FRANCHISE DISCLOSURE DOCUMENT

ZENSHI

Advanced Fresh Concepts Franchise Corp.
a California corporation
19700 Mariner Avenue
Torrance, California 90503
Telephone: 310-604-3200
info@afcsushi.com
www.afcsushi.com

Advanced Fresh Concepts Franchise Corp. ("AFC") will grant you a franchise to use our system to offer prepared sushi and other Asian style foods from one or more (i) Zenshi Counters at a grocery store, retail center or other location that someone else owns ("Zenshi Counter"); (ii) AFC food service counters at a grocery store, retail center or other location that someone else owns ("AFC Food Service Counter"); (iii) Wild Blue Counters at a university or other select locations ("Wild Blue Counter").

The total investment necessary to begin operation of a Zenshi Counter/AFC Food Service Counter/Wild Blue Counter is as follows: (1) if you are a new franchisee, the estimated total investment for one full-time or part-time Zenshi Counter/AFC Food Service Counter/Wild Blue Counter is between $53,704 and $149,790 for a non-AFC operated location and between $54,704 and $249,790if you purchase an existing AFC operated location. This includes $46,479 to $235,390 that must be paid to us; (2) if you are an existing franchisee purchasing an additional full-time or part-time Zenshi Counter/AFC Food Service Counter/Wild Blue Counter, the estimated total investment necessary to begin operation of each additional Zenshi Counter/AFC Food Service Counter/Wild Blue Counter is between $48,769 and $136,160 for a non-AFC operated location and $49,769 and $236,160 for an existing AFC operated location. This includes $43,844 to $224,460 that must be paid to us; (3) if you are an existing franchisee purchasing a self-service Zenshi Counter/AFC Food Service Counter/Wild Blue Counter, the estimated total investment necessary to begin operations is between $4,025 and $20,900. This includes $4,025 to $20,000 that must be paid to us.

This disclosure document summarizes certain provisions of your franchise agreement and other information in plain English. Read this disclosure document and all accompanying agreements carefully. You must receive this disclosure document at least 14 calendar days before you sign a binding agreement with, or make any payment to, the franchisor or an affiliate in connection with the proposed franchise sale. **Note, however, that no governmental agency has verified the information contained in this document.**

You may wish to receive your disclosure document in another format that is more convenient for you. To discuss the availability of disclosures in different formats, contact Vincenzo Calcagni, at 19700 Mariner Avenue, Torrance, California 90503, Telephone: 310-604-3200.

The terms of your contract will govern your franchise relationship. Don't rely on the disclosure document alone to understand your contract. Read all of your contract carefully. Show your contract and this disclosure document to an advisor, like a lawyer or an accountant.

Buying a franchise is a complex investment. The information in this disclosure document can help you make your mind. More information on franchising, such as "A Consumer Guide's to Buying a Franchise," which can help you understand how to use this disclosure document, is available from the Federal Trade Commission. You can contact the FTC at 1-877-FTC-HELP or by writing to the FTC at 600 Pennsylvania Avenue, NW, Washington, D.C. 20580. You can also visit the FTC's home page at www.ftc.gov for additional information. Call your state agency or visit your public library for other sources of information on franchising.

There may also be laws on franchising in your state. Ask your state agencies about them.

FTC Issuance Date: July 31, 2026

How to Use This Franchise Disclosure Document

Here are some questions you may be asking about buying a franchise and tips on how to find more information:

QUESTION	WHERE TO FIND INFORMATION
How much can I earn?	Item 19 may give you information about outlet sales, costs, profits or losses. You should also try to obtain this information from others, like current and former franchisees. You can find their names and contact information in Item 20 or Exhibit M.
How much will I need to invest?	Items 5 and 6 list fees you will be paying to the franchisor or at the franchisor's direction. Item 7 lists the initial investment to open. Item 8 describes the suppliers you must use.
Does the franchisor have the financial ability to provide support to my business?	Item 21 or Exhibit A includes financial statements. Review these statements carefully.
Is the franchise system stable, growing, or shrinking?	Item 20 summarizes the recent history of the number of company-owned and franchised outlets.
Will my business be the only AFC business in my area?	Item 12 and the "territory" provisions in the franchise agreement describe whether the franchisor and other franchisees can compete with you.
Does the franchisor have a troubled legal history?	Items 3 and 4 tell you whether the franchisor or its management have been involved in material litigation or bankruptcy proceedings.
What's it like to be a AFC franchisee?	Item 20 or Exhibit M lists current and former franchisees. You can contact them to ask about their experiences.
What else should I know?	These questions are only a few things you should look for. Review all 23 Items and all Exhibits in this disclosure document to better understand this franchise opportunity. See the table of contents.

What You Need To Know About Franchising *Generally*

Continuing responsibility to pay fees. You may have to pay royalties and other fees even if you are losing money.

Business model can change. The franchise agreement may allow the franchisor to change its manuals and business model without your consent. These changes may require you to make additional investments in your franchise business or may harm your franchise business.

Supplier restrictions. You may have to buy or lease items from the franchisor or a limited group of suppliers the franchisor designates. These items may be more expensive than similar items you could buy on your own.

Operating restrictions. The franchise agreement may prohibit you from operating a similar business during the term of the franchise. There are usually other restrictions. Some examples may include controlling your location, your access to customers, what you sell, how you market, and your hours of operation.

Competition from franchisor. Even if the franchise agreement grants you a territory, the franchisor may have the right to compete with you in your territory.

Renewal. Your franchise agreement may not permit you to renew. Even if it does, you may have to sign a new agreement with different terms and conditions in order to continue to operate your franchise business.

When your franchise ends. The franchise agreement may prohibit you from operating a similar business after your franchise ends even if you still have obligations to your landlord or other creditors.

Some States Require Registration

Your state may have a franchise law, or other law, that requires franchisors to register before offering or selling franchises in the state. Registration does not mean that the state recommends the franchise or has verified the information in this document. To find out if your state has a registration requirement, or to contact your state, use the agency information in Exhibit N.

Your state also may have laws that require special disclosures or amendments be made to your franchise agreement. If so, you should check the State Specific Addenda. See the Table of Contents for the location of the State Specific Addenda.

Special Risks to Consider About *This* Franchise

Certain states require that the following risk(s) be highlighted:

1. **Out-of-State Dispute Resolution.** The franchise agreement requires you to resolve disputes with the franchisor by arbitration only in California. Out-of-state arbitration may force you to accept a less favorable settlement for disputes. It may also cost more to arbitrate with the franchisor in California than in your own state.

2. **Turnover Rate.** During the last 3 years, a large number of franchised outlets were terminated, not renewed, re-acquired, or ceased operations for other reasons. This franchise could be a higher risk investment than a franchise in a system with a lower turnover rate.

Certain states may require other risks to be highlighted. Check the "State Specific Addenda" (if any) to see whether your state requires other risks to be highlighted.

TABLE OF CONTENTS

ITEM		PAGE
Item 1	The Franchisor and Any Parents, Predecessors and Affiliates	1
Item 2	Business Experience	5
Item 3	Litigation	7
Item 4	Bankruptcy	9
Item 5	Initial Fees	9
Item 6	Other Fees	10
Item 7	Estimated Initial Investment	17
Item 8	Restrictions on Sources of Products and Services	23
Item 9	Franchisee's Obligations	25
Item 10	Financing	27
Item 11	Franchisor's Assistance, Advertising, Computer Systems and Training	28
Item 12	Territory	34
Item 13	Trademarks	36
Item 14	Patents, Copyrights and Proprietary Information	39
Item 15	Obligation to Participate in the Actual Operation of the Franchise Business	40
Item 16	Restrictions on What the Franchisee May Sell	41
Item 17	Renewal, Termination, Transfer and Dispute Resolution	41
Item 18	Public Figures	50
Item 19	Financial Performance Representations	50
Item 20	Outlets and Franchisee Information	50
Item 21	Financial Statements	77
Item 22	Contracts	77
Item 23	Receipts	77

EXHIBITS

A. Financial Statements
B. Franchise Application
C. Franchise Agreement
D. Full-Time Location Franchise Addendum
E. Part-Time Location Addendum
F. Self-Service Location Addendum
G. General Release
H. Assignment of Franchise Agreement and Franchisor Consent
I. Asset Sale and Purchase Agreement
J. Food Service Counter Transfer Agreement
K. Promissory Note
L. Table of Contents of Operating Manual, SSOP Manual and Steam Table Manual
M. List of Franchisees, Company Owned Locations, Transfers, Terminations, Non-Renewals, Ceased Operations/Other in Our Last Fiscal Year
N. List of State Administrators and Agents for Service of Process
O. State Specific Addenda
P. Confidentiality Agreement
Q. Tablet and Rice Sheeter Specifications
R. RECEIPTS

ITEM 1 THE FRANCHISOR AND ANY PARENTS, PREDECESSORS AND AFFILIATES

We are Advanced Fresh Concepts Franchise Corp., a California corporation, incorporated on April 30, 2002. To simplify this Disclosure Document, we refer to ourselves as "AFC," "Advanced Fresh Concepts," "we" or "us." We refer to Zenshi Counter(s), AFC Food Service Counter(s), and Wild Blue Counter(s) collectively as "Food Service Counter(s)." We refer to the person or company that buys a franchise from us as "you."

Our immediate parent is Advanced Fresh Concepts Corp. ("AFCC") which granted us a license to use certain trademarks and to grant the use of the trademarks to our franchisees. They were incorporated in California in 1986. We have no other predecessor. We are affiliated with, Advanced Fresh Concepts Pty. Ltd. ("AFCPL"), an Australian entity formed on April 23, 2015 and AFC Distribution Corp. dba Wonderfield Distribution ("AFCDC"), a California corporation incorporated on April 29, 2016.

The business address for us is 19700 Mariner Avenue, Torrance, California 90503, and the business address for AFCC and AFCDC is 19205 South Laurel Park Road, Rancho Dominguez, California 90220. Our phone number is 310-604-3200. Our agent for service of process in California is Incorp Services, Inc. 5716 Corsa Avenue, Suite 110, Westlake Village, California 91362-7354. AFCPL's address is 12/538 Gardeners Road, Mascot NSW 2020, Australia. Please check Exhibit N for agents in other registration states.

We have offered Zenshi Counters in the United States since June 2023. We have offered franchises for AFC Food Service Counters in the United States since May 2002 and in Canada since September 2009. We have offered franchises for Wild Blue Counters in the United States and Canada since June 2021. We have offered Freshly Go Counters under a separate Franchise Disclosure Document, on terms which differ from the terms of this Disclosure Document, since November 26, 2025. Freshly Go Counters offer franchises for prepared fresh-cut fruit and vegetables at a grocery store, retail center or other location that someone else owns. We are not in any other line of business and have not offered franchises in any other line of business. On April 23, 2015, AFCPL was created to offer and sell franchises in Australia. We are the master Franchisor of AFCPL in Australia. AFCPL is not in any other business and has not offered franchises in another line of business.

Other Parent Companies and Affiliates:

Our ultimate parent is Zensho Holdings Co., Ltd. ("Zensho Holdings"), a Japan limited liability company formed on June 30, 1982. Zensho Holdings does not operate franchises in any line of business. The business address for Zensho Holdings is JR Shinagawa East Building 2-18-1, Konan, Minato-ku, Tokyo 108-0075. Zensho Holdings is affiliated with Zensho USA Corporation, Zensho Food Singapore Pte. Ltd., Pocino Foods Company, Mauri Wasabi, Inc., Coco's Japan Co., Ltd., Nakau Co., Ltd. and World Food To Go S.L.

Zensho USA Corporation ("Zensho USA"), AFCC's immediate parent and also our indirect parent is a Delaware corporation formed on January 5, 2015. Zensho USA is a wholly-owned subsidiary of Zensho Holdings. Zensho USA does not operate franchises in any line of business. The business address for Zensho USA is 27261 Las Ramblas, Suite 340, Mission Viejo, California 92691.

Pocino Foods Company ("Pocino Foods"), a wholly owned subsidiary of Zensho USA is a California corporation formed on January 27, 1965. Pocino Foods is an American food manufacturer specializing in premium pastrami and other deli meats, meatballs, and Mexican and Asian-style meats. Pocino Foods ceased manufacturing operations in August of 2025 and is currently in the wind down process with a dissolution date anticipated in November of 2026.

Pocino Foods does not operate franchises in any line of business.

Marui Wasabi, Inc. ("Marui Wasabi"), owned 50% by Zensho- USA since April 1, 2024, is a California corporation formed on August 7, 2000. Marui Wasabi is an importer, manufacturer and distributor of wasabi-based products and other Asian style sauces. AFCDC may purchase products directly from Marui Wasabi and sell those products to our franchisees to be used at Food Service Counters in the future. Marui Wasabi does not operate franchises in any line of business. The business address for Marui Wasabi is 13033 Artic Circle, Santa Fe Springs, California 90670.

Zensho Food Singapore Pte. Ltd. ("Zensho Food"), a Singapore limited liability company formed in 2012, is a franchisee of Long John Silver's, LLC. As of March 2026, Zensho Food operated 16 Long John Silver's restaurant locations in Singapore. Long John Silver's restaurants offer fried seafood and chips in a quick-serve restaurant environment. The business address of Zensho Food is 25 Tai Seng Avenue, #04-01 Cityneon Building, Singapore.

Coco's Japan Co., Ltd. ("Coco's"), a Japan limited liability company, formed on April 5, 1978, is a franchisor of Coco's restaurants in Japan. As of March 2026, Coco's had 76 franchised restaurants in Japan. Coco's restaurants offer a variety of signature soups, hamburgers, salads and combination dinners, in a full-service family-style environment. The business address of Coco's is the same as Zensho Holdings. Coco's has offered franchises since 1984.

Nakau Co., Ltd. ("Nakau"), a Japan limited liability company formed in 1966, is a franchisor of Nakau restaurant locations in Japan. As of March 2026, Nakau had 5 franchised locations in Japan. Since March 2005, Nakau has operated as a subsidiary of Zensho Holdings. Nakau restaurants offer donburi (rice bowls) and Kyoto-style udon noodles, in addition to other items, in a fast-food environment. The business address of Nakau is the same as Zensho Holdings. Nakau has offered franchises since 1989.

YO! Sushi UK Limited, ("YO!"), a UK limited company formed on November 24, 1994, is wholly owned by YO! Sushi Limited, which is ultimately a wholly owned subsidiary of Zensho Holdings. YO! operates a combination of franchised and company owned sushi counters in the United Kingdom under the brand YO! Sushi. As of March 2026, there were 478 franchised locations in the United Kingdom, and 38 corporately owned kiosks. In addition to operating sushi counters, YO! also operates a number of company owned Japanese food restaurants in the United Kingdom, and franchised restaurants which are located across Australia, France, the Netherlands, Norway, Spain, Italy, Turkey and the United Arab Emirates. There are no franchised YO! food restaurants in the United States or Canada. As of March 2026, there were 34 company operated YO! food restaurants in the United Kingdom, and there were 15 franchised restaurants globally. The business address of YO! is Fourth Floor, 69 Wilson Street, London, EC2A 2BB, United Kingdom.

JFE Franchising, Inc, ("JFE"), a Texas corporation formed on August 21, 2013, is wholly owned by Snowfox US Holdco Inc., which is ultimately a wholly owned subsidiary of Zensho Holdings. JFE has offered franchised sushi counters in the United States since October 2013 under the brand Snowfox. As of March 2026, there were 1,456 franchised Snowfox locations in the United States. In addition to operating sushi counters, JFE operates 1,021 franchised fresh cut fruit, vegetable and salad within many of the same locations as the franchised sushi counters. As of March 2026, JFE had 2,477 franchised locations in the United States. The business address of JFE is 2021 Bingle Road, Houston, Texas, 77055.

Snowfox (Ireland) Limited ("Snowfox Ireland"), an Irish registered limited company formed on June 19, 2023, is wholly owned by Snowfox Midco 1 Limited, ultimately a wholly owned subsidiary of Zensho Holdings. Snowfox Ireland operates franchised sushi counters in the Republic of Ireland under the brand Snowfox. As of March 2026, there were 11 franchised Snowfox locations in the Republic of Ireland. The business address of Snowfox Ireland is Beaux Lane House. Mercer Street Lower. Dublin 2, Dublin, Republic of Ireland.

Bento Sushi Franchise Inc ("BSFI"), a Delaware corporation formed on April 12, 2016, is a wholly owned subsidiary of Zensho Holdings, is in the business of selling franchises and developing branded products under the name "BENTO SUSHI." BSFI's primary business is offering and selling franchises in the United States. BSFI operates a franchise distribution system under a License Agreement dated April 29, 2016 with Bento Inc., an affiliate of BSFI. As of March 2026, BSFI had 61 franchised locations. The principal place of business of BSFI is 2136 S Peoria St., Chicago, IL, 60608.

Bento Inc ("BI"), an Ontario business corporation formed on November 20, 2017, is ultimately a wholly owned subsidiary of Zensho Holdings. BI has operated company-owned Bento Sushi outlets, and subcontracts other Bento Sushi outlets in Canada since 1996. These outlets are similar to the franchised outlets offered in this disclosure document. As of March 2026, BI had over 218 company-owned and subcontracted outlets in Canada. In addition, BI operates 4 commissary, central production kitchens, servicing over 1,500 locations. The principal place of business of BI is 25 Sims Crescent, Unit 1, Richmond Hill, Ontario, L4B 1C9.

Bento Nouveau Inc ("BNI"), a Delaware corporation formed on October 5, 2005, is ultimately a wholly owned subsidiary of Zensho Holdings. BNI operates in the United States only. It has operated company-owned Bento Sushi outlets that are similar to the franchised outlets offered in this disclosure document since 2005. BNI also operates 6 commissary, central production kitchens, in the United States, servicing over 750 locations. The principal place of business of BNI is 2136 S Peoria St. Chicago, IL, 60608.

Bento Sushi Franchise Ltd. ("BSFL"), an Ontario business corporation formed on May 22, 2013, is ultimately a wholly owned subsidiary of Zensho Holdings. BSFL offers franchises for Bento Sushi outlets in Canada, consisting primarily of Sushi Counter front and inline units in malls, hospitals, and universities. BSFL has offered Bento Sushi franchises in Canada since May 2013. As of March 2026, BSFL had 342 franchised units in operation in Canada. BSFL does not operate a business of the type to be operated by you.

Bento Sushi USA, Inc. ("Bento USA"), a Delaware corporation formed on August 19, 2020, is ultimately a wholly owned subsidiary of Zensho Holdings. Bento USA offers franchises for retail sushi businesses in the State of Hawaii under the name and marks "BENTO SUSHI." Bento USA has offered Bento Sushi franchises since July of 2021. As of March 2026, Bento USA had 42 franchisees in Hawaii and no company-owned locations. The principal place of business of Bento USA is 2136 S Peoria St. Chicago, IL, 60608.

Burger One Co., Ltd, (formally known as Lotteria Co. Ltd., changed its name on February 16, 2026) is a wholly owned subsidiary of Zensho Holdings, Ltd. and franchisor of Zetteria hamburger chain locations in Japan. As of March 2026, Zetteria had 51 franchised locations in Japan under the brand Zetteria. Zetteria offers a variety of classic and unique burger options, fries, drinks, and other fast-food items. The business address of Zetteria is JR Shinagawa East Building, 2-18-1 Konan, Minato-ku, Tokyo, Japan.

World Food To Go S.L. ("World food To Go"), owned 70% by Zensho EU Corporation, which is also a wholly owned subsidiary of Zensho Holdings, is a Spanish corporation formed on March 10, 2015. World Food To Go operates takeout sushi stands in Spain and, through its wholly owned subsidiaries SushiTake S.R.L., SushiTake S.L.U., SushiTake SIA, SushiTake OY and SushiTake AS, it operates sushi stands in Italy, Andorra, Latvia, Finland, and Norway respectively. As of March 2026, there were 99 franchised locations in Spain, 11 franchised location in Italy and 14 franchised locations in Norway. The Business address of World Food To Go is Avenida De las Nieves 11, 28935 Móstoles, Madrid, Spain.

Other than stated above, Zensho Holdings, Zensho USA, Zensho Food, Pocino Foods, Mauri Wasabi, Coco's, Nakau, YO!, JFE, Snowfox Ireland, BSFI, BI, BNI, BSFL, Bento USA, Burger One, and World food To Go are not in any other line of business and do not currently offer franchises in any other line of business.

The Franchised Business

Our business is granting franchises to let people, like you, operate Zenshi Counters, AFC Food Service Counters, and Wild Blue Counters, which offer prepared sushi and other Asian style foods. Sometimes, due to arrangements with the facility owner, you will operate your Food Service Counter under a different name, or a generic name.

Originally, our franchises emphasized sushi and this continues to be an important part of the franchise. Since approximately September 2005, we broadened our emphasis and now describe ourselves as food service counters. We are not in any other business and haven't offered franchises in any other business. We offer three types of franchises—full-time food service counters, part-time food service counters and self-service food service counters.

Full-time Food Service Counters allow you to operate a Food Service Counter as a department of a retail supermarket or in another kind of location, like a college campus or arena on a full time basis.

In some instances, we may permit you to operate at these facilities on a part-time basis. In part-time locations, you are not required to be personally present or have a manager personally present at the Food Service Counter more than four hours per day. We currently only permit franchisees to operate a part-time location if they already own a full time Food Service Counter.

Self-service Food Service Counters are available only to selected franchisees who already operate a full-time or part-time Food Service Counter with us. Under the self-service franchise, you service a supermarket or other location's sushi and/or other prepared food needs from your existing location. You do not have to be physically present at the self-service location during all hours of operation. It is your responsibility to prepare the prepared foods (such as sushi, roll n' wraps and other foods in our system) at your full-time or part-time Food Service Counter and deliver it at least once daily to your self-service location.

To purchase a Food Service Counter, you must sign our form franchise agreement and a separate addendum for each location to be opened by you. All the addendums are controlled by one franchise agreement.

Under each type of franchise, customers pay the facility owner for their purchases and sales are recorded in the facility owner's cash registers and then reported to us. The facility owner and we keep a percentage of your gross sales. We then return the remainder to you less amounts we deduct for other charges to you. At most locations, you will not use a cash register. At other locations, cash registers will be provided by the location owner for your use (See Items 6 & 11.) We also operate Food Service Counters that are similar to the ones you will operate. See Exhibit M. We are not in any other business.

We have agreements to operate Food Service Counters as separate departments of supermarkets and other venues. In many instances we perform the agreement by us granting you a franchise, so you can operate the Food Service Counter. We enter into agreements with location owners. Entering into a franchise agreement with you to operate at that location enables us to satisfy the agreement. We will tell you available locations when we meet.

Our affiliate AFCPL offers franchises similar to the ones you will operate outside the United States and Canada. As of March 31, 2026, AFCPL had 223 franchised and 189 company owned locations in Australia. AFCPL is not in any other line of business and does not offer franchises in any other line of business.

Our affiliate AFCDC fulfills and ships franchisee orders, is our logistics provider for product shipments sold to you and sells products to third parties. AFCDC is not in any other line of business and does not offer franchises in any line of business.

There is an existing market for sushi and other prepared food products at stand-alone Food Service Counters and restaurants, and also at grocery stores. You will sell prepared foods mainly to customers who shop at the grocery store or visit the venue where your Food Service Counter is located. Customer traffic will be generated primarily by the facility and its owner. You are only permitted to sell your prepared food products at the Food Service Counter(s) we designate. The facility owner has the right to sell competing products at other locations in the facility. The market for sushi and other food products is fairly developed and is enjoyed by customers year round.

You must comply with federal and state laws on operating a restaurant, health, safety and sanitation laws which also include health department inspections, and menu and food labeling laws. This also includes the Hazard Analysis and Critical Control Point ("HACCP") food safety program adopted by the U.S. Food & Drug Administration, and rules on handling, preparing and serving foods by people with communicable or infectious diseases. Your Food Service Counter may also be subject to laws on disposing hazardous wastes. Some states have laws requiring you to employ a person who is certified in food safety. See Exhibit O for state specific laws that may apply to you.

As an employer, you must comply with laws on minimum wages, overtime, maximum working hours, working conditions, unlawful discrimination, restricting employment of children and other labor laws and the Department of Homeland Security's E-Verify program, if required by the facility owner.

You will compete with quick service restaurants and other food alternatives where your Food Service Counter is located. You will also compete with company owned stores (if any are located near you, see Item 20), other Food Service Counters, restaurants and people's other choices for dining and shopping for food.

ITEM 2 BUSINESS EXPERIENCE

President, Chief Executive Officer and Director: Vincenzo Calcagni

Mr. Vincenzo Calcagni has been our President, Chief Executive Officer and Director in Torrance, California since May 2025. Mr. Calcagni served as our General Manager of Operations in Torrance, California from October 2022 to May 2025. Mr. Calcagni was unemployed from March 2022 to October 2022. Mr. Calcagni served as Vice President of Operations for Yoshinoya America in Torrance, California from March 2017 to March 2022.

Treasurer and Director: Noriyuki Honda

Mr. Honda has been our Treasurer and a Director in Torrance, California since April 1, 2026. Mr. Honda served as our Senior Vice President of Product Management & Fruit in Torrance, California from July 2025 to March 2026. Mr. Honda served as Senior Vice President of Product for our affiliate, JFE Franchising, Inc in Houston, Texas from April 2024 to June 2025. Mr. Honda served as our General Manager of Product Management in Torrance, California from June 2022 to March 2024. Mr. Honda served as our General Manager of Research and Development in Torrance, California from August 2021 to June 2022. Mr. Honda served as Chief Operating Officer for Zensho Food Indian Private Limited in Delhi, India from April 2019 to June 2021.

Corporate Secretary: Luciana O'Brien

Ms. O'Brien has been our Corporate Secretary in Mission Viejo, California since April 1, 2026. Ms. O'Brien has been General Counsel and Corporate Secretary for Zensho USA Corporation, in Mission Viejo, California since June 1, 2015.

Executive Director of Research and Development: Masahiko Tajima

Mr. Tajima has been our Executive Director of Research and Development in Torrance, California since May 2025. Mr. Tajima was our General Manager of Research and Development in Torrance, California from June 2022 to May 2025. Mr. Tajima served as our General Manager of Product Development in Torrance, California from January 1, 2021 to June 2022.

Director of Corporate Training: Gerardo Siordia Posadas

Mr. Posadas has been our Director of Corporate Training in Torrance, California since April 2026. Mr. Posadas served as our Director of Legal and Compliance in Torrance, California from May 2025 to April 2026. Mr. Posadas was our General Manager of Compliance in Torrance, California from July 2020 to May 2025.

Vice President of Fruit Business and Process Improvement: Mario Garcia

Mr. Garcia has been our Vice President of Fruit Business and Process Improvement in Torrance, California since December 2025. Mr. Garcia served as Vice President of Operations for Everytable in Los Angeles, California, from March 2023 to December 2025. Mr. Garcia was unemployed from October 2022 to March 2023. Mr. Garcia served as Director of Operations for Yoshinoya, in Los Angeles, California, from March 2016 to October 2022.

Vice President of Business Development & Marketing: Michelle Narain

Ms. Narain has been our Vice President of Business Development & Marketing in Torrance, California since May 2025. Ms. Narain was unemployed from March 2025 to April 2025. Ms. Narain served as Vice President of Sales & Marketing for Sofidel in Horsham, Pennsylvania from November 2024 to February 2025. Ms. Narain served as Vice President of Sales & Marketing for Clearwater in Spokane, Washington from February 2022 to October 2024. Ms. Narain was unemployed in January 2022. Ms. Narain served as Vice President of Private LAbel for Smart & Final in Commerce, California from May 2018 to December 2021.

Senior Vice President of Operations: Eddie Y. Fujita

Mr. Fujita has been our Senior Vice President of Operations in Torrance, California since April 2025. Mr. Fujita was our Deputy General Manager in Torrance, California from February 2021 to March 2025.

Director of Regulatory and Compliance Affairs: Chuong V. Hoang

Mr. Hoang has been the Director of Regulatory and Compliance Affairs in Torrance, California since April 2026. Mr. Hoang served as our Legal Manager in Torrance, California from May 2022 to April 2026. Mr. Hoang served as our Legal Supervisor in Torrance, California from September 2006 to May 2022.

Vice President of Product Management: Sean Acre

Mr. Acre has been our Vice President of Product Management in Torrance, California since August 2025. Mr. Acre served as Operations Manager for Yoshinoya America in Torrance, California from November 2019 to August 2025.

Vice President of Financial Planning & Analysis: Yoshiya Kohda

Mr. Kohda has been our Vice President of Financial Planning & Analysis in Torrance, California since August 2025. Mr. Kohda served as our Vice President of Product Management in Torrance, California from April 2025 to August 2025. Mr. Kohda served as our Deputy General Manager of Product Management in Torrance, California from April 2023 to March 2025. Mr. Kohda served as our Division Manager of Field Operation in Torrance, California from August 2022 to March 2023. Mr. Kohda served as our Regional Manager of Field Operation in Torrance, California from March 2021 to July 2022.

Vice President of Food Safety and Quality Assurance: Lewis Ennist

Mr. Ennist has been our Vice President of Food Safety and Quality Assurance in Torrance, California since January 5, 2026. Mr. Ennist served as Vice President of Regulatory and Compliance for DrinkPAK, LLC in Santa Clarita, California from March 2023 to January 2026. Mr. Ennist served as Vice President of Quality for DrinkPAK, LLC in Santa Clarita, California from January 2020 to March 2023.

ITEM 3 LITIGATION

PENDING LITIGATION:

A. Pending Cases We Brought Against Franchisees in Fiscal Year Ending March 2026:

None

B. Cases Pending Against Us:

Claim of The People of the State of California

The People of the State of California v. Advanced Fresh Concepts Franchise Corp., Advanced Fresh Concepts Corp., Ace Sushi Franchise Corp., Asiana Management Group, Inc., Fujisan Franchising Corp., Fuji Food Products, Inc., et al. (Superior Court of California, County of San Diego, Case No. 26CU033252C, filed June 17, 2026). The State of California (San Diego County Counsel), brought claims against Advanced Fresh Concepts Franchise Corp. ("AFC Franchise"), Advanced Fresh Concepts Corp. ("AFCC"), and other defendants, asserting that defendants improperly classified certain franchisees as independent contractors rather than employees. The complaint contains claims for unfair business practices and for alleged violations of California labor laws. The allegations state that defendants improperly charged fees and made deductions from compensation of allegedly misclassified independent contractors, that defendants failed to pay minimum wage and overtime wages, provide meal and rest breaks, reimburse business expenses, provide paid sick time, or wage statements, and for recovery of waiting time penalties. AFC Franchise and AFCC deny the allegations and intend to vigorously defend the action. As of the issuance date of this Disclosure Document, AFC Franchise and AFCC were only recently served, and the matter was pending.

CONCLUDED LITIGATION:

Claim of P. Mung

Pau Sian Mung v. Advanced Fresh Concepts Franchise Corp. (United States District Court, Northern District of Georgia, Case No. 1:23-cv-04154, removed September 14, 2023 – "District Court Lawsuit"); Pau Sian Mung v. Advanced Fresh Concepts Franchise Corp. (Superior Court of Newton County, State of Georgia, Case No. SUCV2023001844, filed August 11, 2023 – "State Court Lawsuit"); and P. Mung v. Advanced Fresh Concepts Franchise Corp. (American Arbitration Association, Case No. 01-23-0004-3850, initiated October 5, 2023 – the "Arbitration"). On July 21, 2023, AFC terminated its franchise agreement with Pau Sian Mung ("Claimant") pursuant to the provisions of the franchise agreement based on Claimant's unlawful trespass onto another franchise operator's premises and theft from another franchise operator. On August 11, 2023, Claimant initiated the State Court Lawsuit. On September 14, 2023, AFC removed the State Court Lawsuit to District Court Lawsuit. After AFC filed its motion to dismiss or stay the District Court Lawsuit pending arbitration, Claimant stipulated to a stay of the District Court Lawsuit and the District Court entered an order staying the matter pending an award issued in arbitration. On October 5, 2023, Claimant initiated the Arbitration with the American Arbitration Association ("AAA"). Claimant's arbitration demand asserted his franchise agreement was wrongfully terminated by AFC and claimed causes of action for breach of contract and breach of the covenant of good faith and fair dealing. Claimant's arbitration demand sought damages "in excess of $150,000." On March 1, 2024, Claimant dismissed without prejudice the District Court Lawsuit against AFC. On March 8, 2024, the Arbitration was dismissed without prejudice by AAA because Claimant failed to pay AAA the deposit amount of $1,250.00.

Claim re Pau Sushi Catering, LLC

Pau Sushi Catering, LLC v. Advanced Fresh Concepts Food Services Corp. (American Arbitration Association, Case No. 01-19-0001-4357, filed May 10, 2019). Pau Sushi Catering, LLC ("Claimant") operated an AFC Food Service Counter within a Publix Supermarket in the Orlando, Florida, area until July 19, 2018. Claimant's franchise agreement was terminated when we discovered Claimant's operations violated our zero tolerance policy for using carbon monoxide treated tuna in products at Publix Supermarket locations. Claimant's arbitration demand contends the immediate termination amounted to a breach of the franchise agreement by us and that our actions also constituted fraud, negligent misrepresentation, unlawful business practices and racial discrimination, among other claims. Claimant asserted its damages exceeded$ 500,000. The arbitration was initiated on May 10, 2019. On August 4, 2020, Claimant and AFC agreed in writing to resolve the arbitration for mutual general releases and the dismissal of the arbitration with prejudice. On August 17, 2020, the arbitration was ordered closed based on the August 4, 2020 agreement.

Claim of Cherry Lee

Cherry Lee v. Soe Tun and Advanced Fresh Concepts Food Services Corp. (Contra Costa County Superior Court Case No. C18-01063, filed May 23, 2018, dismissed with prejudice on January 7, 2019). Plaintiff was employed as a sushi chef by our franchisee, Soe Tun, between August 2017 and February 2018. On May 23, 2018, Plaintiff initiated this action against our former affiliate, Advanced Fresh Concepts Food Service Corporation ("AFCFSC") and Soe Tun alleging claims for hostile work environment, retaliation, failure to prevent harassment/retaliation, negligent supervision, sexual battery and a violation of section 226 of the Labor Code. The full scope of the alleged damages was uncertain but included claims for emotional/physical distress and approximately 3 months of lost income of $1,600 per month. Plaintiff's principal theory against AFCFSC was based on Soe Tun's and AFCFSC's alleged joint employment with Soe Tun of Plaintiff. Soe Tun and AFCFSC answered the complaint and denied the allegations. On December 21, 2018, Plaintiff executed a settlement agreement and agreed to settle her dispute for a total payment of $5,000.00 in exchange for a dismissal with prejudice of AFCFSC, general release of AFCFSC and all its affiliated entities, including Advanced Fresh Concepts Corp. and an express acknowledgement in writing that the settlement did not constitute any evidence or admission of wrongdoing by AFCFSC. The dismissal with prejudice of AFCFSC was entered on January 7, 2019.

Claim of Pilrang Owa

Advanced Fresh Concepts Franchise Corp. v. Pilrang Owa d.b.a. Sakura Foods Everett L.L.C. (American Arbitration Association Case No. 01-16-0002-8871, Los Angeles, California, filed July 19, 2016). We initiated an arbitration proceeding against Pilrang Owa doing business as Sakura Foods Everett L.L.C. ("Owa") seeking an order finding and declaring Owa owned and operated an AFC Food Service Counter by and through her own, independently run company, Sakura Foods Everett, L.L.C. and therefore was not our employee ("Owa Arbitration"). We did not seek damages with respect to the relief requested, but recovery of all fees and costs incurred for the dispute. Thereafter, Owa filed a counter-claim against us in the arbitration proceeding seeking $6.8 million dollars in damages. We filed the arbitration demand after learning that Owa filed a motion to amend her complaint in the action entitled *Pilrang Bae Owa v. Fred Meyer Stores, et al.* (Superior Court of Washington for King County, Case No. 16-2-09786-3 SEA, filed April 16, 2016 - the "State Court Action") to include us as a defendant on the basis that she was allegedly our employee. Owa contended in the State Court Action that we discriminated against and harassed her when conducting inspections of her franchise operation and by sending her notices to cure breaches of the franchise agreement. Owa claimed the discrimination and harassment was based on a protected classification in violation of Washington state laws and, based thereon, sought unspecified amounts of monetary damages. We contended Owa signed a franchise agreement with us whereby she was an independent business owner that operated a Food Service Counter and was not our employee. On August 5, 2016, Fred Meyer Stores removed the State Court Action to the U.S. District Court, Western District of Washington (Case No. 2:16-cv-01236 – the "First District Court Action"). On September 9, 2016, we moved to compel arbitration of Owa's claims in the First District Court Action. On November 28, 2016, Owa filed a separate virtually identical action in the U.S. District Court,

Western District of Washington (Case No. 2:16-cv-01832 – "Second District Court Action"). On December 15, 2016, the court granted our motion to compel resolution of all claims between the parties within the Owa Arbitration, stayed the First District Court Action pending the results of the Owa Arbitration and dismissed the Second District Court Action. On November 28, 2017, the arbitrator issued a comprehensive final award in our favor and against Owa ("Final Award"). The Final Award included an award of attorney's fees and costs to us in the amount of $373,126.98. On May 29, 2018, the District Court confirmed the Final Award and entered it as a judgment in our favor. On June 23, 2018, Owa appealed the arbitrator's ruling to the Ninth Circuit Court of Appeals, Case No. 18-35531. On October 5, 2018, AFC and Owa reached an agreement to settle their dispute and executed a formal settlement agreement on October 16, 2018, whereby Owa would dismiss her appeal with prejudice, AFC would execute a satisfaction of judgment as to the Final Award for filing in the First District Court Action and, except as to the judgment entered in the First District Court Action, the parties would mutually and generally release each other. On November 20, 2018, an order entering Plaintiff's dismissal of her appeal was entered and AFC conveyed the satisfaction of judgment form to Plaintiff for her filing and use in the First District Court Action with respect to the Final Award.

Other than these actions, no litigation is required to be disclosed in this Item.

ITEM 4 BANKRUPTCY

No bankruptcies are required to be disclosed in this Item.

ITEM 5 INITIAL FEES

If you are a new franchisee obtaining a full time location, you pay us an initial franchise fee of $6,250. In addition, we require you to submit to drug testing, a criminal background check, and/or Tuberculosis testing. You reimburse our costs to obtain these tests and checks, estimated at $150 to $1,000. You also pay us a $100 - $500 credit and background check fee when turning in your application, up to $2,300 for our training program for each of your principal owner(s), up to $2,300 for each manager you bring with you to the initial training, and a manual lease fee of up to $600 for each full service or part time Food Service Counter to be opened. You pay the drug, tuberculosis and criminal background test fee and/or the cost of other testing required by the facility owner after the tests/check is completed through deduction from your commissions. From our approved supplier or us, you are required to obtain the ServSafe® Food Protection Manager Certification (for you and your managers), at a cost of $75 to $500 per certification, and the ServSafe® Allergen Certification, at a cost of $10 to $30 per certification.

If you are an existing franchisee with us obtaining a self-service or part-time franchise in addition to your existing full time location, there is currently no initial franchise fee for the self-service or part-time location (although we can implement such a fee in the future). If you want to open an additional full time location, we charge the following for each additional full time location to be operated pursuant to your franchise agreement:

Number of Months Remaining on Your Franchise Agreement (on effective date of the addendum)	Initial Fee Per Location
48-60	$6,250
36-47	$5,000
24-35	$3,750
12-23	$2,500
Less than 12	$1,250

You pay the initial franchise fee in a lump sum on signing each full time location addendum. There are no refunds or prorations if a location starts as a full time location and later is transformed into a self service or part-time location. However, if a location starts as a self service or part-time location and is transformed into a full time location, then you must pay our then current initial franchise fee for the full time location.

If you purchase a Food Service Counter under this Disclosure Document and a Freshly Go Counter under our separate franchise disclosure document simultaneously, we will reduce your Food Service Counter initial franchise fee to $5,000.

If you fail to complete our training program to our satisfaction or if you fail any required drug, tuberculosis or other chemical and disease testing and/or criminal background investigation, we may cancel the franchise agreement.

Before opening, we require you to purchase a label machine consisting of a tablet, scale and printer and warranty* ranging from $1,300 to $1,800 for each Freshly Go Counter you propose to open, plus shipping costs ranging from $10 to $100. You must also purchase pricing labels which are compatible with the label equipment. The cost of a set of labels is currently $152 per box (25 rolls), for an 800-count self-adhesive labels per roll, but may increase to $320 per box upon notice. Based on the number of products sold, the label cost will range from $456 to $960 over the first 3 months. The cost of the label machine will vary, depending on the type of tablet, scale, printer and warranty you decide to purchase in accordance with the requirements in the manual. We also require you to purchase equipment and small wares costing up to $46,000, opening food inventory which depending on what you order can range from $10,400 to $31,200 at a full-time or part-time service location and $1,625 to $6,500 at a self-service location, scanner costing up to $500, ongoing inventory which for 3 months can range from $6,500 to $23,400 at a full-time or part-time service location and $1,300 to $6,500 at a self-service location, signage which depending on your location can cost up to $1,000, up to $1,800 in opening assistance fees if we stay at your location 4 additional days beyond the first 3 for on-site training and up to $350 for four additional sets of uniforms.

None of these fees is refundable. Except as indicated above, these initial fees are uniform to all new franchisees, though we may change them in the future.

If you are an entity, each of your owners who are individuals must sign a personal guaranty. The guaranty is on the signature page of the franchise agreement and each applicable addendum.

If you purchase an existing location from us, we will charge you $1,000 to $100,000 for the Food Service Counter business, assets, equipment and value of the established market of the Food Service Counter, as we determine at our sole discretion.

We may finance some of the initial franchise fee(s) and various other expenses that you incur with us. (See Item 10.)

* These items are not required when you purchase a self-service franchise, because you already have these items in your full-time or part-time location.

ITEM 6 OTHER FEES (1)

Name of Fee	Amount	Due Date	Remarks
Compensation to Franchisor (2), (3)(4)	Varies. Typically 25% to 27% of Gross Sales to the store or other facility where you are located, and 8% to 11% of Gross Sales to us. (2)(4)	Monthly	Our (or our parent's) agreement with the store says they keep a percent of your gross sales (25%, for example). We keep a percent (8%, for example). We return the rest to you (typically, 67%) less amounts we deduct for other charges to you. These percentages can vary, but the amount paid to us will generally not exceed 11% of Gross Sales. See Footnotes 3 & 4.

Name of Fee	Amount	Due Date	Remarks
Banners, logo items and displays (3)(5)	Actual cost	After ordered	These are items like umbrellas or carved wood signs. Prices vary depending on the type of item and supplier. You pay us if you buy these optional items from us.
Additional Training (3)	Up to $2,300 per person	After training	If you elect and request us to train your managers at our headquarters or other location we designate. This fee will vary, depending on whether you request us to train your manager(s) in both steam table and sushi training or only sushi training.
On-site additional Training (3)	Up to $450 per day	After training is completed	If we go to your site to train you and/or your managers.
Failure to Attend Additional Training (3)	$250	Payable if you fail to attend required training	If you fail to attend any required training, we may assess this fee and deduct it from commissions payable to you.
ServSafe® Food Protection Manager Training and Certification (3)(6)	$75 - $500 per certification	After course is taken	Charge for training and certificate for you or your managers, if we offer the training program instead of our approved supplier.
ServSafe® Allergen Certification (3)(6)	$10 - $30 per certification	After course is taken	Charge for training and certificate for you or your managers, if we offer the training program instead of our approved supplier.
Testing and Criminal Background Checks (3)	$150 - $1,000 per person. Typically, around $100 per person (if only background check required).	After test/check is completed	Charge for conducting drug and tuberculosis tests and criminal background checks on you and your personnel.
Manuals Lease Fee (3)	Up to $600 for each full-time or part-time Food Service Counter you operate	After manuals provided.	You pay a lease fee of $100 for the Operating Manual, $100 for the Standard Sanitation Operating Procedure and Methods Manual, up to $200 for the Sushi Recipe Guide and $100 for the Steam Table Operating Manual and Wild Blue Recipe Guide (if applicable to you) for each full or part time location you operate. The fee is refunded when you return the manuals to us within 30 days of the expiration or termination of your location. Otherwise, there is no refund.

Name of Fee	Amount	Due Date	Remarks
Customer Satisfaction Fee (3)	Up to $1,000 per complaint	On demand	Charge to compensate us for our efforts in addressing and resolving customer complaints against you or your franchise.
Account Broker Fee	$100 - $500 per quarter for each Food Service Counter you operate.	Quarterly	If we pay a fee for the right to locate the Food Service Counter in the facility or store, you reimburse us for the amounts paid, not to exceed $500 per quarter for each Food Service Counter subject to this fee.
Additional Uniforms (3)	Up to $350	On demand	If you want to purchase additional uniforms. Cost is for four sets of uniforms.
Default Charge (3)	Up to $2,000 per default	On request	You pay this fee if you default on your obligations as specified in the operating manuals or franchise agreement.
System/Data Charge (3)	Up to $150 per month (currently $77.00 per month) for each Food Service Counter you operate, with the right to increase the maximum fee by 10% annually.	Monthly	You pay this fee to gain access to our website pages that let you submit purchase orders online as well as information on new products, product specifications, tablet data and other information. This fee also includes access to our inventory tracking software, which lets you and us track the daily inventory of products made at your Food Service Counter.
Pricing Labels (3)	Our actual cost incurred (estimated to be $500 per item for which price is changed)	When you decide to charge different prices requiring us to print special price labels	To charge prices that differ from pricing we print on labels, the label machine must be reprogrammed. You pay or reimburse the amount charged to us by the vendor for our computer programming to print labels with pricing you want.
Product Purchases – Ancillary Charges (3)	Actual cost	After shipping	You buy food and other items from us, our parent, our affiliate or authorized suppliers. You also pay freight, and other ancillary charges.
Extended Producer Responsibility Fee (EPR)	Up to $2000 per month	If and when required by your state's regulator	Based on the Extended Producer Responsibility ("EPR") laws in certain states that require collection of this fee, we will require you to reimburse us for our payment of this fee, subject to state law. Only certain states have laws that regulate paper, plastic and packaging, which currently include California, Colorado, Michigan, Oregon and Maine.

Name of Fee	Amount	Due Date	Remarks
Reimbursement for Employee Wages Paid (3)	Actual cost	If and when required by the facility owner.	If the facility owner, due to labor contracts or otherwise, requires your Food Service Counter(s) employees to be employed directly by the facility owner, and we are asked to reimburse the facility owner for these employment costs, we will then deduct such payments from the amounts due to you.
Transfer Fee (3)	$1,500 per location	When you ask us to consent.	You must pay us this fee for each location to be sold.
Transfer to Entity Fee (for individuals wishing to transfer their interest in the franchise agreement to a newly formed entity controlled by them) (3)	No charge for first request to transfer to entity. $250 for each subsequent request.	When you desire to transfer your interest in this agreement to an entity you control.	You must pay us this fee each time you seek our consent to you transferring your interest in the franchise agreement to another entity controlled by you.
Renewal Fee (3)	$6,250 for each location	When you renew your agreement for another term.	You pay this fee to renew your agreement for another term.
Audit (3)(7)	1% per month (12% per year) interest on unpaid amounts; cost of audit	When we request, following the audit	You pay this if an audit by us indicates a discrepancy in your books or under-reporting of sales by 1% or more for any period.
Management Fee (3)	Up to $500 per day per person we send	As incurred or upon determination.	If we are requested or determine we need to operate your Food Service Counter due to default or breach, or upon death or permanent disability of one of your owners and you do not immediately appoint a new individual to operate your Food Service Counter.
Paper Check Fee (3)	up to $20 per month	On demand	We make all payments to you via direct deposit. You will receive monthly statements via email or you may access the monthly statements online using the AFC Connect portal. In rare circumstances, we may need to send your commissions via a manual check. In those circumstances, we will send these via UPS at a cost of up to $20 per month or at your option via regular mail .
Shipping Administrative Fee (3)	Up to 2 ½% of total purchase price	On demand	We charge this fee to defer our administrative and other costs of shipping products to your Food Service Counter.
Insurance (3)(8)	Varies	When we request.	If you don’t get insurance we require, then we can get it for you (though we don’t have to) and you must pay for the insurance or reimburse us or we can deduct the cost from amounts we owe you.

Name of Fee	Amount	Due Date	Remarks
Indemnification (3)	Actual cost	On demand.	You indemnify us concerning your Food Service Counter and all government imposed taxes, fees, charges, fines, and penalties imposed on your operations.
Expenses Caused by Breach (3)	Actual cost	On demand	You must pay us all expenses we incur due to your breach or default.
Request for Approval of New Product, Supplier or Vendor (3)(9)	$1,000 plus our out of pocket investigation expenses	If requested	If you request to sell a non-approved product, or use a non-approved supplier or vendor, you pay our investigation expenses and a fee of $1,000.
Mailing and Reproduction Costs (3)	Varies	On demand	If we send you materials such as manuals or marketing materials for your location, we may charge you a reproduction, service and handling charge up to $100 per shipment.
Warranty Service for Labeling Machine (3)	Varies, currently $99 for the first two years or $199 for the first three years	On demand	To renew your labeling machine warranty after the first two or three years of operation, respectively.
Lab Test (3)	Up to $500 per sample tested	On demand	If we order a lab test to examine food in your facility, you must pay up to $500 for each sample tested.
Early Termination Fee (3)	$1,500 per location	On demand	If you abandon any location or if your franchise agreement or any addendum is terminated before the end of the term, we can assess this fee against you for each location terminated or abandoned.
Advertising Cooperative Fee	Varies	On demand	If an advertising cooperative is formed in your area, you must participate in and contribute to the cooperative according to its procedures.
Advertising Contribution Fee	Actual costs	When we request, following initiation of the campaign	If we conduct any regional or national advertising campaigns, any geotargeted marketing campaigns, or national news and weather campaigns for your brand, we can bill you your pro-rata share of such advertising. We may absorb some of the cost, but have no obligation to do so.
Administrative Fee (3)	Up to $100 per garnishment/levy request	On demand	Reimbursement for our costs and expenses for complying with tax levies and wage garnishments issued against you or your owners.
Promissory Note Payments (if applicable)	Actual costs	Monthly	Payable if you buy an existing location from us and request financing. See Item 10.
Late Fee under Promissory Note	1% of delinquent amount (or highest rate allowed by law, whichever is lower, which is currently 10% annually in California)	On demand	Payable if you are late in paying monthly Promissory Note Payments more than 10 days.

Name of Fee	Amount	Due Date	Remarks
Third Party Audits and Charges	Actual costs as incurred	10 days after notice.	Payable if we are charged by third parties for audits, inspections, fines and/or charges imposed or levied against the Food Service Counter, including food safety, facility audits and customer service.
Third-Party Delivery Fee (3)	Varies, 0% to 6.5% of Gross Sales of delivered food	Monthly	Our (or our parent's) agreement with the store or other facility may allow that they keep a percent of Gross Sales to reimburse the store or facility for third-party delivery fees they incur for delivery of your products, such as through Grubhub and DoorDash. If a Third-Party Delivery Fee is assessed for food ordered from you, it will be deducted from the amount returned to you as follows: 1. The full Third-Party Delivery Fee will be deducted from the amount paid to you; or 2. At our discretion, we can agree to share the cost of the Third-Party Delivery Fee with you; or Alternatively, the store or facility may directly charge you for the Third Party Delivery Fee. See Footnote 3.
Local Store Marketing Expense	Varies, 0% to 0.25% of Gross Sales to the store or other facility where you are located	Monthly	Payable if the store or other facility charges us for local marketing initiatives for the Food Service Counter, such as on-site advertisements, coupon offers, social media, mailers and other advertising programs. See Footnote 3.
Repair or Replacement Charges	$1,300 to $1,800	As incurred	This charge is payable in the event we repair or replace your tablet, scale, labeling machine, or software.

Footnotes:

(1) All fees are imposed by and are payable to us, our affiliate or to AFCC. Fees are uniformly imposed. All fees are non-refundable. If you are an entity, each of your owners who are individuals must sign a personal guaranty. The guaranty is on the signature page of the franchise agreement and each addendum. As of March 2026, there were no purchasing or advertising cooperatives. Accordingly, franchisor owned outlets did not have voting power on any fees imposed by such cooperatives.

(2) "Gross Sales" means all sales and revenues whatsoever derived from your business, in any form, except that sales tax, credits or refunds are not part of Gross Sales.

(3) Payable by deduction from our payments to you. The deduction appears on a monthly statement.

(4) You do not receive direct payment from your sales. All sales will be through registers owned or operated by the facility owner. The facility owner forwards payments to us, less any amount to be retained by them under their agreement with us. We retain a compensation fee together with other charges owed to us or AFCC. We return the rest to you. These amounts may vary according to the facility. The amounts are typically 62% to 67% paid to you (less amounts you owe us), 25% to 27% to the facility owner and 8% to 11% to us (plus any amounts you owe us.) If we negotiate a different amount to the facility owner then the percentage to you and us may be different. More often, if different, you will receive a higher percentage, but not always. When the percentage to you is lower, it is usually a location we expect to have a higher volume of sales. As an example, at a prominent university the facility owner retains 30%. We retain 6% and the operator receives 64%, but it is a higher volume location. We will pay you your percentage usually within 30 days after receiving the sales report and payment for the applicable period from the facility owner. Our sole responsibility is to remit to you the agreed commission percentage on amounts actually received from the facility owner. We have no responsibility under any circumstances to pay any commission to you on amounts not received from the facility owner. If we pay your commission in any given month before receiving payment from the facility owner and the facility owner does not pay us as required, you must reimburse us the commissions paid to you. You must also reimburse us any amounts paid to you, if we discover such amounts were paid in error, for example, if the facility owner requests a refund due to overpayment in any given period or if we otherwise overpay you. We can withhold any overpayment from future payments due to you.

(5) Your cost may vary because there are different suppliers of logo items and banners and costs depend on the particular marketing tools selected. Other items could include umbrellas and/or carved wooden signs. Typically, prices are in the range of $250 to $1,000.

(6) We and many jurisdictions require you to have a food safety certificate to operate a business serving food to the public. Every Food Service Counter must have at least one ServSafe® Food Protection Manager and Allergen Certification certified person onsite during all operating hours. You must pay this fee to our approved supplier or us.

(7) "Discrepancy" means any discrepancy between data reported by the facility owner and you. The data reported by the facility owner will control. "Underreporting" means there were sales not included in your sales report to us.

(8) If we choose, we can arrange to get insurance on your behalf, although we have no obligation to do so. If we do, you reimburse us.

(9) If you want to offer something we haven't approved or buy from a supplier we haven't approved, we can charge you or the supplier for expenses we incur in our investigation. The fee will depend on the extent of the investigation needed. You must notify us in writing and provide us samples and other information we need to check out the product or supplier. See Item 8.

ITEM 7 ESTIMATED INITIAL INVESTMENT

YOUR ESTIMATED INITIAL INVESTMENT

ESTIMATED INITIAL INVESTMENT FOR ONE NEW FULL-TIME FOOD SERVICE COUNTER OR PART- TIME FOOD SERVICE COUNTER LOCATED IN A GROCERY STORE OR OTHER LOCATION OWNED BY A THIRD PARTY(1)

Item	Amount	Method of Payment	When Due	To Whom Paid
Initial Fee (2)	$6,250 ($0 for a Part-Time Location)	Cash on signing.	On signing franchise agreement.	AFC
Credit and Background Check Fee (3)	$100 -500	Cash	When turning in application to become a franchisee.	AFC
Tuberculosis, Drug Testing and Criminal Background Checks (4)	$150 - $1,000	We deduct from commissions we pay you.	Shortly after opening.	AFC
Training Fee (5)	$2,300 - $4,600	Cash	Start of training.	AFC
Training Fee for your managers (6)	$0 - $2,300	Cash	Start of training.	AFC
ServSafe® Food Manager Examination & Certification (7)	$75 - $500 per certification	Cash	Before opening	Approved Supplier or AFC
ServSafe® Allergen Awareness Training and Testing (7)	$10 - $30 per certification	Cash	Before opening	Approved Supplier or AFC
Travel and Living Expenses while Training (8)	$2,300 - $7,000	As incurred.	During training.	Airline, hotel, restaurant
Operating Manual/SSOP/ Sushi Recipe Guide/ Wild Blue Recipe Guide/ Steam Table Manual Fee (9)	$300 - $600 ($100 per manual; up to $200 for the Sushi Recipe Guide)	Cash	Start of training (for new franchisees) and when opening another location (for existing franchisees).	AFC
Purchase of already existing AFC operated Food Service Counter from us (10)	$1,000 - $100,000	Cash.	On closing if you buy an existing location from us.	AFC
Opening Food Inventory (11)	$10,400 - $31,200	Cash before opening, or we can deduct from commissions we pay you.	Before opening business or over time by deduction from commissions we pay to you.	Our affiliate
Signage (12)	$0 - $1,000	Cash	Before opening business.	AFC

Item	Amount	Method of Payment	When Due	To Whom Paid
Opening Assistance (13)	$0 - $1,800	Cash or we deduct from commissions we pay you.	Shortly after opening for business or over time by deductions from commissions we pay you.	AFC
Labeling machine (Tablet, scale and label printer) and inventory scanner (14)	$2,629 - $5,380	Cash on purchase, or we can deduct from commissions we pay to you; supplier will require cash.	Before opening for business or over time by deduction from commissions we pay to you.	AFC
Warranty Service for labeling machine (Tablet) (15)	$99 -$199	Cash or we deduct from commissions we pay you.	Before opening for business or over time by deduction from commissions we pay you.	AFC
Data/Service Charge (3 months) (16)	$231	Cash or we deduct from commissions we pay you.	Monthly	AFC
Equipment and Small Wares (17)	$14,700 - $46,000	Cash or we deduct from commissions we pay you.	Before opening for business or over time by deduction from commissions we pay you.	AFC or suppliers
Insurance (per location) (18)	$700 - $5,000	Cash	When incurred.	Insurance company/AFC if we obtain the insurance on your behalf
Additional Uniforms (19)	$10 - $500	Cash	Before opening.	AFC
Licenses & Permits (20)	$300 - $2,000	Cash or by deductions from commissions we pay you.	Before or shortly after opening.	Government Agencies/AFC if we assist in obtaining these for you
Computer and Internet Access (21)	$150 - $800	Cash	Before opening	Third parties
Additional Funds -3 months (22)	$12,000 - $30,400	As incurred	As incurred	employees, suppliers, utilities and our affiliate
Professional Advisor (23)	$1,000 - $2,000	Cash	When incurred before opening.	Your Professional Advisors
Account Broker Fee (24)(first quarterly payment per location)	$0 - $500	Cash	When incurred.	AFC
Total for a new full-time or part time Food Service Counter franchise (25)	$53,704- $149,790 (if you do not purchase an existing AFC operated location from us)			

Item	Amount	Method of Payment	When Due	To Whom Paid
	$54,704 - $249,790 if you purchase an existing AFC operated location from us (see FN 10)			
Total for existing franchisee adding a new full-time or part-time Food Service Counter (26)	$48,769 - $136,160 (if you do not purchase an existing AFC operated location from us) $49,769-$236,160 if you purchase an existing AFC operated location from us (see FN 10)			

Footnotes:

(1) This table provides estimates for one full or part-time Food Service Counter located inside a grocery store or similar location. This table estimates your initial investment from the period before your Food Service Counter opens for business, until about 3 months of operations. We used our experience in operating and working with franchisees to make these estimates. These are only estimates. Your expenses will be higher if you plan to operate more than one full-time or part-time Food Service Counter. We only permit you to operate a part-time location if you already own a full time location. Unless indicated otherwise, all amounts payable are non-refundable. See item 10 for financing we provide.

(2) We charge an initial fee for each full time location operated under the franchise agreement. Currently, we do not charge an initial fee for a part-time location. We determine the fee as follows:

Number of Months Remaining on Your Franchise Agreement (on effective date of the addendum)	Initial Fee Per Location
48-60	$6,250
36-47	$5,000
24-35	$3,750
12-23	$2,500
Less than 12	$1,250

You pay the initial franchise fee in a lump sum on signing each full time location addendum. The low estimate assumes you are an existing franchisee opening an additional part time location where no franchise fee is charged. The high estimate assumes you are a new or existing franchisee purchasing a full time location with 48 or more months left under your Franchise Agreement.

(3) You pay us the credit and background check fee when you provide us your completed application to become a franchisee. We do not charge this fee if you are an existing franchisee opening an additional location.

(4) Whenever we or the facility owner requests, you and your specified personnel must undergo drug, tuberculosis and other chemical and disease testing and/or criminal background investigation. The low estimate assumes a criminal background check for one person only. The high estimate assumes we or the facility owner require drug, tuberculosis and other chemical and disease testing as well as a criminal background investigation on two persons (you and one helper). If you fail any required drug, tuberculosis or other chemical and disease testing (which we or the facility owner requires) or any criminal background investigation we may cancel the franchise agreement and keep the fees paid to us.

(5) You pay us when training starts. If the franchisee is an entity, each of the franchisee's principal owners must attend our training. Principal owner means any individual who owns directly or indirectly 30% or more of the entity. If you (or your principal owner(s)) do not complete training to our satisfaction we may cancel the franchise agreement and keep the fees paid to us. There is no training fee for an existing previously trained franchisee adding an additional franchised location. The training fee includes the purchase price of 2 sets of uniforms. The low estimate assumes only one person receives sushi training. The high estimate assumes two persons receive steam table and sushi bar training.

(6) You pay this fee if you elect and request to bring a manager to our initial training program. The low estimate assumes you do not bring a manager to the initial training program. The high estimate assumes you bring a manager and the manager receives both steam table and sushi training.

(7) We and many jurisdictions require you to have a food safety certificate to operate a business serving food to the public. Every Food Service Counter must have at least one ServSafe® Food Protection Manager certified person onsite during all operating hours. You must also enroll in the ServSafe® Allergen Awareness Training offered online by ServSafe®. You must pass both training exams before orientation training and the certificates must be issued less than one year prior to the first day of orientation training. You are required to pay this fee to our approved supplier or us. We require proof that you completed the training and passed the exam prior to the first day of orientation training. See Item 11.

(8) Expenses to travel to location of training, which may be, in our discretion in California, and for hotel and meals during our training program (including food certification training). There is no training fee for an existing franchisee adding an additional location to their existing agreement. This estimate assumes you spend $600 to $1,250 for round trip airfare per person, 10 to 25 nights in a hotel at $150 - $200 per person per night, and $200 - $1,000 per person for meals. The low estimate assumes only you are trained in our 10 day sushi training program. The high estimate assumes you and a manager are trained in the 10 day sushi program and 13 day steam table training programs.

(9) We charge a manual lease fee for each operating manual we provide to you. Currently, these are our Confidential Operation's Manual, Standard Sanitation Operating Procedure Sushi Recipe Guide, Wild Blue Recipe Guide and Methods Manual and Steam Table Manual (if applicable to your franchise). You will receive one set of manuals for each full-time and part-time Food Service Counter you operate. The manual lease fee you pay is refunded to you when you return the manuals to us on termination or expiration of your agreement.

(10) If you purchase an existing Food Service Counter from us or our parent, we will charge you our estimate of the fair market value of the Food Service Counter, taking into account the revenue, assets, equipment and value of the established market of the Food Service Counter sold to you. You will either sign our form of Asset Purchase Agreement attached as Exhibit I, if the sale includes the assets and equipment of the Food Service Counter, or our form of Food Service Counter Transfer Agreement, attached as Exhibit J, if the sale does not include the sale of assets and equipment of the Food Service Counter.

(11) Estimated cost for opening food inventory. We try to have the opening food inventory at your location when you arrive to start the business. The low estimate assumes you only operate a steam table Food Service Counter. The high estimate assumes your Food Service Counter offers both sushi and steam table foods.

(12) For a Food Service Counter in a grocery store, the store will usually purchase and own the display case(s), signage, refrigerator, ice machine, preparation tables, storage racks, sinks and similar equipment. The high estimate of $1,000 assumes you buy optional decorative umbrella(s), sign(s) or banner(s) with words or slogans we approve.

(13) After opening, we will stay at your location up to three days at no charge. If you ask, or we determine, that our employee needs to stay longer, we charge you $450 per day. The low estimate assumes that our employee does not stay beyond three days. The high estimate assumes our employee stays with you four additional days (7 days total).

(14) Estimated cost for Tablet, scale and printer to print price and ingredient labels for the products you sell and an inventory scanner to track your daily inventory of products made at your food service center. The cost of the label machine will vary, depending on the type of tablet and printer you decide to purchase in accordance with the requirements in the manual. The low estimate assumes you already have the printer, scale and inventory scanner needed at your location. The high estimate assumes you are required to purchase a Tablet, printer, scale and inventory scanner.

(15) Estimated cost for warranty service for the first 24 months or for the first 36 months, respectively for the labeling machine.

(16) Estimated 3 month cost for the data and web access fee for the Tablet you purchase, currently $77 per month.

(17) Estimated cost for smallwares and additional equipment consisting of items like a rice cooker, rice sheeter, storage containers, utensils, heated display case, delivery containers, refrigerators, steam table equipment (if required for your franchise), cooking equipment (if required for your franchise), Perfect Fryer, TurboChef Oven and related items.

(18) Estimated one year premium for required insurance. Insurance premiums may vary based on sales. If we pay on your behalf, you reimburse us.

(19) Estimated cost for four additional uniforms, including a hat, a coat and an apron beyond those you receive at the initial training. Low estimate assumes you choose not to purchase additional uniforms. The high estimate assumes you purchase these additional uniforms.

(20) Estimated costs for retail food license and business license which typically must be obtained from the City, County and/or State. At our election, we have the right, but no obligation, to obtain any required licenses and permits in your name. You grant us a power of attorney to apply for any required licenses, permits and any renewals of these for your food service counter(s). You reimburse us for any costs and fees incurred by us in applying for these licenses and/or permits on your behalf.

(21) Estimated costs for computer and Internet access. The low estimate assumes you already own a computer or laptop capable of Internet access and must only pay for Internet service through your preferred provider. The high estimate assumes you purchase a computer with Internet connectivity capabilities and Internet service. This estimate is for the first 3 months, but your Internet service payments will be ongoing to your service provider.

(22) We recommend that you have some additional funds for opening cash and expenses to cover entity formation costs, three months of operations, employee salaries (including yourself), supplies, administrative costs and funds of on-going inventory purchases for the first 3 months of operations at $3,000 to $7,500 per month.

(23) Estimated charges for you to consult with independent professional advisors like a lawyer and CPA.

(24) The low estimate assumes you are in a facility or store where no account broker fee need be paid. The high estimate assumes you are in a location where an account broker fee must be paid. This fee is only paid if we pay a fee for the right to locate the Food Service Counter in the facility or store. You reimburse us for the amounts paid, not to exceed $500 per quarter for each Food Service Counter subject to this fee.

(25) A new franchisee will not achieve the low estimate of zero in any category where zero is indicated, except possibly training fee for managers (if no managers are trained) additional uniforms (if no additional uniforms are purchased) and opening assistance (see footnotes 5, 18 and 13). The estimated range for a new franchisee is based on the low estimates from these footnotes, and a high that is the sum of the high estimates in each category.

(26) The initial investment for an additional location is similar to a new franchise, except an existing franchisee adding an additional location may possibly achieve a low estimate of zero in one or more categories. The estimated range for an existing franchisee adding an additional location assumes that the low estimate of zero will be achieved for: a) the credit and background check fee; b) tuberculosis, drug testing and criminal background checks; c) ServSafe® Food Manager Examination & Certification d) ServSafe® Allergen Awareness Training and Testing; and, since there is no further initial training for you or your managers, e) training fees for your or your managers; and f) travel and living expenses during training for you or your personnel. Thus, the total ranges are not simply the sum of the low or high estimates. Since some of the testing and certifications expire every two years, you may be required to complete c) and d). We may also require you to complete b).

ESTIMATED INITIAL INVESTMENT FOR A SELF-SERVICE FOOD SERVICE COUNTER LOCATED IN A GROCERY STORE OR OTHER LOCATION OWNED BY A THIRD PARTY(1)

Item	Amount	Method of Payment	When Due	To Whom Paid
Opening Food Inventory (2)	$1,625 - $6,500	Cash before opening, or we can deduct from commissions we pay you.	Before opening or over time by deduction from commissions we pay to you.	Our affiliate
Signage (3)	$0 - $500	Cash	Before opening	AFC
Coolers and Ice Packs (4)	$0 - $900	Cash	Before opening	Suppliers
Insurance (5)	$500 -$ 2,000	Cash	When incurred	Insurance company/AFC if we obtain the insurance on your behalf
Licenses & Permits (6)	$300 - $1,500	Cash or by deductions from commissions we pay you	Before or shortly after opening.	Government Agencies/ AFC if we assist in obtaining these for you
Additional Funds -3 months (7)	$1,600 - $9,000	As incurred	As incurred	employees, suppliers, utilities, AFC
Account Broker Fee (8)(first quarterly payment per location)	$0 - $500	Cash	When incurred.	AFC
Total for a self-service Food Service Counter	**$4,025- $20,900**			

Footnotes:

(1) This table provides estimates for a self-service Food Service Counter located inside a grocery store or similar location. We let you open a self-service Food Service Counter only if you already have an existing full-time or part-time Food Service Counter franchise. We do not charge an initial fee for you to enter into the Self-Service Location Addendum with us. This table estimates your initial investment from the period before your self-service Food Service Counter opens for business, until about 3 months of operations. We used our experience in operating and working with franchisees to make these estimates. These are only estimates. Unless indicated otherwise, all amounts payable are non-refundable. See item 10 for financing we provide.

(2) Estimated additional cost for opening food inventory. Food inventory is delivered to your full-time Food Service Counter for preparation. It is your responsibility to prepare the food and deliver it at least once daily to your self-service location.

(3) For a Food Service Counter in a grocery store, the store will usually purchase and own the display case(s), signage, storage racks and similar equipment. The high estimate of $500 assumes you buy an optional decorative umbrella, sign or banner with words or slogans we approve.

(4) Estimated cost for you to purchase coolers and ice packs to allow you to transport the food products to your self-service location. The low estimate assumes you already own this equipment.

(5) Estimated one year premium for required insurance at your self-service location. Premium amounts may vary based on sales volume.

(6) Estimated costs for retail food license and business license which typically must be obtained from the City, County and/or State. At our election, we have the right, but no obligation, to obtain any required licenses and permits in your name. You grant us a power of attorney to apply for any required licenses, permits and any renewals of these for your Food Service Counter(s). You reimburse us for any costs and fees incurred by us in applying for these licenses and/or permits on your behalf.

(7) We recommend that you have some additional funds for opening cash and expenses to cover entity formation costs, three months of operation, employee salaries (including yourself), supplies, administrative costs and funds of on-going inventory purchases for the first 3 months of operations.

(8) The low estimate assumes you are in a facility or store where no account broker fee need be paid. The high estimate assumes you are in a location where an account broker fee must be paid.

ITEM 8 RESTRICTIONS ON SOURCES OF PRODUCTS AND SERVICES

Your Food Service Counter will be at a location you and we choose. It will be a grocery store or other location whose owner has an agreement with us or our parent for us to place a Food Service Counter there.

We develop some proprietary food products, sauces and spices. To protect our trade secrets and maintain quality control, we can require you to buy these proprietary items only from us or from suppliers we designate. Currently, we, our affiliates and our other approved suppliers are the only approved sources for seafood products, rice, vinegar, pre-prepared frozen salads, prepackaged condiments, prepackaged food items, other food products not including produce, utensils with our logo, and serving trays. Equipment like food preparation utensils (knives, rice scoopers) and plastic storage containers, can be purchased elsewhere provided they have been approved by the National Sanitation Foundation and bear the NSF logo. You must also comply with any source restrictions imposed by the facility owner to maintain quality control or an identifiable source for products in the event of product recalls.

We do not require you to buy or use electronic cash registers. All food purchases are normally handled through supermarket cash registers or the registers of the facility where your franchise is located. You are required to purchase a computer system with Internet connectivity to permit you to submit purchase orders online and to obtain information on new products, product specifications or other information.

We typically provide the initial inventory and equipment to the Food Service Counter before you arrive to start operating. As a result, you will obtain these items from us. This helps us get your Food Service Counter ready and lets you start operating sooner. You must keep all equipment in good repair.

We have a list of approved suppliers for food products and other items you need to operate the Food Service Counter. The list identifies manufacturers, brands, suppliers, transportation companies, and items and services we approve. We can revise the list from time to time. Other than our parent AFCC, our affiliate AFCDC and us, we do not have any suppliers in which any of our officers own an interest.

We have the sole right to develop new items for sale at your Food Service Counter. You must not develop, offer or sell sushi or other food items to the public without our prior written approval or sell any non-approved item from your Food Service Counter.

If you want to offer something we haven't approved, or buy from a supplier we haven't approved, you must tell us in writing and provide us samples and other information we need to check out the product or supplier. We expect to complete our review of a proposed new supplier within 60 days, however this could take longer depending on our and the supplier's availability, and the extent of inquiry needed. Our approval may be conditioned on things like whether the supplier meets our standards, has a good reputation, has satisfactory financial condition, can provide service at a level we require, and is willing to agree to restrictions to protect our intellectual property rights. We can charge you or the supplier to investigate the supplier. Later, we can revoke any approval we've given. We permit franchisees to contract with suppliers who have been approved by us and who meet our criteria. We can issue written specifications and standards to franchisees and approved suppliers. We have the right to modify our specifications and standards on written notice.

You must purchase the insurance coverage we specify from carriers satisfactory to us, and containing terms we require. As of the effective date of this Disclosure Document, we require the following insurance:

(a) Commercial General Liability coverage covering the premises and your operations for bodily injury and property damage liability including contractual liability, personal injury and product liability coverage in amounts not less than $1,000,000 per occurrence and $2,000,000 aggregate;

(b) Worker's Compensation Insurance in statutory amounts as required in the state(s) where your operations are conducted, including a Voluntary Worker's Compensation endorsement extending coverage to all employees exempted from coverage due to numerical employment requirements of the state;

(c) Employer's Liability Insurance with limits of $1,000,000 per occurrence;

(d) Unemployment Insurance covering your employees;

(e) Property Insurance in an amount adequate to replace contents in the event of an insured loss;

(f) Business Income Insurance with limits adequate to insure profits and continuing business expenses for one year;

(g) State disability insurance for your employees (as required by law); and

(h) Automobile liability insurance including coverage for autos owned, leased, hired or borrowed by you or your owners, with limits of at least five hundred thousand dollars ($500,000) per occurrence of bodily injury and property damage combined, and any other or increased amounts of insurance that we may require from time to time for each vehicle used by you (whether principally or occasionally) in connection with the franchised business (for example, to drive to the franchised location(s), to deliver products to self service locations, or otherwise). See Franchise Agreement Section 12.1.

You must use only goods and services that comply with our standards. We don't have any other required specifications, designated suppliers or approved supplies. Except as disclosed in this Item, we do not currently have any arrangements to derive revenue from your purchases or leases from third parties. We could make such arrangements in the future.

Our affiliate, AFCDC, derives revenue from your purchases from them. The revenue equals the amount AFCDC charges you for the items. Your purchases from us and/or our approved suppliers will be 85% or more of the purchases you will make to start the business; and nearly 95% or more of the purchases you will make on an ongoing basis to operate the business. The main item we expect that you will buy from others is produce. In the year ended March 31, 2026, AFCDC generated approximately $290 million in gross receipts of which $234 million in the US was from required purchases by franchisees, which is 80.7% of the total AFCDC revenues. As of April 1, 2025, we no longer make direct sales to franchisees. Accordingly, in the fiscal year ending March 2026, we did not derive revenue from required purchases by franchisees.

There aren't any purchase or distribution cooperatives and we do not negotiate terms from any suppliers to supply direct to franchisees. There are no material benefits to you based on buying from particular suppliers.

ITEM 9 FRANCHISEE'S OBLIGATIONS

This table lists your principal obligations under the franchise and other agreements. It will help you find more detailed information about your obligations in these agreements and in other items of this Disclosure Document.

Obligation	Sections In Agreement	Items In Disclosure Document
a. Site selection and acquisition/lease	Fran. Agmt. Secs. 1, 3.1-3.4 Full-Time/Part-Time/Self-Service Location Franchise Addendum Sec. A. Asset Purchase Agmt. Food Service Counter Transfer Agmt.	7, 8, 11, 17
b. Pre-opening purchases/ leases	Fran. Agmt. Secs. 11.5, 11.11, 11.12, 11.15, 11.18, 11.19, 11.20, 12.1 Full-Time Location Franchise Addendum Sec. D. Part Time/Self Service Location: Sec. C	5, 8
c. Site development and other pre-opening requirements	Fran. Agmt. Secs. 3.1-3.4	5, 8, 11, 12
d. Initial and ongoing training	Fran. Agmt Secs. 11.26, 11.27, 11.28	11
e. Opening	Fran. Agmt. Secs. 2 Full-Time Location Franchise Addendum Sec. C. Part Time/Self Service Location Sec. B.	11

Obligation	Sections In Agreement	Items In Disclosure Document
f. Fees	Fran. Agmt. Secs. 4.5, 9, 11.26-11.30, 13.2, 14.9; Full-Time Location Franchise Addendum Sec. B, E. Part Time/Self-Service Location Addendum: Sec. D	5, 6
g. Compliance with standards and policies/Operating Manual	Fran. Agmt. Secs. 1, 5, 6.1-6.7, 7.1-7.2, 11.1 - 11.28, 11.30 Full-Time Location Franchise Addendum Sec. F. Part Time/Self Service Location Addendum Sec. E.	11
h. Trademarks and proprietary information	Fran. Agmt. Secs. 4.1-4.5, 6.1-6.7, 16.9	13, 14
i. Restrictions on products/services offered	Fran. Agmt. Secs. 7.2, 11.1-11.25	16
j. Warranty and customer service requirements	Fran. Agmt. Secs. 9.2, 11.2, 11.6, 11.7, 11.22	11
k. Territorial development and sales quotas	Not Applicable	12
l. Ongoing product/service purchases	Fran. Agmt. Secs. 11.4-11.6, 11.8-11.13, 11.14, 11.15	8, 10
m. Maintenance, appearance, and remodeling requirements	Fran. Agmt. Secs. 7.1-7.2, 11.1-11.3	8, 17
n. Insurance	Fran. Agmt. Secs. 12.1-12.5	7, 8
o. Advertising	Fran. Agmt. Sec. 8 and 9	11, 12
p. Indemnification	Fran. Agmt. Sec. 12.6 Asset Sale Agmt. Sec. 8.2 Food Service Counter Transfer Agmt. Sec. 5	6
q. Owner's participation/ management/staffing	Fran. Agmt. Sec. 11.17, 11.28 Full-Time Location Franchise Addendum: Sec. F. Part Time/Self-Service Location Franchise Addendum Sec. E	15
r. Records/reports	Fran. Agmt. Secs. 10.1-10.4, 11.1	6
s. Inspections/audits	Fran. Agmt. Secs. 4.5, 10.4	6
t. Transfer	Fran. Agmt. Secs. 14	6,17
u. Renewal	Fran. Agmt. Sec. 13	17
v. Post-termination obligations	Fran. Agmt. Secs. 15.6-15.7 Full-Time Location Franchise Addendum Sec. G.3-G.6 Part Time/Self Service Location Addendum: Sec. F.3-F.6	17
w. Non-competition covenants	Fran. Agmt. Secs. 6.3-6.7	17

Obligation	Sections In Agreement	Items In Disclosure Document
x. Dispute resolution	Fran. Agmt. Sec. 16.8 General Release Sec. 9 Asset Sale and Purchase Agmt. Sec. 10.3 Food Service Counter Transfer Agmt. Sec. 10.	17
y. Risk Management	Fran. Agmt. Secs. 12.1-12.6	6
z. Nature of Business	Fran. Agmt. Sec. 12.7	1
aa. Restriction on Communication	Fran. Agmt. Sec. 16.5	15
bb. Personal Guaranty	Signature Page of Franchise Agreement, Full-Time/Part-Time/Self-Service Location Franchise Addendum	5, 6
cc. Tuberculosis, Drug Testing and Criminal Background Checks	Franchise Agmt. Sec. 11.30	5, 6, 7
dd. Cross Default	Franchise Agmt. Sec. 15.3 Full- Time Location Franchise Addendum Sec. G.2 Part Time/Self-Service Location Addendum: Sec. F.2	17

ITEM 10 FINANCING

We can finance certain expenses you incur in operating your Food Service Counter, at our discretion, in circumstances when the commission payable to you is less than the balance owed to us. You can pay us over a period of months by deductions from commissions we pay you. We do not offer other direct or indirect financing. We do not finance any debt to a third party. We do not guarantee your note, lease or obligation.

Summary of Financing Offered

Item Financed (Source)	Amount Financed	Down Payment	Term (MOS) (1)	APR%	Monthly Payment (1)	Prepay Penalty	Security Required (2)	Liability on Default	Loss of Legal Right on Default
Initial Franchise Fee (4)	Up to $2,500	$2,500	3(1)	No interest	Varies(1)	None	None	Individual liability	Not applicable
Initial Inventory Purchase	$10,400-$31,200	None required	3-6(1)	No interest	Varies(1)	None	None	Individual liability	Not applicable
Ongoing Inventory	$6,500 - $23,400	None required	3-6(1)	No interest	Varies(1)	None	None	Individual liability	Not applicable
Opening Assistance	Up to $1,800	None required	3-6(1)	No interest	Varies(1)	None	None	Individual liability	Not applicable
Labeling Machine and Warranty	Up to $1,800	None required	3-6(1)	No interest	Varies(1)	None	None	Individual liability	Not applicable
Equipment and Small Wares	$14,700-$46,000	None required	3-6(1)	No interest	Varies(1)	None	None	Individual liability	Not applicable

Item Financed (Source)	Amount Financed	Down Payment	Term (MOS) (1)	APR%	Monthly Payment (1)	Prepay Penalty	Security Required (2)	Liability on Default	Loss of Legal Right on Default
Purchase Price Financing of Existing Location(3)	$0 - $50,000	Varies, but usually equals first installment due	0-12 months	No interest	Varies(3)	None	None(3)	Individual liability	Not applicable

Footnotes:

(1) We may lump all expenses together. Our accounting manager makes a determination regarding the term of the financing and monthly payment, which is then deducted from commissions we pay you. The range financed will depend on which items are financed and ratio between store sales and amount owed. A shorter term would increase the monthly deduction.

(2) We self-finance the above purchases. We do not require any security interest to obtain financing. Except when purchasing an existing location, you do not sign a promissory note, so there is no waiver of defenses. We do not have any practice or intent to sell, assign or discount the financing arrangements to any third party. We do not arrange financing from other sources and we do not guarantee your obligations to third parties.

(3) If you purchase an existing business from us and ask us to finance part of your purchase price, you will sign a promissory note. If you fail to make payments, we can deduct payments from commissions due to you.

The Promissory Note provides a late payment penalty of the lower of 1% per month or highest rate allowed by law of the amount overdue and acceleration of the entire amount due if you are more than 10 days late making a payment. If you don't comply with the Promissory Note or any of the other agreements with us we can accelerate the entire amount remaining due without notice.

You waive all rights to presentment, protest and demand, diligence in collection and notice of protest, presentment, demand, dishonor and nonpayment of the Promissory Note and any release or discharge arising from any extension of time, discharge of any party liable for payment of the Promissory Note, or other cause of release or discharge other than actual payment in full of the Promissory Note.

We don't have any intent to sell, assign or discount to a third party all or part of the Promissory Note; however, we reserve the right to do so.

(4) If you purchase a Food Service Counter and a Freshly Go Counter simultaneously, we will finance part of your initial franchise fee up to $2,500 over a 3 month period.

ITEM 11 FRANCHISOR'S ASSISTANCE, ADVERTISING, COMPUTER SYSTEMS AND TRAINING

Except as listed below, AFC is not required to provide you any assistance.

Pre-Opening Services. Before you open your Food Service Counter for business, we will provide you the following services:

1. We will provide you (or your principal owners) training described in the tables, below, unless you already received our training. The training provided will depend on the type of Food Service Counter you will operate--sushi, steam table or a combination of both and whether you already have food safety certification. We may exempt you from some or all of our training sessions if we determine, at our sole discretion, that you are already experienced in these subjects. You (or your principal owners) must complete this training to our satisfaction before starting operations. If you (or your principal owners) fail to complete training to our satisfaction, we may cancel the franchise agreement and keep all amounts paid to us. We may also exempt you from some or all training (at our sole discretion) if you or your affiliate currently owns or operates a Food Service Counter or the Franchise Agreement is executed as a renewal Franchise Agreement (Fran. Agmt Sec. 11.26).

TRAINING PROGRAM
Sushi Bar Training Table (if applicable to your Franchise) [1,2,3]

Subject	Hours of Classroom Training	Hours of on the Job Training	Location
Introduction, Legal Compliance and Label Machine Instruction	4 Hours	Not Applicable	Our corporate headquarters, online or other location we choose.
Sanitation and GMP	8 Hours	Not Applicable	Our corporate headquarters, online or other location we choose.
Sushi and Other Food Preparation and Evaluation	Not Applicable	48 Hours	Our corporate headquarters, online and/or at a company owned and operated Food Service Counter that we select, or other location we choose.
Sushi Related Products, Product Demonstration and Sampling Programs	4 Hours	4 Hours	Our corporate headquarters, online and/or at a company owned and operated Food Service Counter that we select, or other location we choose.
Franchise Management [4]	16 Hours	Not Applicable	Our corporate headquarters, online or other location we choose.
TOTALS	**32 Hours**	**52 Hours**	

(1) The sushi bar training course takes 10 days. This training is provided where the primary food offering is suchi and onsite cooking is not required.

(2) We will offer the training program weekly or as needed.

(3) We use the following Instructional Materials: Standard Operating Manual, Standard Sanitation Operating Procedure and Methods Manual and recipe guides applicable to your franchise.

(4) Franchise Management includes basic accounting, operations, business insurance, inventory control, employee management, marketing, license and permitting requirements.

TRAINING PROGRAM
Steam Table Training Table (if applicable to your Franchise) [1,2,3]

Subject	Hours of Classroom Training	Hours of on the Job Training	Location
Kitchen Equipment, Sanitation and GMP	Not Applicable	6 Hours	Our corporate headquarters, online and/or at a company owned and operated Food Service Counter that we select, or other location we choose
Kitchen Set-Up and Ingredient and Material Preparation	Not Applicable	14 Hours	Our corporate headquarters, online and/or at a company owned and operated Food Service Counter that we select, or other location we choose
Steam Table Menu, Product Cooking and Evaluation	Not Applicable	44 Hours	Our corporate headquarters, online and/or at a company owned and operated Food Service Counter that we select, or other location we choose.
Demonstration and Sampling Programs	Not Applicable	4 Hours	Our corporate headquarters, online and/or at a company owned and operated Food Service Counter that we select, or other location we choose.
Franchise Management[4]	4 Hours	Not Applicable	Our corporate headquarters, online or other location we choose.
TOTALS	**4 Hours**	**68 Hours**	

(1) The steam table training course takes 9 days. This training is provided where onsite cooking is offered.

(2) We will offer the training program as needed.

(3) We use the following Instructional Materials: Standard Operating Manual, Standard Sanitation Operating Procedure and Methods Manual, Steam Table Operating Manual and recipe guides applicable to your franchise.

(4) Franchise Management includes basic accounting, operations, business insurance, inventory control, employee management, marketing, license and permitting requirements.

TRAINING PROGRAM
Food Protection Manager Certification Training

Subject	Hours of Classroom Training	Hours of on the Job Training	Location
ServSafe® Food Protection Manager Certification [1,2,3,4]	12 Hours	Not Applicable	Our corporate headquarters, online or other location we choose.
Allergen Awareness Training[5]	1 - 3 Hours	Not Applicable	Online
TOTAL	13 -15 Hours		

(1) You must enroll in the ServSafe® Food Protection Manager Certification program either offered by our approved supplier or us and pass the certification exam before the first day of orientation training. The certificates must be issued less than one year prior to the first day of orientation training. ServSafe® Food Protection Manager Certification training takes 2 days.

(2) If you participate in the training with us, we will offer the training program weekly or as needed.

(3) The instructions material used is ServSafe® Essentials.

(4) Every Food Service Counter must have one ServSafe® Food Protection Manager Certified person onsite during all operating hours.

(5) You must enroll in the ServSafe® Allergen Awareness Training offered online by ServSafe® and pass the training exam before the first day of orientation training. The certificates must be issued less than one year prior to the first day of orientation training. ServSafe® Allergen Awareness Training takes 1-3 hours. We require proof that you completed the training and passed the exam prior to the first day of orientation training.

We charge $1,000 for the sushi training and $1,300 for the steam table training, up to $500 per certification for the ServSafe® Manager Examination and Certification and up to $30 per certification for the ServSafe® Allergen Awareness Training. If we exempt you from all training, we will waive the training fee. You pay your own travel and living expenses during training. Classroom training is at our corporate headquarters in Torrance, California, online or other location we choose. We reserve the right to waive the training requirement in our absolute discretion where we are satisfied that you have sufficient skill, knowledge and experience with both the operational requirements and our prescribed and preferred procedures. On the job training is partly at a kitchen at our corporate headquarters and partly at a company owned and operated Food Service Counter that we select.

Our trainers are various individuals who work in various departments such as accounting, operations, marketing and compliance. Each individual provides instruction on the area of his or her experience. At the issuance date of this Disclosure Document these included: Gerardo Siordia Posada, who has 7 years' experience with us, is our Director of Corporate Training; Mike Hong, who has 10 years' experience with us, is our business development and product promotion and customer service instructor; San Yu, who has 7 years' experience with us, is our business development and product promotion and customer service instructor; Peter Han who has 30 years' experience with us, is our food preparation instructor; Aung Thu who has 10 years' experience with us, is our food preparation instructor; Ye Tun, who has 10 years' experience with us, is our franchise labeling equipment instructor; Tai-li Wang who has 13 years' experience with us, is our franchise documentation instructor; and Ben Wu, who has 9 years' experience with us, is our Hot Food Senior Manager.

To help compare the store's reported sales and reduce or avoid discrepancies, during training we instruct you on keeping a log of your sales; and comparing your log to the sales reports we send you, which are based on information reported to us by the facility owner. If there is a discrepancy, you must tell us within 30 days. We can then contact the facility owner to alert them and attempt to reconcile the discrepancy. (Fran. Agmt § 10.3).

2. We will identify a grocery store or other venue where your Food Service Counter will be located and we will have worked with them on the build-out of the Food Service Counter. (Fran. Agmt. Sec. 3.1). Locations are established based on our parent's or our written agreement with a grocery store chain or venue owner, to place Food Service Counters at their locations. We are not required to show you the agreement. Our agreement with the facility owner may be month-to-month and can be terminated by the facility owner on short notice. We consult with you on which of the available locations to assign to you before you sign the franchise agreement. If you purchase an existing location from us or our parent, we will charge you our estimate of the fair market value of the Food Service Counter, taking into account the revenue, assets, equipment and value of the established market of the Food Service Counter sold to you.

You must select a location before signing the franchise agreement. If you and we cannot agree on a location, then we will not enter into the franchise agreement. You are responsible to obtain all required licenses and permits to operate your location and to hire and train employees. You must provide copies of your licenses and permits to us. If the facility owner, due to labor contracts or otherwise, requires your Food Service Counter(s) employees to be employed directly by the facility owner, and we are asked to reimburse the facility owner for these employment costs, we will then deduct such payments from the amounts due to you under your Franchise Agreement. We can assist you obtain health permits on request. We will train those employees you select at our then standard rates.

3. We will loan you a copy of our Confidential Operating Manual, SSOP Manual and Steam Table Operating Manual (if applicable to your franchise). (Fran. Agmt. Sec. 5.1.). The table of contents of our operating manuals are Exhibit L to this Disclosure Document. As of March 2025 our Standard Operating Manual contained a total of 163 pages, our Standard Sanitation Operating Procedure and Methods Manual had a total of 29 pages, our Steam Table Manual had a total of 21 pages, our Sushi Recipe Guide had 125 pages, our Steam Table Recipe Guide had 62 pages and our Wild Blue Recipe Guide had 162 pages.

4. You must purchase from us and/or our approved suppliers any required equipment, signs, fixtures, opening inventory and supplies not provided by the owner of the facility where you will operate. We will provide written specifications to you about these requirements on written request. You are responsible to install these items, unless the installation will be done by the facility owner. We will deliver initial inventory and equipment to the Food Service Counter. You pay us for these. (Part Time and Self-Service Fran. Addendums Sec. C; Full Time Fran. Addendum Sec. D). You must keep all equipment, signs and fixtures in good repair.

If we agree to grant you a franchise, then typically you will start operating your Food Service Counter within 3-10 days after you complete training. The main factors to this timing are whether the location is already built out by the facility owner, equipped and ready to operate, time for you to return to where the franchise will be located, and your desire and readiness to start. If there is a delay by the facility owner in building the location, or delay by you and us in choosing a location, it could be 30-60 days or longer before you start operating the Food Service Counter.

Post-Opening Services. After your Food Service Counter opens, we will provide you the following services:

1. For your first location only, we will send our regional manager or other employee to assist you at your location for up to three days. If you ask, or we decide that additional on-site training is needed, we'll charge you $450 per additional day. Our decision will be based on our evaluation of your need for additional assistance. We decide in consultation with you. (Fran. Agmt. Sec. 11.27.)

We will provide ongoing research and development seeking to identify new products that you may sell at your Food Service Counter. (Fran. Agmt. Sec. 11.6.) We will tell you about identified new products that you must offer or sell.

2. We will identify suggested and approved suppliers for products you will use in your Food Service Counter(s). For some items we may be the only approved supplier. We plan to identify any approved supplier in writing. (Fran. Agmt. Sec. 11.10)

3. We (or independent third party inspectors) will periodically inspect your Food Service Counter(s) and tell you of operations we think you need to address or improve. (Fran. Agmt. Secs. 4.5, 11.2)

4. We may periodically provide additional training on new products or operation. We can require you and your manager to attend. We can charge you our current training fees for each person for whom we provide such additional training. You are responsible for all travel and living expenses incurred to attend any training programs. (Fran. Agmt. Sec. 11.28.)

5. We may recommend resale prices or pricing schedules to you and may provide pricing labels conforming to these recommendations. You have the right to determine prices that you charge for products sold from your Food Service Counter(s). If you want to charge a price or prices that differ from a price or price schedule recommended by us, then you must pay or reimburse any additional reasonable costs that we incur to prepare price labels containing the pricing determined by you. When allowed by law, we can specify maximum and minimum prices for products sold at your Food Service Counter. (Fran. Agmt. Sec. 11.25.)

If you must stop operating at a location because the owner of the location no longer wants a Food Service Counter there, or objects to you as the operator there, without your fault, we will try to find another location in the area for you to relocate to. There could be delay in getting another location, relocation may not be possible before expiration of the term of your agreement, or at all and your new location may not be comparable to the old. Additionally, any relocation, will involve a substantial interruption in operating your Food Service Counter until a new location is identified and prepared. You do not have to pay another franchise fee but you could lose expenses incurred from the original location. Conditions and results of the new location may differ from the prior location. If we cannot get a new location there is still no refund of any fees. (Fran. Agmt. Sec. 3.2).

If you ask, we will give you a list of our franchises in an area to help you comply with the restriction on competing that continues in effect after you are no longer our franchisee. (Fran. Agmt. Sec. 6.4(E)). On request, we will also assist you with any operational problems you encounter.

Advertising

We encourage you to advertise your Food Service Counter. You must submit proposed advertising to us and use the materials only after you get our consent. You can't use any materials without first getting our written consent. We can restrict where you can advertise and how you advertise. You may not advertise on the Internet or use other electronic media without obtaining our prior written consent. Your advertising must include trademark, copyright and independent ownership notices that we request. (Fran. Agmt. Sec. 8.1 and 8.2). There is no franchisor sponsored or operated franchise advertising program or fund at this time. We have no obligation to spend any amount on advertising in the area or territory where your Food Service Counter is located.

We can designate a geographic area as an advertising cooperative that you must participate in. You'll participate and contribute to the cooperative according to its procedures. We can set the amount you and other franchisees contribute to any advertising fund operated by the cooperative. There is no requirement for franchisor owned outlets to contribute to the fund, although we anticipate that they will do so according to guidelines we establish. The cooperative will operate according to governing documents that we prepare or consent to. (Fran. Agmt. Sec. 8.4). If and when formed, these will be available to you for review. We can decide who administers the cooperative. There are no current requirements for cooperatives to prepare financial statements. We have the power to form, change, dissolve or merge cooperatives, at our discretion. (Fran. Agmt Sec. 8.4).

There are no current advertising councils composed of franchisees that advise us on advertising policies.

We can conduct regional or national advertising campaigns, geotargeted marketing campaigns, or national news and weather campaigns (the "Advertising Campaigns"). We can bill you your pro-rata share of such advertising. We may absorb some of the cost for such advertising, but are not obligated to do so. We undertake no obligation, in administering such Advertising Campaigns, to make expenditures for your Food Service Counter(s) that are equivalent or proportionate to your contribution, or to ensure that any particular franchisee benefits directly or pro rata from marketing or promotion conducted with the Advertising Campaigns. Food Service Counters operated by us or our affiliates may, but are not required to, contribute to

the Advertising Campaigns. If they do, they may not be required to contribute in the same percentage as you and may stop contributing at any time without notice to you. We will prepare an annual unaudited accounting of the expenditures of the Advertising Campaigns which will be provided to you upon your written request. (Fran. Agmt. Sec. 8.6 and 9.18).

Computer Equipment and Registers

We do not require you to buy or use electronic cash registers. All food purchases are normally handled through supermarket cash registers or the registers of the facility where your franchise is located.

We require you to purchase a computer system with Internet connectivity to permit you to submit purchase orders online and to obtain information on new products, product specifications and other information from us. We do not have specific brand or other computer system specifications. We estimate the cost of purchasing a computer system with Internet capabilities is about $600. You are solely responsible for your computer system, including maintaining and repairing it when necessary. The Franchise Agreement does not impose any obligation on you to purchase maintenance, update, upgrade or support contracts for your computer system. We do not currently require you to provide us independent access to the information generated or stored on your computer system, but may require you to do so in the future on written notice. We do not impose any upgrade or update obligations for your computer, but you must keep your computer current. You are also required to obtain and provide us an email address to which we may send written communications and sales reports pertaining to your location(s).

We require you to purchase a Samsung Tablet (Galaxy Tab A), scale, Dongle and printer ("Tablet System") meeting our specifications (See Exhibit "Q") to enable you to print labels for your products. We estimate the cost of purchasing the Tablet System and warranty ranging from $1,300 to $1,800 for each Food Service Counter you propose to open, plus shipping costs ranging from $10 to $100. You must also purchase pricing labels which are compatible with the label equipment. The cost of a set of labels is currently $152 per box (25 rolls), for an 800-count self-adhesive labels per roll, but may increase to $320 per box upon notice. Based on the number of products sold, the label cost will range from $456 to $960 over the first 3 months.. You must also pay the monthly System/Data Charge (currently $77 per month, up to $100 per month) for each Food Service Counter you operate. You are solely responsible for your Tablet System, including maintaining and repairing it when necessary. The Franchise Agreement does not impose any obligation on you to purchase maintenance, update, upgrade or support contracts for your Tablet. We can require you to provide us independent access to the information generated or stored on your tablet, including inventory tracking logs. You must keep the Tablet System current. We can require you to upgrade or update the Tablet System. We may, in the future, develop or designate computer application software for use with the Tablet System for performing various functions for your Food Service Counter(s). You must purchase, implement and use the software in operating the Food Service Counter(s) and comply with all standards we prescribe regarding the software, including upgrade and maintenance requirements.

ITEM 12 TERRITORY

We grant you a franchise for one or more specific location(s) in grocery stores or other venues. These locations will be specified in one or more franchise addendums. You do not receive any minimum territory. If on signing the franchise agreement or thereafter we agree that you may operate more than one location, you will sign our then current location addendum for each additional location to be opened and pay the applicable fee. We assess whether to grant you the right to operate another location, based on the following factors: availability of another location; the additional location is in a non-competing store; the new location is relatively near your existing location(s); in our judgment, you are financially able to operate multiple locations; in our judgment you are capable of operating and managing another franchise location; and you have qualified managers to assist you operate multiple locations. Our form location addendums are attached as Exhibits D through F.

You will not receive an exclusive territory. You may face competition from other franchisees, from outlets that we own, or from other channels of distribution or competitive brands that we control. We can grant franchises or licenses to others to operate Food Service Counters anywhere, regardless of how close they are to your Food Service Counter(s). We can sell products and other items to anyone and anywhere (even in the facilities where you operate), including, but not limited to, pre-packaged products and central kitchen products identified by our marks or other marks, whether or not such marks are authorized for your use, as well as other products or services under the marks and other trademarks and service marks. We may also sell and distribute products through different distribution channels, such as via the Internet, telemarketing, catalog sales, other direct marketing sales and other means. We are not required to compensate you for any sales we make through these methods. You can operate only at your grocery store (or other type of facility) location and you must comply with the store's (or other type of facility's) rules, policies and guidelines. If required by the facility owner, you must sign any code of conduct or equivalent document required by the facility owner.

Our affiliates, JFE, BSFI, and Bento USA grant franchises or licenses to others to operate businesses similar to our Food Service Counters in the United States. There is no territorial restriction on their operations and they can compete with you even in the same facility where you operate.

Other franchisees and we can solicit and advertise anywhere, including in the area where your Food Service Counter is located.

We can impose geographic and/or other restrictions on advertising that you conduct or propose to conduct.

You must only sell products to end customers who are physically present at your Food Service Counter(s). You may not engage in the resale of any product or supply at wholesale, retail or through other means without our written consent. You are not permitted to sell any product using other channels of distribution (such as the Internet, catalog sales or telemarketing).

If the location where you operate closes or objects to you operating there or otherwise becomes unavailable without your fault, we will try to help arrange for you to operate a Food Service Counter at another location in the same general area. There is no assurance we will be able to do so. The facility you relocate to may be month-to-month and can be terminated by the facility owner on short notice. You release us from any loss of right or consent to operate at the location and agree not to hold us liable for any such event occurring during or after the term of the agreement.

Unless you sign an additional location addendum, you do not get any right to acquire additional Food Service Counters. If we are satisfied with how you operate your initial Food Service Counter, we can agree to add one or more locations to your existing franchise agreement. See our location addendums attached as Exhibits D through F.

We can grant franchises to others using our trademarks and system, at any location. We can also sell through company owned outlets.

Other than JFE, BSFI, BNI, and Bento USA neither we nor our affiliates have any current plans to operate or franchise a business under a different trademark that sells goods or services similar to those to be sold at your Food Service Counter, but reserve the right to do so.

ITEM 13 TRADEMARKS

We let you use the logo that includes the words Zenshi, AFC, or Wild Blue, as applicable to your franchise. The logos are on the cover of this Disclosure Document. We also claim rights in the trade dress used in our display cases.

We own the following trademark registrations on the Principal Register of the U.S. Trademark Office which we let you use:

Mark	Reg. No.	Goods/ Services	Registration Date
AFC FRANCHISE CORP.	4,163,336	Rice	June 26, 2012 (Renewed: November 29, 2021)
AFC Franchise Corp.	4,166,625	Rice	July 3, 2012 (Renewed: November 30, 2021)
WILD BLUE	6,172,908	Restaurant services; Restaurant and café services; Restaurant and catering services; Fast-food restaurant services; Take-out restaurant services; Sushi; combination meals consisting primarily of prepared pasta and rice specially prepared in an Asian style; Combination meals consisting primarily of meat, poultry, seafood and vegetables specially prepared in an Asian style.	October 13, 2020
WILD BLUE	6,172,901	Restaurant services; Restaurant and café services; Restaurant and catering services; Fast-food restaurant services; Take-out restaurant services	October 13, 2020

Our corporate parent, AFCC obtained the following trademark registrations on the Principal Register of the U.S. Trademark Office which we let you use:

Mark	Reg. No.	Goods/ Services	Registration Date
SOUTHERN TSUNAMI	2,782,535	Sushi and related products, namely, bottled sauces, seasonings, pickled ginger, wasabi, rice and tea.	November 11, 2003 (Renewed: November 2, 2013 and June 7, 2023)
SOUTHERN TSUNAMI	2,780,243	Sushi and related products, namely, bottled sauces, seasonings, pickled ginger, prepared wasabi, rice and tea.	November 4, 2003 (Renewed: November 2, 2013 and June 7, 2023)
HYBRID SUSHI	4,277,991	Sushi and related products, namely, bottled sauces, seasonings, pickled ginger, prepared wasabi, rice and tea.	January 22, 2013 (Renewed: March 27, 2023)
Hybrid Sushi	4,277,992	Sushi and related products, namely, bottled sauces, seasonings, pickled ginger, prepared wasabi, rice and tea.	January 22, 2013 (Renewed: April 3, 2023)

Our corporate parent, AFCC has applied to register the following trademark on the Principal Register of the U.S. Trademark Office which we let you use:

Mark	Serial No.	Goods/ Services	Application Date
ZENSHI	97/806,598	Prepared, packaged and ready to eat Asian and Asian inspired meals, entrees, appetizers and beverages consisting primarily of beef, fish, seafood, poultry, pork, vegetables, and dairy, including sushi, sashimi and raw seafood, for consumption off the premises; retail and wholesale store advertising, management and administration services, including franchise system services, operation, sales and administration, for Asian and Asian	February 22, 2023

Mark	Serial No.	Goods/ Services	Application Date
		inspired fish, sea food, sushi, sashimi, beef, chicken, pork, vegetables, miso, rice, pasta, noodles, beverages, carbonated drinks, fruit juices, teas, and processed foods; retail packaging, arranging and delivering of goods and/or assortments of goods, namely, prepared and prepackaged Asian and Asian inspired meals, entrees, appetizers and beverages, including, fish, seafood, sushi, sashimi, beef, poultry, pork, vegetables, miso, rice, pasta, noodles, carbonated drinks, fruit juices, teas, and processed foods; retail and wholesale food preparation services for immediate consumption that features Asian and Asian inspired meals, entrees, appetizers, and beverages, including, fish, seafood, sushi, sashimi, beef, poultry, pork, vegetables, miso, rice, pasta, noodles, carbonated drinks, fruit juices, teas, and processed foods.	

The trademark in the table immediately above is not yet registered. Therefore, this trademark does not have as many legal benefits and rights as a federally registered trademark would have. If our right to use the trademark is challenged, you may have to change to an alternative trademark, which may increase your expenses.

You may only use the trademarks associated with the franchise concept you operate. We claim common law rights to all trade and service marks we license to you.

As of the issuance date of this Disclosure Document, we either filed or planned to file all required affidavits to maintain these registrations.

We use the trademark AFC. Some other food companies and restaurant franchise systems also use the initials AFC or logos that include these letters. We have found that some started before us, and some started after. The other uses of "AFC" include franchising or on food products. AFC is also used as a trademark for

many other goods and services having nothing to do with food or restaurants. Because our parent and we have used "AFC" continuously since at least 1989 without any known instance of confusion, we believe the marketplace has shown there is no material issue or risk of infringement or confusion.

We have a license from AFCC that lets us use and franchise you to use the marks "Zenshi," "Southern Tsunami," and "Hybrid Sushi". The agreement does not have a specific term; however, AFCC can terminate the license at any time. Termination forces us to stop granting new franchises under these brands, but does not affect franchises granted before termination. Because AFCC is our owner we do not expect the agreement to be terminated at any time that would be disruptive to us. Other than AFCC's right to terminate the license agreement as stated above, no agreement limits our right to use or license the use of the marks that are material to the franchise.

There are no currently effective material determinations of the Patent and Trademark Office, Trademark Trial and Appeal Board, trademark administrator of any state or any court regarding our principal trademarks. In some locations, your use of our trademarks will be limited by our agreement with the store.

You must tell us in writing if someone claims you are infringing a trademark, if you find out anyone else may be infringing our trademarks or claims rights to our marks or to a confusingly similar mark.

If you used our trademarks according to the Franchise Agreement, then we'll do what we think is appropriate to defend and indemnify you against someone else's claim that you infringed. We can defend or settle the claim using counsel we choose. You must cooperate with us. If someone else is infringing, then we will decide what we want to do about it. You can't make any claim on them. We have the right to control all administrative proceedings or litigation involving our marks.

If we say so, you must change or stop using our marks, or switch to a different mark, or use different marks. You must use the marks in the way we say to. We don't have to pay your expenses and you can't make any claim against us for changing or stopping your use of the marks.

ITEM 14 PATENTS, COPYRIGHTS AND PROPRIETARY INFORMATION

No patents are material to the franchise. You will learn information that we consider confidential and trade secret. This includes recipes, operating procedures and contents of training, and information on how we operate. The Franchise Agreement has provisions requiring you to keep all of this confidential.

We claim copyrights in our Standard Sanitation Operating Procedure and Methods Manual, Steam Table Manual and other written materials we provide to you. You will receive one set of manuals for each location you operate, except, no manuals are provided for self-service locations and the Steam Table Manual is only provided to locations with an operating steam table. You must return the manuals and other confidential information to us when your franchise agreement ends. (Fran. Agmt. Sec. 5.2.) When you return the manuals within 30 days of expiration or termination of the franchise agreement or an applicable addendum, we will refund to you the manual lease fees you paid (Fran. Agmt. Sec. 5.1).

There are no current determinations by the U.S. Copyright Office or any court regarding the copyright(s). We are not aware of any infringement of our copyrights.

You must tell us in writing if someone claims you are infringing our copyright(s), or if you find out anyone else may be infringing the copyright(s). The agreement does not specifically require us to defend and indemnify you against claims of copyright infringement. However, as our policy, if you use the manuals and other copyrights according to the Franchise Agreement, then we'll generally do what we think is appropriate to defend and indemnify you against someone else's claim that you infringed. If we choose to provide a defense, we will defend or settle the claim using counsel we choose. You must cooperate with us. If someone else is infringing, then we will decide what we want to do about it. You can't make any claim on them. We have the right to control all litigation involving our copyrights.

If we say so, you must stop using our copyrights, or use other copyrighted works we prepare. You must use our copyrights in the way we say to. We don't have to pay your expenses and you can't make any claim against us for changing or stopping use of the subject matter covered by our copyrights.

We also claim proprietary rights in our product recipes, methods of product preparation and operating procedures (Fran. Agmt. Sec. 6.1.) You must keep our secrets confidential while you are a franchisee and afterward, and you must not make any copies of them. You cannot use our secrets in any activity other than operating your franchise. You must use reasonable procedures that we request to help protect our secrets. (Fran. Agmt. Sec. 6.2.)

ITEM 15 OBLIGATION TO PARTICIPATE IN THE ACTUAL OPERATION OF THE FRANCHISE BUSINESS

For a full-time location, you or your principal owner (if you are an entity) must either directly or through a manager, devote your full time to managing the Food Service Counter and your employees.

For a part-time location, you or your principal owner (if you are an entity) must either directly or through a manager operate the Food Service Counter on a part-time basis each day that the location where the Food Service Counter is located is open for business. As a part-time Food Service Counter, you are not required to be personally present or have a manager personally present at the Food Service Counter more than four hours per day.

For a self-service location, to assure food safety compliance, you must perform all food preparation only at your already existing full-time or part-time Food Service Counter. To promote a consistent customer experience, the self-service Food Service Counter must be inspected and the display case restocked at least once daily with sufficient amount of sushi and/or other food products before trading hours each day as directed by the facility owner. We can revise these requirements.

If a location is operated by a manager, you are still required to be personally and actively involved in operations and remain fully responsible for each location including supervising your employees.

If you operate more than one location, then at least one employee with a ServSafe Manager Certification must act as manager under your supervision for those other locations. To assure we are aware of whom to contact at the location in the event of your absence, you must provide to us a written list of every manager you employ. You must update and provide a revised manager list to us in writing within 24 hours of any new manager being hired and any manager leaving your employment. You must abide by lawful requests of the business owner or manager of the premises regarding any employee or prospective employee. To protect the franchise system, before hiring a manager, you must require the manager to sign a confidentiality and non-disclosure agreement in a form satisfactory to us requiring the manager to protect our trade secrets and any other item we specify in writing from time to time. You must also provide adequate training to the manager before start of employment. There is no requirement for the manager to own any equity interest in you (if you are an entity, such as a corporation or limited liability company).

Your Food Service Counter(s) must be staffed by a sushi chef (if applicable to your location) before and during what we consider to be peak hours. To promote a consistent customer experience with the franchise system, you must also ensure that each Food Service Counter you operate is adequately staffed and that your display cases are adequately stocked during business hours.

You must not interfere with our relationship with the store where you are located. You must at all times act professionally and respectfully in dealing with customers, clients, the facility's personnel and our employees.

If you are an entity, we can require each of your owners and officers to sign a guaranty (the last pages of the Franchise Agreement and Location Addendums) in which he/she/they assume and agree to discharge all obligations of the "Franchisee" under the Agreements. In certain states we may require you to enter into your Franchise Agreement as an entity.

ITEM 16 RESTRICTIONS ON WHAT THE FRANCHISEE MAY SELL

You must offer and sell only items that we approve for sale at your Food Service Counter(s). If you want to offer other items, you must first get our written consent. We don't have to consent.

You must offer the full range of menu items that we designate. If you wish to remove any item from your menu, you must first get our approval in writing. We can add additional items to the menu from time to time and remove items from our menu. There is no limit on our right to make changes. We have the sole right to develop new items for sale at your Food Service Counter(s). You must not develop, offer or sell any non-approved item from your Food Service Counter(s).

You are not restricted with regard to customers you may sell products to. However, you must conduct your business only from the grocery store or other location where you are located. We can restrict where and how you advertise.

You must only sell products to customers who are physically present at your Zenshi Counter(s)/AFC Food Service Counter(s)/Wild Blue Location(s). You must not engage in the resale of any product or supply at wholesale, retail or through other means without our written consent. You may not use any other channels of distribution such as the Internet, catalog sales or telemarketing to conduct sales.

ITEM 17 RENEWAL, TERMINATION, TRANSFER AND DISPUTE RESOLUTION

THE FRANCHISE RELATIONSHIP

This table lists certain important provisions of the franchise and related agreements. You should read these provisions in the agreements attached to this Disclosure Document.

Provision	Sections In Franchise Agreement	Summary
a. Length of Franchise Term	Franchise Agmt. Section 2 Part-Time/Self-Service Location Franchise Addendums Section B Full Time Location Franchise Addendum Section C	Term of your agreement with us is five years. It could end earlier if the store or facility where you are located ends their agreement that permits our franchise to be there. If not terminated earlier, and if you meet all conditions, the term is renewable for an additional five years.
b. Renewal or extension of the term	Franchise Agmt. Sections 13.1-13.3	If you meet conditions, you can renew for an additional 5 years, as we determine. This is subject to our agreement with the store or facility owner where you are located.
c. Requirements for you to renew or extend	Franchise Agmt. Sections 13.1-13.3	Conditions to renew for an additional term are: (a) compliance with all agreements with us; (b) ability to keep all your location(s); (c) provide 180 to 360 days written notice of desire to renew; (d) sign our then current form of Agreement and applicable addendums at

Provision	Sections In Franchise Agreement	Summary
		least 30 days before the expiration date; (e) compliance with our then current qualifications and training; (f) bring Food Service Counter(s) into updated full compliance; and (g) pay our then current initial fee for each location you operate. You may be asked to sign agreements that contain materially different terms and conditions than your current agreements.
d. Termination by you	Franchise Agmt. Section 2	You can apply to us to terminate the Franchise Agreement early if you want, effective 90 days after written notice, or any earlier time that we agree in writing. We will accept or reject your request to terminate early within 30 days of your written request. If we fail to respond within the 30 day period, your request to terminate early will be deemed rejected (subject to state law).
e. Termination by us without cause	Franchise Agmt. Section 3.3 Self-Service Addendum Section F.1	We cannot terminate without cause, except that we can terminate any time if the facility where you are located ends their agreement with us. We can terminate the self-service addendum at any time, for any reason or no reason on 30 days written notice to you.
f. Termination by us with cause	Franchise Agmt. Sections 15.1-15.3 Part-Time/Self-Service Location Franchise Addendum Sec. F Full Time Location Franchise Addendum Section G	We may terminate if you default on any of your obligations. A default of one agreement/addendum with us, will at our election also constitute a default of every other agreement/addendum between you and us (subject to state law).
g. "Cause" defined – defaults which can be cured	Franchise Agmt. Section 15.2	You have 15 days to cure any curable defaults except where law requires longer. If you fail to cure in 15 days, we may terminate your franchise. Curable defaults are defaults not listed below in box h (subject to state law).
h. "Cause" defined – defaults which cannot be cured:	Franchise Agmt. Section 15.1	Except as prevented by law, non-curable defaults include: bankruptcy or insolvency[1]; voluntary or involuntary dissolution; levy against your assets; abandonment; loss of location; any complaint or dissatisfaction by owner or store manager of facility where franchise is located or objection by the facility owner or store manager to the continued operation of the Food Service Counter; conviction of felony or criminal misconduct; threat to public health or safety and/or failure to cure health and safety violations within 24 hours of notice; unlawful act, harassment or discrimination; unapproved transfer/assignment; breach of confidentiality or transfer restriction provisions of the franchise agreement; false statements in franchise

Provision	Sections In Franchise Agreement	Summary
		application or conduct which reflects materially and unfavorably on the operation and reputation of the franchise or franchise system; maintaining false books or records; submitting a false report; failure to discharge employee for embezzlement; interference with our other contractual relations; repeated failure to comply with Franchise Agreement; failure to cure misuse of Marks within 48 hours of notice; failure to satisfactorily complete our initial training program or to pass any required criminal background check and/or drug, tuberculosis or other chemical and disease testing; acts of dishonesty and/or moral turpitude (subject to state law).
i. Your obligations on termination/non-renewal	Franchise Agmt. Section 15.6	Obligations include: pay all amounts due to us and third parties including any expenses incurred because of your default; de-identification, no use of Marks; assign location to us and vacate premises; cancel assumed names; return manuals, customer lists, items showing our Marks and any other property of ours; return all property of the facility owner; pay expenses we incur; assign phone numbers; revise all websites and social media pages under your control to remove references to the Food Service Counter(s) and our Marks and system; at our request, assign to us all domains and social media accounts owned by you relating to the Food Service Counter(s); cooperate with us; and sign all documents we request to terminate your franchise; not destroy, damage, hide or take any equipment or inventory from the Food Service Counter without our written consent.
j. Assignment of contract by AFC	Franchise Agmt. Section 14.1	There is no restriction on our right to assign.
k. "Transfer" by you – defined	Franchise Agmt. Sections 14.2, 14.5	Includes transfer or assignment of Agreement or assets or ownership change, but excluding transfer of ownership from you individually to your entity.
l. AFC's approval of your transfer	Franchise Agmt. Sections 14.2, 14.5 and 14.9	We have the right to approve all transfers but will not unreasonably withhold approval. We have the right to withhold consent and probably will withhold consent to any transfer proposed to be entered into within 2 years of the date of the addendum for the location proposed to be transferred. We can also withhold approval if you plan on selling some but not all of your locations, if such locations are operated under one franchise agreement.

Provision	Sections In Franchise Agreement	Summary
m. Conditions for AFC's approval of transfer	Franchise Agmt. Section 14.9	You offer us right of first refusal, pay all amounts owing to us and any of our affiliates, pay transfer fee, sign general release and not take any security interest in assets of the business; terms of sale are not unduly burdensome to the new franchisee; new franchisee qualifies and cooperates with us, undergoes training, and signs current franchise agreement; owner of location where Food Service Counter is located consents; transaction closes within 90 days of us not exercising right of first refusal.
n. AFC's right of first refusal to buy your business	Franchise Agmt. Sections 14.6-14.7	We can match any offer for your business or offer of any sale.
o. AFC's option to buy your business	Franchise Agmt. Sections 14.6-14.7, 15.7 Part-Time/Self-Service Location Franchise Addendums Sections F.3-F.6. Full Time Location Franchise Addendum Section G.3-G.6.	We have option to buy your business under our right of first refusal and on expiration or termination of your agreement or any addendum. We also have the option to purchase any non-expired approved perishable inventory at your Food Service Counter(s) at the time of expiration or termination of your agreement or any addendum.
p. Your death or disability	Franchise Agmt. Sections 14.10, 14.11 and 14.12	Surviving heirs may operate the business if they can qualify within 180 days, or they may assign to an approved buyer. If we operate the business, we get reimbursed for our expenses and we get a management fee of up to $500 per day.
q. Non-competition covenants during term of franchise	Franchise Agmt. Section 6.4	You must deal exclusively with us. No involvement with competing business (subject to state law).
r. Non-competition covenants after franchise is terminated or expires	Franchise Agmt. Sections 6.4	No competing business for 2 years within 5 miles in a major city, 10 miles in a metropolitan area other than a major city, and 15 miles in a rural area, of any Food Service Counters associated with us. A "major city" means any of the top 25 cities in the U.S. measured by population; a "metropolitan city" means any city other than a major city where the population density is greater than 1,000 people per square mile; and a "rural area" means an area whose population density is 1,000 people per square miles or less. (subject to state law).
s. Modification of the agreement	Franchise Agmt. Section 16.4	No modification except in writing signed by you and us. Manuals may change, including Operating Manuals.
t. Integration/merger clause	Franchise Agmt. Section 16.3	Only the terms of the Franchise Agreement or other applicable agreement are binding (subject to state law). Other promises and representations are not enforceable. Nothing in the agreement is intended to disclaim our representations made in the franchise disclosure document.

Provision	Sections In Franchise Agreement	Summary
u. Dispute resolution by arbitration or mediation	Franchise Agmt. Section 16.8	Except for certain claims, all disputes must be arbitrated in Los Angeles, California, according to the rules of the American Arbitration Association (subject to state law). Failure to appear may cause a judgment of money to be awarded.
v. Choice of forum	Franchise Agmt. Sections 16.8	An action for a restraining order, injunctive or equable relief described in box x below may be brought in any court. All other claims must be arbitrated in Los Angeles, California, subject to state law.
w. Choice of law	Franchise Agmt. Section 16.7	California law applies, except that if any provision of the Agreement would not be enforceable under California law, and if the Food Service Counter is located outside of California and such provision would be enforceable under the laws of the state in which the Food Service Counter is located, then such provision will be interpreted and construed under the laws of the state where the Food Service Counter(s) is/are located.

See also state specific addenda attached to this Disclosure Document as Exhibit O.

This table lists certain important provisions of the General Release. You should read these provisions in the agreement attached to this Disclosure Document.

Provision	Sections In General Release	Summary
a. Length of Franchise Term	Not Applicable	Not Applicable
b. Renewal or extension of the term	Not Applicable	Not Applicable
c. Requirements for you to renew or extend	Not Applicable	Not Applicable
d. Termination by you	Not Applicable	Not Applicable (subject to state law)
e. Termination by us without cause	Not Applicable	Not Applicable
f. Termination by us with cause	Not Applicable	Not Applicable (subject to state law)
g. "Cause" defined – defaults which can be cured	Not Applicable	Not Applicable (subject to state law)
h. "Cause" defined – defaults which cannot be cured:	Not Applicable	Not Applicable (subject to state law)
i. Your obligations on termination/non-renewal	Not Applicable	Not Applicable
j. Assignment of contract by AFC	Not Applicable	Not Applicable
k. "Transfer" by you – defined	Not Applicable	Not Applicable
l. AFC's approval of your transfer	Not Applicable	Not Applicable
m. Conditions for AFC's approval of transfer	Not Applicable	Not Applicable
n. AFC's right of first refusal to buy your business	Not Applicable	Not Applicable

Provision	Sections In General Release	Summary
o. AFC's option to buy your business	Not Applicable	Not Applicable
p. Your death or disability	General Release Section 8.4	The General Release is binding on and inures to the benefit of the parties and their respective heirs, successors and permitted assigns.
q. Non-competition covenants during term of franchise	Not Applicable	Not Applicable (subject to state law)
r. Non-competition covenants after franchise is terminated or expires	Not Applicable	Not Applicable (subject to state law)
s. Modification of the agreement	General Release Section 8.1	The General Release cannot be modified, altered or otherwise amended except by an agreement in writing.
t. Integration/merger clause	General Release Section 8.2	Only the terms of the Release Agreement is binding (subject to state law). Other promises and representations are not enforceable. Nothing in the agreement is intended to disclaim our representations made in the franchise disclosure document.
u. Dispute resolution by arbitration or mediation	General Release Sections 6 and 8.8	All disputes must be arbitrated in Los Angeles, California, according to the rules of the American Arbitration Association (subject to state law). Failure to appear may cause a judgment of money to be awarded.
v. Choice of forum	General Release Sections 8.7 and 8.8	All claims, except as precluded by applicable law, must be arbitrated in Los Angeles, California and are subject to state law.
w. Choice of law	General Release Section 8.7	California law applies, except that if any provision of the Agreement would not be enforceable under California law, and if the Food Service Counter is located outside of California and such provision would be enforceable under the laws of the state in which the Food Service Counter is located, then such provision will be interpreted and construed under the laws of the state where the Food Service Counter is located.

This table lists certain important provisions of the Asset Sale and Purchase Agreement. You should read these provisions in the agreement attached to this Disclosure Document.

Provision	Sections In Asset Sale and Purchase Agreement	Summary
a. Length of Franchise Term	Not Applicable	Not Applicable
b. Renewal or extension of the term	Not Applicable	Not Applicable
c. Requirements for you to renew or extend	Not Applicable	Not Applicable
d. Termination by you	Secs. 6 & 9.1	You can terminate the Asset Purchase Agreement if the parties do not comply with the Bulk Sales Laws and this requirement has not been waived by you (subject to state law).

Provision	Sections In Asset Sale and Purchase Agreement	Summary
e. Termination by us without cause	Sec. 2.1	If the parties are not able to close the sale by the agreed on date we can terminate the Agreement.
f. Termination by us with cause	Secs. 7 & 9.1	We can terminate the Asset Purchase Agreement if your representations and warranties in the Agreement are incorrect, if you have not complied with all requirements and conditions of the Agreement, if you fail to provide information we require prior to closing, or if there are any actions or proceedings pertaining to the transactions contemplated by the agreement, and not waived by us (subject to state law).
g. "Cause" defined – defaults which can be cured	Not Applicable	Not Applicable (subject to state law)
h. "Cause" defined – defaults which cannot be cured:	Not Applicable	Not Applicable (subject to state law)
i. Your obligations on termination/non-renewal	Not Applicable	Not Applicable
j. Assignment of contract by AFC	Not Applicable	Not Applicable
k. "Transfer" by you – defined	Not Applicable	Not Applicable
l. AFC's approval of your transfer	Not Applicable	Not Applicable
m. Conditions for AFC's approval of transfer	Not Applicable	Not Applicable
n. AFC's right of first refusal to buy your business	Not Applicable	Not Applicable
o. AFC's option to buy your business	Not Applicable	Not Applicable
p. Your death or disability	Not Applicable	Not Applicable
q. Non-competition covenants during term of franchise	Not Applicable	Not Applicable (subject to state law)
r. Non-competition covenants after franchise is terminated or expires	Not Applicable	Not Applicable (subject to state law)
s. Modification of the agreement	Sec. 10.9	No modification except in writing signed by you and us.
t. Integration/merger clause	Sec. 10.5	Only terms of the Agreement and Exhibits are binding, subject to state law. Other promises and representations are not enforceable. Nothing in the agreement is intended to disclaim our representations made in the franchise disclosure document.
u. Dispute resolution by arbitration or mediation	Sec. 10.3	All disputes must be arbitrated in Los Angeles, California, according to the rules of the American Arbitration Association (subject to state law).
v. Choice of forum	Sec. 10.3	Arbitration to be held in Los Angeles, California, subject to state law
w. Choice of law	Sec. 10.4	California law applies, subject to state law.

This table lists certain important provisions of the Food Service Counter Transfer Agreement. You should read these provisions in the agreement attached to this Disclosure Document.

Provision	Sections In Food Service Counter Transfer Agreement	Summary
a. Length of Franchise Term	Not Applicable	Not Applicable
b. Renewal or extension of the term	Not Applicable	Not Applicable
c. Requirements for you to renew or extend	Not Applicable	Not Applicable
d. Termination by you	Not Applicable	Not Applicable (subject to state law)
e. Termination by us without cause	Not Applicable	Not Applicable
f. Termination by us with cause	Not Applicable	Not Applicable (subject to state law)
g. "Cause" defined – defaults which can be cured	Not Applicable	Not Applicable (subject to state law)
h. "Cause" defined – defaults which cannot be cured:	Not Applicable	Not Applicable (subject to state law)
i. Your obligations on termination/non-renewal	Not Applicable	Not Applicable
j. Assignment of contract by AFC	Not Applicable	Not Applicable
k. "Transfer" by you – defined	Not Applicable	Not Applicable
l. AFC's approval of your transfer	Not Applicable	Not Applicable
m. Conditions for AFC's approval of transfer	Not Applicable	Not Applicable
n. AFC's right of first refusal to buy your business	Not Applicable	Not Applicable
o. AFC's option to buy your business	Not Applicable	Not Applicable
p. Your death or disability	Not Applicable	Not Applicable
q. Non-competition covenants during term of franchise	Not Applicable	Not Applicable (subject to state law)
r. Non-competition covenants after franchise is terminated or expires	Not Applicable	Not Applicable (subject to state law)
s. Modification of the agreement	Sec. 13	No modification except in writing signed by you and us.
t. Integration/merger clause	Sec. 13	Only terms of the Agreement are binding. Other promises and representations are not enforceable (subject to state law). Nothing in the agreement is intended to disclaim our representations made in the franchise disclosure document.
u. Dispute resolution by arbitration or mediation	Sec. 10	All disputes must be arbitrated in Los Angeles, California, according to the rules of the American Arbitration Association (subject to state law).
v. Choice of forum	Sec. 10	Arbitration to be held in Los Angeles, California (subject to state law).
w. Choice of law	Sec. 9	California law applies (subject to state law).

This table lists certain important provisions of the Promissory Note. You should read these provisions in the agreement attached to this Disclosure Document.

Provision	Sections In Promissory Note	Summary
a. Length of Note Term	Sec. 1	The repayment term varies. You may pay off the Note earlier than its term.
b. Renewal or extension of the term	Not Applicable	Not Applicable
c. Requirements for you to renew or extend	Not Applicable	Not Applicable
d. Termination by you	Sec. 2	The Note is pre-payable on 30 days' notice(subject to state law).
e. Termination by us without cause	Not Applicable	Not Applicable
f. Termination by us with cause	Not Applicable	Not Applicable (subject to state law)
g. "Cause" defined – defaults which can be cured	Sec. 4	Failure to make any payment within 10 days after due date (subject to state law).
h. "Cause" defined – defaults which cannot be cured:	Sec. 4	Non-curable defaults are listed in the Franchise Agreement and in the Franchise Agreement chart above (subject to state law).
i. Your obligations on termination/non-renewal	Sec. 4	You must immediately pay remaining balance.
j. Assignment of contract by AFC	Sec. 13	No restrictions on our right to assign.
k. "Transfer" by you – defined	Sec. 13	You may not transfer or assign your obligations under the Note.
l. AFC's approval of your transfer	Sec. 13	You may not transfer or assign your obligations under the Note.
m. Conditions for AFC's approval of transfer	Sec. 13	You may not transfer or assign your obligations under the Note.
n. AFC's right of first refusal to buy your business	Not Applicable	Not Applicable
o. AFC's option to buy your business	Not Applicable	Not Applicable
p. Your death or disability	Not Applicable	Not Applicable
q. Non-competition covenants during term of franchise	Not Applicable	Not Applicable (subject to state law)
r. Non-competition covenants after franchise is terminated or expires	Not Applicable	Not Applicable (subject to state law)
s. Modification of the Note	Sec. 14	The Note cannot be modified or amended unless both parties agree in writing.
t. Integration/merger clause	Sec. 15	Only the terms of the Note are binding (subject to state law). Other promises and representations are not enforceable. Nothing in the Note is intended to disclaim our representations made in the franchise disclosure document.
u. Dispute resolution by arbitration or mediation	Not Applicable	Not Applicable (subject to state law).
v. Choice of forum	Sec. 12	Litigation may be brought in Los Angeles, California (subject to state law). We are not precluded from bringing an action in another court.
w. Choice of law	Sec. 9	California law applies (subject to state law).

Provision	Sections In Promissory Note	Summary
x. Acceleration	Sec. 4	If you fail to pay any installment within 10 days after its due date, or if you are in default under any of your other agreements or addendums with us, we can accelerate the Note and require you to pay entire unpaid balance and interest.

ITEM 18 PUBLIC FIGURES

We do not use any public figure to promote the franchise.

ITEM 19 FINANCIAL PERFORMANCE REPRESENTATIONS

The FTC's Franchise Rule permits a franchisor to provide information about the actual or potential financial performance of its franchised and/or franchisor-owned outlets, if there is a reasonable basis for the information, and if the information is included in the disclosure document. Financial performance information that differs from that included in Item 19 may be given only if: (1) a franchisor provides the actual records of an existing outlet you are considering buying; or (2) a franchisor supplements the information provided in this Item 19, for example, by providing information about possible performance at a particular location or under particular circumstances.

We do not make any representations about a franchisee's future financial performance or the past financial performance of company-owned or franchised outlets. We also do not authorize our employees or representatives to make any such representations either orally or in writing. If you are purchasing an existing outlet, however, we may provide you with the actual records of that outlet. If you receive any other financial performance information or projections of your future income, you should report it to the franchisor's management by contacting Vincenzo Calcagni, 19700 Mariner Avenue, Torrance, California 90503, Telephone: (310) 604-3200, the Federal Trade Commission, and the appropriate state regulatory agencies.

ITEM 20 OUTLETS AND FRANCHISEE INFORMATION

Table No. 1
Systemwide Outlet Summary
Zenshi Counters
for the years ended March 31 2024, 2025, and 2026[1]

Outlet Type	Year	Outlets at the Start of the Year	Outlets and the End of the Year	Net Change
Franchised	2024	0	2,217	+2,217
	2025	2,217	3,572	+1,355
	2026	3,572	2,974	-598
Company Owned	2024	0	57	+57
	2025	57	191	+134
	2026	191	81	-110
Total Outlets	**2024**	**0**	**2,274**	**+2,274**
	2025	**2,274**	**3,763**	**+1,489**
	2026	**3,763**	**3,055**	**-708**

1. We rebranded many of our AFC Counters to "Zenshi" in fiscal year ending March 31, 2024. As a result, the number of outlets listed as open as of March 31, 2024 was abnormally high.

Table No. 2
Transfers of Outlets from Franchisees to New Owners (other than the franchisor)
Zenshi Counters
For the years ended March 31 2024, 2025, and 2026

State	Year	Number of Transfers
Alaska	2024	0
	2025	3
	2026	2
Alabama	2024	1
	2025	3
	2026	2
Arizona	2024	0
	2025	0
	2026	3
California	2024	1
	2025	47
	2026	16
Colorado	2024	1
	2025	10
	2026	10
Connecticut	2024	0
	2025	3
	2026	5
Florida	2024	3
	2025	48
	2026	54
Georgia	2024	11
	2025	31
	2026	15
Hawaii	2024	0
	2025	2
	2026	2
Idaho	2024	0
	2025	3
	2026	1
Illinois	2024	0
	2025	9
	2026	3
Indiana	2024	1
	2025	10
	2026	9
Kansas	2024	2
	2025	5
	2026	0
Kentucky	2024	0
	2025	8
	2026	9
Louisiana	2024	0
	2025	3
	2026	2

State	Year	Number of Transfers
Maryland	2024	0
	2025	0
	2026	3
Massachusetts	2024	0
	2025	5
	2026	3
Michigan	2024	0
	2025	1
	2026	0
Minnesota	2024	0
	2025	4
	2026	0
Mississippi	2024	0
	2025	3
	2026	0
North Carolina	2024	0
	2025	17
	2026	21
Nebraska	2024	0
	2025	4
	2026	0
Nevada	2024	0
	2025	0
	2026	2
New Mexico	2024	0
	2025	3
	2026	2
New York	2024	0
	2025	2
	2026	2
Oregon	2024	0
	2025	7
	2026	3
South Carolina	2024	0
	2025	5
	2026	4
Tennessee	2024	0
	2025	13
	2026	11
Texas	2024	0
	2025	10
	2026	17
Utah	2024	0
	2025	1
	2026	1
Virginia	2024	0
	2025	1
	2026	3

State	Year	Number of Transfers
Vermont	2024	0
	2025	1
	2026	0
Washington	2024	1
	2025	7
	2026	2
Wisconsin	2024	0
	2025	1
	2026	0
TOTALS:	**2024**	**21**
	2025	**270**
	2026	**208**

Table No. 3
Status of Franchised Outlets
Zenshi Counters
For years ended March 31, 2024, 2025, and 2026 [1, 2]

State	Year	Outlets at Start of Year	Outlets Opened[3]	Termina -tions[3]	Non – Renewals[3]	Reacquired by Franchisor	Ceased Operations / Other Reasons[3]	Outlets at End of Year[3]
Alabama	2024	0	90	0	0	0	0	90
	2025	90	17	4	2	1	0	100
	2026	100	13	2	0	0	6	105
Alaska	2024	0	18	1	0	0	0	17
	2025	17	9	1	2	1	0	22
	2026	22	0	0	1	0	0	21
Arizona	2024	0	12	0	0	0	0	12
	2025	12	72	6	4	5	0	69
	2026	69	18	9	3	0	0	75
Arkansas	2024	0	0	0	0	0	0	0
	2025	0	1	0	0	0	0	1
	2026	1	0	0	0	0	0	1
California	2024	0	255	0	0	0	0	255
	2025	255	280	35	4	23	4	469
	2026	469	4	35	7	0	133	298
Colorado	2024	0	33	0	0	0	0	33
	2025	33	52	9	0	9	0	67
	2026	67	0	11	0	0	0	56
Connecticut	2024	0	0	0	0	0	0	0
	2025	0	40	0	0	0	1	39
	2026	39	2	1	0	0	0	40
Delaware	2024	0	0	0	0	0	0	0
	2025	0	2	0	0	0	0	2
	2026	2	1	0	0	0	0	3
District Of Columbia Washington, D.C.	2024	0	0	0	0	0	0	0
	2025	0	1	0	0	0	0	1
	2026	1	3	0	0	0	0	4

State	Year	Outlets at Start of Year	Outlets Opened[3]	Termina -tions[3]	Non – Renewals[3]	Reacquired by Franchisor	Ceased Operations / Other Reasons[3]	Outlets at End of Year[3]
Florida	2024	0	549	0	0	0	1	548
	2025	548	368	15	1	12	9	879
	2026	879	41	16	3	0	7	894
Georgia	2024	0	343	0	0	0	1	342
	2025	342	59	18	1	11	2	369
	2026	369	17	5	2	0	152	227
Hawaii	2024	0	24	0	0	0	0	24
	2025	24	4	0	0	0	1	27
	2026	27	1	0	0	0	0	28
Idaho	2024	0	25	0	0	0	0	25
	2025	25	8	2	0	2	2	27
	2026	27	0	1	0	0	9	17
Illinois	2024	0	142	3	1	0	0	138
	2025	138	67	19	2	15	2	167
	2026	167	12	22	2	0	13	142
Indiana	2024	0	78	0	0	0	0	78
	2025	78	52	4	0	2	1	123
	2026	123	1	8	0	0	83	33
Kansas	2024	0	8	0	0	0	0	8
	2025	8	36	0	0	0	0	44
	2026	44	0	5	0	0	36	3
Kentucky	2024	0	69	0	0	0	0	69
	2025	69	8	2	0	1	0	74
	2026	74	3	9	1	0	59	8
Louisiana	2024	0	0	0	0	0	0	0
	2025	0	38	0	1	0	26	11
	2026	11	0	3	0	0	0	8
Maine	2024	0	0	0	0	0	0	0
	2025	0	6	2	0	2	0	2
	2026	2	0	0	0	0	0	2
Maryland	2024	0	9	0	0	0	0	9
	2025	9	7	2	1	1	0	12
	2026	12	14	4	0	0	0	22
Massachusetts	2024	0	18	0	0	0	0	18
	2025	18	67	11	0	10	0	64
	2026	64	6	3	0	0	0	67
Michigan	2024	0	1	0	0	0	0	1
	2025	1	2	0	0	0	0	3
	2026	3	0	0	0	0	0	3
Minnesota	2024	0	0	0	0	0	0	0
	2025	0	13	0	1	0	0	12
	2026	12	0	0	0	0	0	12
Mississippi	2024	0	0	0	0	0	0	0
	2025	0	4	0	1	0	0	3
	2026	3	0	0	0	0	0	3

State	Year	Outlets at Start of Year	Outlets Opened[3]	Termina -tions[3]	Non – Renewals[3]	Reacquired by Franchisor	Ceased Operations / Other Reasons[3]	Outlets at End of Year[3]
Missouri	2024	0	4	0	0	0	0	4
	2025	4	41	4	0	3	1	37
	2026	37	0	1	0	0	34	2
Montana	2024	0	20	0	0	0	0	20
	2025	20	5	3	0	3	0	19
	2026	19	1	0	0	0	0	20
Nebraska	2024	0	0	0	0	0	0	0
	2025	0	11	0	0	0	0	11
	2026	11	0	0	0	0	10	1
Nevada	2024	0	4	0	0	0	0	4
	2025	4	15	3	0	3	0	13
	2026	13	0	3	0	0	2	8
New Hampshire	2024	0	0	0	0	0	0	0
	2025	0	2	0	0	0	0	2
	2026	2	2	0	0	0	0	4
New Jersey	2024	0	0	0	0	0	0	0
	2025	0	2	0	0	0	0	2
	2026	2	0	0	0	0	0	2
New Mexico	2024	0	3	0	0	0	0	3
	2025	3	29	2	0	0	0	30
	2026	30	4	2	0	0	0	32
New York	2024	0	0	0	0	0	0	0
	2025	0	52	17	2	17	1	15
	2026	15	0	2	0	0	9	4
North Carolina	2024	0	126	0	0	0	0	126
	2025	126	71	10	0	7	0	180
	2026	180	38	4	0	0	1	213
North Dakota	2024	0	0	0	0	0	0	0
	2025	0	2	0	0	0	0	2
	2026	2	0	0	0	0	0	2
Ohio	2024	0	2	0	0	0	0	2
	2025	2	1	0	0	0	0	3
	2026	3	0	0	0	0	2	1
Oklahoma	2024	0	0	0	0	0	0	0
	2025	0	4	0	1	0	0	3
	2026	3	1	1	0	0	0	3
Oregon	2024	0	41	0	0	0	0	41
	2025	41	40	11	0	10	0	60
	2026	60	1	5	2	0	9	45
Puerto Rico	2024	0	0	0	0	0	0	0
	2025	0	1	0	0	0	0	1
	2026	1	0	0	0	0	0	1
Rhode Island	2024	0	0	0	0	0	0	0
	2025	0	3	0	0	0	0	3
	2026	3	0	0	0	0	0	3

State	Year	Outlets at Start of Year	Outlets Opened[3]	Termina -tions[3]	Non – Renewals[3]	Reacquired by Franchisor	Ceased Operations / Other Reasons[3]	Outlets at End of Year[3]
South Carolina	2024	0	79	0	0	0	0	79
	2025	79	36	4	1	4	1	105
	2026	105	3	0	0	0	0	108
South Dakota	2024	0	3	0	0	0	0	3
	2025	3	0	0	0	0	0	3
	2026	3	1	0	0	0	0	4
Tennessee	2024	0	102	0	0	0	0	102
	2025	102	7	4	0	2	1	102
	2026	102	9	4	0	0	44	63
Texas	2024	0	39	0	0	0	0	39
	2025	39	104	5	2	5	0	131
	2026	131	6	3	0	0	5	129
Utah	2024	0	0	0	0	0	0	0
	2025	0	5	0	1	0	0	4
	2026	4	0	0	0	0	0	4
Vermont	2024	0	0	0	0	0	0	0
	2025	0	6	0	0	0	0	6
	2026	6	0	0	0	0	0	6
Virginia	2024	0	55	0	0	0	0	55
	2025	55	21	5	0	2	1	68
	2026	68	22	5	0	0	1	84
Washington	2024	0	52	2	0	0	0	50
	2025	50	120	10	3	8	1	148
	2026	148	1	8	0	0	12	129
West Virginia	2024	0	22	0	0	0	0	22
	2025	22	2	0	0	0	0	24
	2026	24	0	0	0	0	24	0
Wisconsin	2024	0	0	0	0	0	0	0
	2025	0	1	0	0	0	0	1
	2026	1	1	1	0	0	0	1
Wyoming	2024	0	0	0	0	0	0	0
	2025	0	12	0	0	0	0	12
	2026	12	0	0	0	0	0	12
TOTALS:	**2024**	**0**	**2,226**	**6**	**1**	**0**	**2**	**2,217**
	2025	**2,217**	**1,806**	**208**	**30**	**159**	**54**	**3,572**
	2026	**3,572**	**252**	**174**	**18**	**0**	**658**	**2,974**

1. Our fiscal year end is March 31.

2. For some entries in the above chart, after a franchisee stopped operating a location due to termination, nonrenewal or other reason, and without AFC taking over operation, another franchisee was granted a franchise for the location. The location may have operated continuously, without interruption, or only a brief closure. In the table, these are counted as "Outlets Opened." See Exhibit M for more detailed information on the number of new outlets (outlets not previously in existence) opened in our last fiscal year.

3. We rebranded many of our AFC Counters to "Zenshi" in fiscal year ending March 31, 2024. As a result, the number of outlets listed as open as of March 31, 2024 was abnormally high.

Table No. 4
Status of Company-Owned Outlets
Zenshi Counters
For the years ended March 31, 2024, 2025, and 2026

State	Year	Outlets at Start of Year	Outlets Opened[1]	Outlets Reacquired From Franchisees	Outlets Closed[2]	Outlets Sold To Franchisee	Outlets at End of the Year
Alabama	2024	0	1	3	0	0	4
	2025	4	1	1	0	2	4
	2026	4	0	0	3	1	0
Alaska	2024	0	0	1	0	0	1
	2025	1	0	1	0	1	1
	2026	1	0	0	0	0	1
Arizona	2024	0	0	0	0	0	0
	2025	0	1	5	0	0	6
	2026	6	2	0	3	2	3
California	2024	0	0	1	0	0	1
	2025	1	0	23	10	0	14
	2026	14	2	0	2	3	11
Colorado	2024	0	0	2	0	0	2
	2025	2	0	9	3	2	6
	2026	6	7	0	0	0	13
Connecticut	2024	0	0	0	0	0	0
	2025	0	0	0	0	0	0
	2026	0	1	0	0	0	1
Delaware	2024	0	0	2	0	0	2
	2025	2	0	0	0	1	1
	2026	1	0	0	1	0	0
Florida	2024	0	0	0	0	0	0
	2025	0	0	12	8	0	4
	2026	4	0	0	0	2	2
Georgia	2024	0	1	0	0	0	1
	2025	1	0	11	9	1	2
	2026	2	2	0	4	0	0
Idaho	2024	0	1	1	0	0	2
	2025	2	0	2	0	1	3
	2026	3	0	0	1	0	2
Illinois	2024	0	1	11	0	0	12
	2025	12	3	15	0	1	29
	2026	29	0	0	23	0	6
Indiana	2024	0	1	0	0	0	1
	2025	1	0	2	1	1	1
	2026	1	3	0	0	0	4
Kentucky	2024	0	0	0	0	0	0
	2025	0	1	1	0	0	2
	2026	2	0	0	2	0	0

State	Year	Outlets at Start of Year	Outlets Opened[1]	Outlets Reacquired From Franchisees	Outlets Closed[2]	Outlets Sold To Franchisee	Outlets at End of the Year
Louisiana	2024	0	0	0	0	0	0
	2025	0	4	0	4	0	0
	2026	0	0	0	0	0	0
Maine	2024	0	0	0	0	0	0
	2025	0	3	2	0	0	5
	2026	5	0	0	5	0	0
Maryland	2024	0	0	2	0	0	2
	2025	2	2	1	0	1	4
	2026	4	0	0	4	0	0
Massachusetts	2024	0	2	3	0	0	5
	2025	5	0	10	6	0	9
	2026	9	2	0	9	0	2
Mississippi	2024	0	0	0	0	0	0
	2025	0	0	0	0	0	0
	2026	0	1	0	1	0	0
Missouri	2024	0	0	0	0	0	0
	2025	0	2	3	0	0	5
	2026	5	0	0	5	0	0
Montana	2024	0	1	0	0	0	1
	2025	1	0	3	0	1	3
	2026	3	0	0	1	0	2
Nevada	2024	0	0	0	0	0	0
	2025	0	0	3	3	0	0
	2026	0	1	0	0	0	1
New Hampshire	2024	0	0	0	0	0	0
	2025	0	4	0	1	0	3
	2026	3	0	0	3	0	0
New York	2024	0	0	0	0	0	0
	2025	0	1	17	0	0	18
	2026	18	1	0	19	0	0
North Carolina	2024	0	0	0	0	0	0
	2025	0	0	7	3	0	4
	2026	4	1	0	4	1	0
Oregon	2024	0	3	2	0	0	5
	2025	5	4	10	0	3	16
	2026	16	1	0	9	0	8
Pennsylvania	2024	0	0	0	0	0	0
	2025	0	3	0	0	0	3
	2026	3	0	0	2	0	1
Rhode Island	2024	0	0	0	0	0	0
	2025	0	1	0	0	0	1
	2026	1	0	0	1	0	0
South Carolina	2024	0	1	0	0	0	1
	2025	1	0	4	2	0	3
	2026	3	0	0	2	0	1

State	Year	Outlets at Start of Year	Outlets Opened[1]	Outlets Reacquired From Franchisees	Outlets Closed[2]	Outlets Sold To Franchisee	Outlets at End of the Year
South Dakota	2024	0	0	0	0	0	0
	2025	0	2	0	1	0	1
	2026	1	0	0	1	0	0
Tennessee	2024	0	0	0	0	0	0
	2025	0	0	2	0	0	2
	2026	2	0	0	1	0	1
Texas	2024	0	0	0	0	0	0
	2025	0	1	5	4	0	2
	2026	2	1	0	2	1	0
Virginia	2024	0	0	1	0	0	1
	2025	1	0	2	0	1	2
	2026	2	4	0	0	3	3
Vermont	2024	0	0	0	0	0	0
	2025	0	0	0	0	0	0
	2026	0	1	0	0	0	1
Washington	2024	0	8	8	0	0	16
	2025	16	16	8	0	4	36
	2026	36	5	0	23	0	18
Wisconsin	2024	0	0	0	0	0	0
	2025	0	1	0	0	0	1
	2026	1	0	0	1	0	0
TOTALS:	**2024**	**0**	**20**	**37***	**0**	**0**	**57**
	2025	**57**	**50**	**159**	**55**	**20**	**191**
	2026	**191**	**35**	**0**	**132**	**13**	**81**

* In fiscal year ending March 31, 2024, all 37 "Zenshi" outlets listed as reacquired from franchisees are former AFC Food Service Counters we reacquired from franchisees and rebranded as company-owned Zenshi Counters.

Table No. 5
Zenshi Counters
Projected Openings as of March 31, 2026

State	Franchise Agreements Signed But Outlet Not Opened	Projected New Franchised Outlet in the Next Fiscal Year	Projected New Company-Owned Outlets in the Next Fiscal Year
Alabama	0	0	1
Arizona	0	1	1
California	0	2	2
Florida	2	2	3
Georgia	0	1	0
Idaho	0	0	0
Illinois	0	0	0
Indiana	0	0	5
Kentucky	1	3	3
Louisiana	0	0	2

State	Franchise Agreements Signed But Outlet Not Opened	Projected New Franchised Outlet in the Next Fiscal Year	Projected New Company-Owned Outlets in the Next Fiscal Year
Massachusetts	0	0	0
Maine	1	0	1
New Mexico	0	0	0
New York	0	0	0
North Carolina	0	1	2
Ohio	0	0	1
Oregon	0	0	0
South Carolina	0	0	1
Tennessee	0	1	4
Texas	0	1	0
Vermont	0	0	0
Virginia	0	0	0
Washington	0	0	6
West Virginia	0	0	0
TOTALS	4	12	32

Table No. 1
Systemwide Outlet Summary
AFC Food Service Counters
for the years ended March 31, 2024, 2025, and 2026[1]

Outlet Type	Year	Outlets at the Start of the Year	Outlets and the End of the Year	Net Change
Franchised	2024	4,069	1,857	-2,212
	2025	1,857	434	-1,423
	2026	434	772	+338
Company Owned	2024	205	140	-65
	2025	140	51	-89
	2026	51	43	-9
Total Outlets	**2024**	**4,275**	**1,997**	**-2,278**
	2025	**1,997**	**485**	**-1,512**
	2026	**485**	**815**	**+330**

1. We rebranded many of our AFC Counters to "Zenshi" in fiscal year ending March 31, 2024. As a result, the number of AFC outlets that ceased operations in the above table increased exponentially as of March 31, 2024. While many outlets ceased operating as AFC Counters, the majority are continuing to operate as Zenshi Counters.

Table No. 2
Transfers of Outlets from Franchisees to New Owners (other than the franchisor)
AFC Food Service Counters
For the years ended March 31, 2024, 2025, and 2026

State	Year	Number of Transfers
Alabama	2024	7
	2025	0
	2026	0

State	Year	Number of Transfers
Alaska	2024	2
	2025	1
	2026	0
Arizona	2024	8
	2025	0
	2026	3
California	2024	48
	2025	4
	2026	30
Colorado	2024	14
	2025	1
	2026	0
Connecticut	2024	2
	2025	3
	2026	1
Florida	2024	52
	2025	0
	2026	0
Georgia	2024	38
	2025	0
	2026	0
Hawaii	2024	4
	2025	0
	2026	1
Idaho	2024	4
	2025	2
	2026	0
Iowa	2024	1
	2025	1
	2026	0
Illinois	2024	10
	2025	0
	2026	0
Indiana	2024	10
	2025	1
	2026	0
Kansas	2024	7
	2025	2
	2026	1
Kentucky	2024	9
	2025	1
	2026	0
Louisiana	2024	4
	2025	0
	2026	0
Maryland	2024	4
	2025	0
	2026	0

State	Year	Number of Transfers
Massachusetts	2024	1
	2025	2
	2026	0
Michigan	2024	0
	2025	0
	2026	0
Minnesota	2024	2
	2025	2
	2026	0
Missouri	2024	4
	2025	0
	2026	0
Montana	2024	1
	2025	0
	2026	0
Nebraska	2024	4
	2025	3
	2026	2
Nevada	2024	1
	2025	0
	2026	0
New Mexico	2024	3
	2025	3
	2026	1
New York	2024	5
	2025	0
	2026	6
North Carolina	2024	31
	2025	0
	2026	0
Ohio	2024	0
	2025	0
	2026	0
Oklahoma	2024	1
	2025	0
	2026	0
Oregon	2024	4
	2025	0
	2026	5
Rhode Island	2024	0
	2025	0
	2026	0
South Carolina	2024	7
	2025	0
	2026	0
Tennessee	2024	12
	2025	0
	2026	1

State	Year	Number of Transfers
Texas	2024	10
	2025	1
	2026	2
Virginia	2024	7
	2025	0
	2026	0
Washington	2024	14
	2025	1
	2026	1
West Virginia	2024	1
	2025	0
	2026	0
Wyoming	2024	1
	2025	0
	2026	0
TOTALS:	**2024**	**333**
	2025	**28**
	2026	**54**

Table No. 3
Status of Franchised Outlets
AFC Food Service Counters
For years ended March 31, 2024, 2025, and 2026 [1, 3]

State	Year	Outlets at Start of Year	Outlets Opened[2]	Termina -tions[2]	Non – Renewals[2]	Reacquired by Franchisor	Ceased Operations / Other Reasons[2]	Outlets at End of Year[2]
Alaska	2024	22	3	2	0	0	17	6
	2025	6	0	0	1	0	4	1
	2026	1	1	0	0	0	0	2
Alabama	2024	109	14	5	2	3	90	23
	2025	23	0	3	0	3	9	8
	2026	8	0	0	0	0	5	3
Arkansas	2024	2	1	1	0	0	0	2
	2025	2	0	0	0	0	1	1
	2026	1	0	0	0	0	0	1
Arizona	2024	106	21	13	1	5	12	96
	2025	96	0	3	1	3	52	37
	2026	37	6	7	0	0	1	35
California	2024	594	26	16	3	5	275	321
	2025	321	0	4	3	2	217	95
	2026	95	176	8	0	0	25	238
Colorado	2024	73	11	6	4	2	33	39
	2025	39	0	0	0	0	37	2
	2026	2	0	0	0	0	0	2
Connecticut	2024	45	10	6	1	2	0	46
	2025	46	1	0	0	0	37	10
	2026	10	0	0	0	0	1	9

State	Year	Outlets at Start of Year	Outlets Opened[2]	Termina -tions[2]	Non – Renewals[2]	Reacquired by Franchisor	Ceased Operations / Other Reasons[2]	Outlets at End of Year[2]
District Of Columbia (Wash, D.C.)	2024	7	1	0	0	0	0	8
	2025	8	1	0	0	0	3	6
	2026	6	0	0	0	0	2	4
Delaware	2024	3	0	0	2	0	0	1
	2025	1	0	0	0	0	1	0
	2026	0	0	0	0	0	0	0
Florida	2024	868	37	13	0	0	555	337
	2025	337	0	1	0	1	323	12
	2026	12	0	0	0	0	1	11
Georgia	2024	347	19	4	0	0	342	20
	2025	20	0	1	0	1	16	2
	2026	2	0	0	0	0	0	2
Hawaii	2024	38	3	0	0	0	24	17
	2025	17	0	0	0	0	6	11
	2026	11	0	1	0	0	5	5
Idaho	2024	23	9	3	0	1	25	3
	2025	3	0	0	0	0	2	1
	2026	1	11	0	0	0	0	12
Iowa	2024	1	0	0	0	0	0	1
	2025	1	0	0	0	0	0	1
	2026	1	0	0	0	0	1	0
Illinois	2024	185	10	7	3	2	139	44
	2025	44	0	0	2	0	35	7
	2026	7	10	0	0	0	0	17
Indiana	2024	117	13	9	0	0	80	41
	2025	41	0	0	0	0	40	1
	2026	1	84	0	0	0	1	84
Kansas	2024	42	1	0	0	0	8	35
	2025	35	0	0	0	0	35	0
	2026	0	41	0	0	0	1	40
Kentucky	2024	73	3	1	0	0	69	6
	2025	6	1	1	0	1	3	2
	2026	2	67	0	0	0	1	68
Louisiana	2024	68	8	4	0	4	22	46
	2025	46	0	1	0	0	44	1
	2026	1	0	0	0	0	1	0
Massachusetts	2024	84	12	11	0	0	19	66
	2025	66	0	0	0	0	49	17
	2026	17	0	2	0	0	1	14
Maryland	2024	27	5	5	0	2	9	16
	2025	16	0	0	1	0	4	11
	2026	11	0	0	0	0	8	3
Maine	2024	4	0	0	0	0	0	4
	2025	4	0	0	0	0	4	0
	2026	0	0	0	0	0	0	0

State	Year	Outlets at Start of Year	Outlets Opened[2]	Termina -tions[2]	Non – Renewals[2]	Reacquired by Franchisor	Ceased Operations / Other Reasons[2]	Outlets at End of Year[2]
Michigan	2024	4	0	0	0	0	1	3
	2025	3	0	0	1	0	2	0
	2026	0	0	0	0	0	0	0
Minnesota	2024	16	3	1	0	1	1	16
	2025	16	0	2	0	0	9	5
	2026	5	1	1	0	0	0	5
Missouri	2024	44	2	3	0	2	4	37
	2025	37	0	0	0	0	37	0
	2026	0	2	0	0	0	0	2
Mississippi	2024	7	1	0	0	0	1	7
	2025	7	0	1	0	1	4	1
	2026	1	0	0	0	0	1	0
Montana	2024	20	4	3	0	0	20	1
	2025	1	0	0	0	0	1	0
	2026	0	0	0	0	0	0	0
North Carolina	2024	210	2	3	0	1	126	82
	2025	82	2	0	2	0	53	29
	2026	29	0	0	0	0	24	5
North Dakota	2024	2	1	1	0	1	0	1
	2025	1	0	0	0	0	1	0
	2026	0	0	0	0	0	0	0
Nebraska	2024	11	1	1	0	0	0	11
	2025	11	0	0	0	0	11	0
	2026	0	10	0	0	0	0	10
New Hampshire	2024	3	1	0	0	0	0	4
	2025	4	0	0	0	0	0	4
	2026	4	0	0	0	0	2	2
New Jersey	2024	3	0	0	0	0	2	1
	2025	1	0	0	0	0	1	0
	2026	0	0	0	0	0	0	0
New Mexico	2024	29	3	2	0	0	3	27
	2025	27	0	0	0	0	27	0
	2026	0	0	0	0	0	0	0
Nevada	2024	11	0	0	0	0	4	7
	2025	7	0	0	0	0	5	2
	2026	2	0	0	0	0	0	2
New York	2024	71	22	9	2	2	4	76
	2025	76	3	1	1	0	23	54
	2026	54	5	10	0	0	6	43
Ohio	2024	13	0	1	0	0	7	5
	2025	5	0	0	0	0	1	4
	2026	4	3	0	0	0	1	6
Oklahoma	2024	7	1	0	0	0	2	6
	2025	6	1	1	1	0	2	3
	2026	3	0	0	0	0	2	1

State	Year	Outlets at Start of Year	Outlets Opened[2]	Termina -tions[2]	Non – Renewals[2]	Reacquired by Franchisor	Ceased Operations / Other Reasons[2]	Outlets at End of Year[2]
Oregon	2024	68	15	9	1	3	41	29
	2025	29	0	0	1	0	25	3
	2026	3	24	0	0	0	0	27
Pennsylvania	2024	18	0	1	1	1	5	10
	2025	10	0	1	0	1	2	6
	2026	6	2	0	0	0	3	5
Puerto Rico	2024	1	0	0	0	0	0	1
	2025	1	0	0	0	0	1	0
	2026	0	0	0	0	0	0	0
Rhode Island	2024	12	1	0	0	0	0	13
	2025	13	0	0	0	0	3	10
	2026	10	0	0	0	0	10	0
South Carolina	2024	110	13	5	3	0	80	35
	2025	35	2	0	0	0	28	9
	2026	9	0	1	0	0	7	1
South Dakota	2024	6	2	2	0	0	3	3
	2025	3	0	0	0	0	1	2
	2026	2	0	0	0	0	2	0
Tennessee	2024	108	11	5	0	0	102	12
	2025	12	1	2	0	2	0	9
	2026	9	0	0	0	0	0	9
Texas	2024	157	9	4	0	3	40	119
	2025	119	2	0	0	0	101	20
	2026	20	0	0	0	0	2	18
Utah	2024	6	0	1	0	0	1	4
	2025	4	0	0	0	0	4	0
	2026	0	0	0	0	0	0	0
Virginia	2024	88	15	11	0	4	56	32
	2025	32	3	0	0	0	11	24
	2026	24	0	0	0	0	19	5
Vermont	2024	13	0	0	0	0	1	12
	2025	12	1	0	0	0	4	9
	2026	9	0	1	0	0	0	8
Washington	2024	159	27	11	4	9	51	111
	2025	111	0	0	0	0	97	14
	2026	14	37	0	1	0	2	48
Wisconsin	2024	3	0	0	0	0	2	1
	2025	1	0	0	0	0	1	0
	2026	0	0	0	0	0	0	0
West Virginia	2024	19	4	0	0	0	22	1
	2025	1	0	0	0	0	1	0
	2026	0	25	0	0	0	0	25

State	Year	Outlets at Start of Year	Outlets Opened[2]	Termina -tions[2]	Non – Renewals[2]	Reacquired by Franchisor	Ceased Operations / Other Reasons[2]	Outlets at End of Year[2]
Wyoming	2024	12	5	0	0	0	5	12
	2025	12	0	0	0	0	12	0
	2026	0	0	0	0	0	0	0
TOTALS:	**2024**	**4,069**	**350**	**179**	**27**	**53**	**2,303**	**1,857**
	2025	**1,857**	**18**	**22**	**14**	**15**	**1390**	**434**
	2026	**434**	**505**	**31**	**1**	**0**	**135**	**772**

1. Our fiscal year end is March 31.

2. For some entries in the above chart, after a franchisee stopped operating a location due to termination, nonrenewal or other reason, and without AFC taking over operation, another franchisee was granted a franchise for the location. The location may have operated continuously, without interruption, or only a brief closure. In the table, these are counted as "Outlets Opened." See Exhibit M for more detailed information on the number of new outlets (outlets not previously in existence) opened in our last fiscal year.

3. We rebranded many of our AFC Counters to "Zenshi" in fiscal year ending March 31, 2024. As a result, the number of AFC outlets that ceased operations in the above table increased exponentially as of March 31, 2024. While many outlets ceased operating as AFC Counters, the majority are continuing to operate as Zenshi Counters. As of March 31, 2026, (i) 79 of the 135 outlets operating as AFC Counters listed in the above table ceased operations; (ii) 7 of the 135 outlets operating as AFC Counters listed in the above table rebranded to Wild Blue Counters; and (iii) 49 of the 135 outlets operating as AFC Counters listed in the above table rebranded to Zenshi Counters. As of March 31, 2025, (i) 56 of the 1,390 outlets operating as AFC Counters listed in the above table ceased operations; (ii) none of the 1,390 outlets operating as AFC Counters listed in the above table rebranded to Wild Blue Counters; and (iii) 1,334 of the 1,390 outlets operating as AFC Counters listed in the above table rebranded to Zenshi Counters. As of March 31, 2024, (i) 65 of the 2,303 outlets operating as AFC Counters listed in the above table ceased operations; (ii)12 of the 2,303 outlets operating as AFC Counters listed in the above table rebranded to Wild Blue Counters; and (iii) 2,226 of the 2,303 outlets operating as AFC Counters listed in the above table rebranded to Zenshi Counters.

Table No. 4
Status of Company-Owned Outlets
AFC Food Service Counters
For the years ended March 31, 2024, 2025, and 2026

State	Year	Outlets at Start of Year	Outlets Opened[1]	Outlets Reacquired From Franchisees	Outlets Closed[2]	Outlets Sold To Franchisee	Outlets at End of the Year
Alabama	2024	6	1	3	0	8	2
	2025	2	1	3	1	1	4
	2026	4	0	0	4	0	0
Alaska	2024	1	0	0	0	1	0
	2025	0	1	0	0	0	1
	2026	1	0	0	0	0	1
Arizona	2024	12	1	5	0	5	13
	2025	13	0	3	5	1	10
	2026	10	2	0	8	1	3

State	Year	Outlets at Start of Year	Outlets Opened[1]	Outlets Reacquired From Franchisees	Outlets Closed[2]	Outlets Sold To Franchisee	Outlets at End of the Year
Arkansas	2024	0	0	0	0	0	0
	2025	0	0	0	0	0	0
	2026	0	0	0	0	0	0
California	2024	36	8	5	9	22	18
	2025	18	1	2	9	4	8
	2026	8	17	0	2	2	21
Colorado	2024	2	1	2	0	3	2
	2025	2	0	0	2	0	0
	2026	0	0	0	0	0	0
Connecticut	2024	2	1	2	0	3	2
	2025	2	0	0	2	0	0
	2026	0	0	0	0	0	0
District Of Columbia (Wash, D.C.)	2024	4	0	0	1	2	1
	2025	1	1	0	0	0	2
	2026	2	0	0	2	0	0
Florida	2024	1	0	0	0	1	0
	2025	0	0	1	0	0	1
	2026	1	0	0	1	0	0
Georgia	2024	1	0	0	0	1	0
	2025	0	0	1	0	0	1
	2026	1	0	0	1	0	0
Idaho	2024	5	3	1	0	6	3
	2025	3	0	0	3	0	0
	2026	0	1	0	0	0	1
Illinois	2024	23	0	2	0	18	7
	2025	7	2	0	7	0	2
	2026	2	4	0	2	0	4
Indiana	2024	0	0	0	0	0	0
	2025	0	0	0	0	0	0
	2026	0	0	0	0	0	0
Kansas	2024	2	0	0	0	1	1
	2025	1	0	0	1	0	0
	2026	0	2	0	0	0	2
Kentucky	2024	0	0	0	0	0	0
	2025	0	1	1	1	0	1
	2026	1	3	0	0	0	4
Louisiana	2024	3	0	4	0	3	4
	2025	4	0	0	4	0	0
	2026	0	0	0	0	0	0
Maine	2024	2	0	0	0	0	2
	2025	2	0	0	2	0	0
	2026	0	0	0	0	0	0
Maryland	2024	0	1	2	0	2	1
	2025	1	0	0	0	1	0
	2026	0	0	0	0	0	0

State	Year	Outlets at Start of Year	Outlets Opened[1]	Outlets Reacquired From Franchisees	Outlets Closed[2]	Outlets Sold To Franchisee	Outlets at End of the Year
Massachusetts	2024	15	0	0	1	10	4
	2025	4	0	0	4	0	0
	2026	0	0	0	0	0	0
Minnesota	2024	4	1	1	1	2	3
	2025	3	0	0	1	1	1
	2026	1	0	0	1	0	0
Missouri	2024	0	2	0	0	0	2
	2025	2	0	0	1	1	0
	2026	0	2	0	0	0	2
Mississippi	2024	2	0	0	0	1	1
	2025	1	0	1	1	1	0
	2026	0	0	0	0	0	0
Montana	2024	2	0	2	0	4	0
	2025	0	0	0	0	0	0
	2026	0	0	0	0	0	0
Nevada	2024	0	0	0	0	0	0
	2025	0	0	0	0	0	0
	2026	0	0	0	0	0	0
New Hampshire	2024	7	0	0	1	0	6
	2025	6	0	0	6	0	0
	2026	0	0	0	0	0	0
New Jersey	2024	0	0	0	0	0	0
	2025	0	0	0	0	0	0
	2026	0	0	0	0	0	0
New Mexico	2024	0	2	0	0	2	0
	2025	0	0	0	0	0	0
	2026	0	0	0	0	0	0
New York	2024	14	11	2	0	11	16
	2025	16	2	0	11	1	6
	2026	6	0	0	4	0	2
North Carolina	2024	2	0	1	0	2	1
	2025	1	0	0	1	0	0
	2026	0	0	0	0	0	0
North Dakota	2024	0	0	1	0	0	1
	2025	1	0	0	1	0	0
	2026	0	0	0	0	0	0
Ohio	2024	2	0	0	2	0	0
	2025	0	1	0	0	0	1
	2026	1	0	0	1	0	0
Oregon	2024	8	1	3	0	8	4
	2025	4	0	0	4	0	0
	2026	0	1	0	0	1	0
Pennsylvania	2024	2	1	1	0	0	4
	2025	4	0	1	0	0	5
	2026	5	0	0	5	0	0

State	Year	Outlets at Start of Year	Outlets Opened[1]	Outlets Reacquired From Franchisees	Outlets Closed[2]	Outlets Sold To Franchisee	Outlets at End of the Year
Rhode Island	2024	2	0	0	0	1	1
	2025	1	0	0	1	0	0
	2026	0	0	0	0	0	0
South Carolina	2024	2	0	0	0	2	0
	2025	0	0	0	0	0	0
	2026	0	0	0	0	0	0
Tennessee	2024	4	1	0	0	3	2
	2025	2	0	2	1	0	3
	2026	3	0	0	3	0	0
Texas	2024	3	14	3	0	3	17
	2025	17	1	0	15	0	3
	2026	3	3	0	6	0	0
Utah	2024	1	0	0	1	0	0
	2025	0	0	0	0	0	0
	2026	0	0	0	0	0	0
Virginia	2024	2	3	4	0	9	0
	2025	0	0	0	0	0	0
	2026	0	0	0	0	0	0
Vermont	2024	1	1	0	0	0	2
	2025	2	1	0	0	2	1
	2026	1	1	0	1	0	1
Washington	2024	28	7	9	1	23	20
	2025	20	0	0	19	0	1
	2026	1	3	0	2	0	2
West Virginia	2024	4	0	0	0	4	0
	2025	0	0	0	0	0	0
	2026	0	0	0	0	0	0
Wyoming	2024	0	0	0	0	0	0
	2025	0	0	0	0	0	0
	2026	0	0	0	0	0	0
TOTALS	**2024**	**205**	**60**	**53**	**17**	**161**	**140**
	2025	**140**	**12**	**15**	**103**	**13**	**51**
	2026	**51**	**39**	**0**	**43**	**4**	**43**

Table No. 5
AFC Food Service Counters
Projected Openings as of March 31, 2026

State	Franchise Agreements Signed But Outlet Not Opened	Projected New Franchised Outlet in the Next Fiscal Year	Projected New Company-Owned Outlets in the Next Fiscal Year
California	0	1	0
Texas	0	0	1
TOTALS	0	1	1

Table No. 1
Systemwide Outlet Summary
Wild Blue Counters
for the years ended March 31, 2024, 2025, and 2026

Outlet Type	Year	Outlets at the Start of the Year	Outlets and the End of the Year	Net Change
Franchised	2024	66	126	+60
	2025	126	122	-4
	2026	122	81	-41
Company Owned	2024	9	41	+32
	2025	41	57	16
	2026	57	1	-56
Total Outlets	**2024**	**75**	**167**	**+92**
	2025	**167**	**179**	**12**
	2026	**179**	**82**	**-97**

Table No. 2
Transfers of Outlets from Franchisees to New Owners (other than the franchisor)
Wild Blue Counters
For the years ended March 31, 2024, 2025 and 2026

State	Year	Number of Transfers
California	2024	3
	2025	2
	2026	0
Florida	2024	0
	2025	0
	2026	0
Georgia	2024	0
	2025	1
	2026	0
Indiana	2024	0
	2025	0
	2026	1
Iowa	2024	0
	2025	1
	2026	0
Massachusetts	2024	0
	2025	1
	2026	0
Minnesota	2024	0
	2025	0
	2026	2
Missouri	2024	0
	2025	0
	2026	1

State	Year	Number of Transfers
New York	2024	1
	2025	0
	2026	1
North Carolina	2024	1
	2025	3
	2026	0
Ohio	2024	0
	2025	1
	2026	0
Vermont	2024	0
	2025	1
	2026	0
Pennsylvania	2024	0
	2025	0
	2026	1
Virginia	2024	0
	2025	0
	2026	0
Texas	2024	3
	2025	0
	2026	0
Utah	2024	1
	2025	0
	2026	0
TOTALS:	**2024**	**9**
	2025	**10**
	2026	**6**

Table No. 3
Status of Franchised Outlets
Wild Blue Counters
For years ended March 31, 2024, 2025 and 2026 [1]

State	Year	Outlets at Start of Year	Outlets Opened	Termina -tions	Non – Renewals	Reacquired by Franchisor	Ceased Operations / Other Reasons	Outlets at End of Year
Alabama	2024	1	0	0	0	0	0	1
	2025	1	0	0	0	0	0	1
	2026	1	0	0	0	0	1	0
Arizona	2024	3	2	0	0	0	0	5
	2025	5	0	0	0	0	0	5
	2026	5	0	0	0	0	0	5
California	2024	17	13	2	0	2	0	26
	2025	26	8	0	0	0	0	34
	2026	34	0	0	0	0	21	13
Colorado	2024	0	1	0	0	0	0	1
	2025	1	0	0	0	0	0	1
	2026	1	0	0	0	0	0	1

State	Year	Outlets at Start of Year	Outlets Opened	Termina -tions	Non – Renewals	Reacquired by Franchisor	Ceased Operations / Other Reasons	Outlets at End of Year
Connecticut	2024	0	1	0	0	0	0	1
	2025	1	1	0	0	0	1	1
	2026	1	0	0	0	0	0	1
District Of Columbia (Wash, D.C.)	2024	1	2	1	0	1	0	1
	2025	1	0	0	0	0	0	1
	2026	1	0	0	0	0	0	1
Florida	2024	2	3	0	0	0	0	5
	2025	5	0	0	0	0	2	3
	2026	3	2	0	0	0	2	3
Georgia	2024	0	1	0	0	0	0	1
	2025	1	0	0	0	0	0	1
	2026	1	0	0	0	0	0	1
Idaho	2024	0	0	0	0	0	0	0
	2025	0	0	0	0	0	0	0
	2026	0	1	0	0	0	0	1
Illinois	2024	4	4	1	0	1	0	6
	2025	6	2	1	0	1	0	6
	2026	6	0	0	0	0	5	1
Indiana	2024	1	1	0	0	0	1	1
	2025	1	0	0	0	0	0	1
	2026	1	0	0	0	0	0	1
Kentucky	2024	1	0	0	0	0	0	1
	2025	1	0	0	0	0	1	0
	2026	0	0	0	0	0	0	0
Louisiana	2024	0	3	0	0	0	0	3
	2025	3	0	0	0	0	0	3
	2026	3	0	0	0	0	1	2
Maryland	2024	3	2	2	0	1	1	1
	2025	1	1	1	0	1	0	0
	2026	0	0	0	0	0	0	0
Massachusetts	2024	3	7	0	0	0	0	10
	2025	10	1	0	0	0	4	7
	2026	7	0	0	0	0	0	7
Michigan	2024	1	1	0	0	0	0	2
	2025	2	2	0	1	0	1	2
	2026	2	0	0	0	0	0	2
Minnesota	2024	2	0	0	0	0	0	2
	2025	2	1	0	0	0	1	2
	2026	2	0	0	0	0	0	2
Missouri	2024	1	1	0	0	0	0	2
	2025	2	0	0	0	0	0	2
	2026	2	1	0	0	0	1	2
New Hampshire	2024	0	0	0	0	0	0	0
	2025	0	0	0	0	0	0	0
	2026	0	0	0	0	0	0	0

State	Year	Outlets at Start of Year	Outlets Opened	Termina -tions	Non – Renewals	Reacquired by Franchisor	Ceased Operations / Other Reasons	Outlets at End of Year
New Jersey	2024	1	2	0	0	0	0	3
	2025	3	0	0	0	1	1	1
	2026	1	0	0	0	0	0	1
New Mexico	2024	0	1	0	0	0	0	1
	2025	1	1	1	0	1	0	0
	2026	0	1	0	0	0	0	1
New York	2024	3	5	1	0	1	0	6
	2025	6	1	0	1	0	0	6
	2026	6	0	0	0	0	1	5
North Carolina	2024	3	5	0	0	0	1	7
	2025	7	0	0	0	0	0	7
	2026	7	1	0	0	0	1	7
Ohio	2024	0	4	0	0	0	0	4
	2025	4	0	0	0	0	0	4
	2026	4	0	0	0	0	3	1
Oklahoma	2024	0	1	0	0	0	0	1
	2025	1	0	0	0	0	0	1
	2026	1	0	0	0	0	0	1
Oregon	2024	2	0	0	0	0	1	1
	2025	1	1	1	0	1	0	0
	2026	0	0	0	0	0	0	0
Pennsylvania	2024	6	8	0	0	0	2	12
	2025	12	2	1	0	1	1	11
	2026	11	4	5	0	0	5	4
Rhode Island	2024	0	1	0	0	0	0	1
	2025	1	0	0	0	0	0	1
	2026	1	0	0	0	0	0	1
South Carolina	2024	0	0	0	0	0	0	0
	2025	0	0	0	0	0	0	0
	2026	0	0	0	0	0	0	0
Tennessee	2024	0	1	0	0	0	0	1
	2025	1	0	0	0	0	0	1
	2026	1	0	0	0	0	0	1
Texas	2024	4	5	0	0	0	0	9
	2025	9	1	0	0	0	1	9
	2026	9	0	0	0	0	1	8
Utah	2024	0	2	0	0	0	0	2
	2025	2	0	0	0	0	0	2
	2026	2	0	0	0	0	0	2
Vermont	2024	0	1	0	0	0	0	1
	2025	1	0	0	0	0	0	1
	2026	1	0	0	0	0	0	1
Virginia	2024	5	2	0	0	2	0	5
	2025	5	3	2	0	2	0	4
	2026	4	0	0	0	0	2	2

State	Year	Outlets at Start of Year	Outlets Opened	Termina -tions	Non – Renewals	Reacquired by Franchisor	Ceased Operations / Other Reasons	Outlets at End of Year
Washington	2024	2	2	0	1	1	0	2
	2025	2	0	0	0	0	0	2
	2026	2	0	0	0	0	1	1
Wisconsin	2024	0	1	0	0	0	0	1
	2025	1	1	0	0	0	0	2
	2026	2	0	0	0	0	0	2
TOTALS:	**2024**	**66**	**83**	**7**	**1**	**9**	**6**	**126**
	2025	**126**	**26**	**7**	**2**	**8**	**13**	**122**
	2026	**122**	**10**	**5**	**0**	**0**	**46**	**81**

1. Our fiscal year end is March 31.
2. For some entries in the above chart, after a franchisee stopped operating a location due to termination, nonrenewal or other reason, and without AFC taking over operation, another franchisee was granted a franchise for the location. The location may have operated continuously, without interruption, or only a brief closure. In the table, these are counted as "Outlets Opened." See Exhibit M for more detailed information on the number of new outlets (outlets not previously in existence) opened in our last fiscal year.

Table No. 4
Status of Company-Owned Outlets
Wild Blue Counters
For the years ended March 31, 2024, 2025 and 2026

State	Year	Outlets at Start of Year	Outlets Opened	Outlets Reacquired From Franchisees	Outlets Closed	Outlets Sold To Franchisee	Outlets at End of the Year
Alaska	2024	1	0	0	0	0	1
	2025	1	0	0	1	0	0
	2026	0	0	0	0	0	0
California	2024	1	5	2	0	0	8
	2025	8	2	0	0	1	9
	2026	9	3	0	12	0	0
Colorado	2024	0	0	0	0	0	0
	2025	0	1	0	0	0	1
	2026	1	0	0	1	0	0
Connecticut	2024	0	0	0	0	0	0
	2025	0	0	0	0	0	0
	2026	0	1	0	0	0	1
District of Columbia (Wash, D.C.)	2024	0	0	1	0	0	1
	2025	1	0	0	1	0	0
	2026	0	0	0	0	0	0
Idaho	2024	0	0	0	0	0	0
	2025	0	0	0	0	0	0
	2026	0	1	0	1	0	0

State	Year	Outlets at Start of Year	Outlets Opened	Outlets Reacquired From Franchisees	Outlets Closed	Outlets Sold To Franchisee	Outlets at End of the Year
Illinois	2024	1	7	1	0	0	9
	2025	9	2	1	1	0	11
	2026	11	0	0	11	0	0
Louisiana	2024	1	0	0	0	1	0
	2025	0	0	0	0	0	0
	2026	0	0	0	0	0	0
Massachusetts	2024	0	0	0	0	0	0
	2025	0	0	0	0	0	0
	2026	0	0	0	0	0	0
Maryland	2024	0	0	1	0	0	1
	2025	1	3	1	0	0	5
	2026	5	0	0	5	0	0
Michigan	2024	0	1	0	0	0	1
	2025	1	1	0	0	1	1
	2026	1	0	0	1	0	0
Missouri	2024	0	0	0	0	0	0
	2025	0	1	0	0	0	1
	2026	1	0	0	1	0	0
New Jersey	2024	1	0	0	0	0	1
	2025	1	3	1	0	0	5
	2026	5	0	0	5	0	0
New Mexico	2024	0	0	0	0	0	0
	2025	0	0	1	0	0	1
	2026	1	0	0	1	0	0
New York	2024	2	0	1	0	0	3
	2025	3	3	0	1	1	4
	2026	4	0	0	4	0	0
Oregon	2024	0	0	0	0	0	0
	2025	0	0	1	1	0	0
	2026	0	0	0	0	0	0
Pennsylvania	2024	1	1	0	0	0	2
	2025	2	1	1	0	0	4
	2026	4	0	0	4	0	0
Virginia	2024	1	0	2	0	0	3
	2025	3	0	2	2	0	3
	2026	3	1	0	4	0	0
Washington	2024	0	10	1	0	0	11
	2025	11	2	0	1	0	12
	2026	12	0	0	12	0	0
Wisconsin	2024	0	0	0	0	0	0
	2025	0	0	0	0	0	0
	2026	0	0	0	0	0	0
TOTALS	**2024**	**9**	**24**	**9**	**0**	**1**	**41**
	2025	**41**	**19**	**8**	**8**	**3**	**57**
	2026	**57**	**6**	**0**	**62**	**0**	**1**

Table No. 5
Wild Blue Counters
Projected Openings as of March 31, 2026

State	Franchise Agreements Signed But Outlet Not Opened	Projected New Franchised Outlet in the Next Fiscal Year	Projected New Company-Owned Outlets in the Next Fiscal Year
Texas	0	1	0
TOTALS	0	1	0

Attached to this Disclosure Document as Exhibit M is a list of the names, addresses and phone numbers of all our existing U.S. franchisees as of March 31, 2026. Also enclosed as Exhibit M is a list of U.S. franchisees terminated, cancelled or not renewed or who otherwise voluntarily or involuntarily ceased to do business in the year ending March 31, 2026 or who have not communicated with us in the 10 weeks preceding the issuance date. If you buy this franchise, your contact information may be disclosed to other buyers when you leave the franchise system.

During the last three fiscal years, we have signed one confidentiality agreement with the estate of a former franchisee. In some instances, current, and former franchisees sign provisions restricting their ability to speak openly about their experience with us. You may wish to speak with current and former franchisees, but be aware that not all such franchisees will be able to communicate with you.

There are no trademark-specific franchisee organizations associated with the franchise system being offered which we have created, sponsored or endorsed. There are no independent franchisee organizations that have asked to be included in this disclosure document.

ITEM 21 FINANCIAL STATEMENTS

Attached to this Disclosure Document as Exhibit A are our unaudited interim financial statements for the period April 1, 2026, through June 30, 2026 and our audited financial statements for fiscal years ending March 31, 2026, March 31, 2025 and March 31, 2024. Our fiscal year end is March 31st.

ITEM 22 CONTRACTS

Attached as Exhibits B, C, D, E, F, G, H, I, J, K and P is our Franchise Application, Franchise Agreement, Full-Time Location Franchise Addendum, Part-Time Location Addendum, Self-Service Location Addendum, General Release, Assignment of Franchise Agreement and Franchisor Consent, Asset Sale and Purchase Agreement, Food Service Counter Transfer Agreement, Promissory Note and Confidentiality Agreement. Attached as Exhibit O are the State Specific Addenda which you may need to sign.

ITEM 23 RECEIPTS

The Receipts to this Disclosure Document are attached as the last pages under Exhibit R, as separate and detachable pages (one to be signed by you and returned to us and the other to be kept by you).

EXHIBIT A

FINANCIAL STATEMENTS

ADVANCED FRESH CONCEPTS FRANCHISE CORP.
UNAUDITED INTERIM FINANCIAL STATEMENTS
FOR THE PERIOD APRIL 1, 2026 THROUGH JUNE 30, 2026

THESE FINANCIAL STATEMENTS FOR THE PERIOD APRIL 1, 2026 THROUGH JUNE 30, 2026 ARE PREPARED WITHOUT AN AUDIT. PROSPECTIVE FRANCHISEES OR SELLERS OF FRANCHISES SHOULD BE ADVISED THAT NO CERTIFIED PUBLIC ACCOUNTANT HAS AUDITED THESE FIGURES OR EXPRESSED HIS/HER OPINION WITH REGARD TO THE CONTENT OR FORM.

Advanced Fresh Concepts Franchise Corp.

Financial Statements

June 30, 2026

Internally Prepared

Advanced Fresh Concepts Franchise Corp.
Balance Sheet
June 30, 2026

Assets	
Current assets	
Cash and cash equivalents	$ 6,927,046
Accounts receivable, net of allowance for credit losses of $55,047	63,322,740
Due from related parties	52,755,836
Inventory	1,157,020
Prepaid expenses and other assets	1,476,611
Loans receivable - franchisees	740,106
Prepaid income taxes	1,729,500
Total current assets	128,108,859
Equipment, net	3,802,044
Software, net	633,288
Operating lease right-of-use assets	51,928
Deposits and other asset	23,813
Deferred taxes	3,928,632
Total assets	**$ 136,548,564**
Liabilities and Stockholder's Equity	
Current liabilities	
Accounts payable	$ 40,603,941
Due to related parties	21,260,691
Accrued expenses and other liabilities	4,010,297
Income taxes payable	4,188,608
Operating lease liabilities, current portion	38,207
Current portion of deferred revenue	4,063,556
Total current liabilities	74,165,300
Operating lease liabilities, noncurrent portion	13,722
Deferred revenues, net of current portion	8,129,927
Total liabilities	82,308,949
Stockholder's equity	
Common stock, no par value, authorized 100,000 shares, issued and outstanding 5,000 shares	500,000
Retained earnings	54,645,886
Accumulated other comprehensive loss	(906,271)
Total stockholder's equity	54,239,615
Total liabilities and stockholder's equity	**$ 136,548,564**

Advanced Fresh Concepts Franchise Corp.
Statement of Comprehensive Income
For the period June 30, 2026

Revenues	
Franchise revenue	$ 109,793,262
Retail revenue	7,426,634
Product revenue	2,209,163
Total revenues	119,429,059
Costs and expenses	
Direct contract costs	11,375,650
Operating expenses	105,680,429
Total costs and expenses	117,056,079
Income from operations	2,372,980
Other income	
Other income	2,885,553
Interest income	449,016
Net other income	3,334,569
Income before provision for income taxes	5,707,549
Provision for income taxes	1,386,934
Net income	4,320,615
Other comprehensive income	
Foreign currency translation adjustment	(118,315)
Total comprehensive income	**$ 4,202,300**

Advanced Fresh Concepts Franchise Corp.
Statement of Changes in Stockholder's Equity
For the period June 30, 2026

	Common Stock				
	Shares	Amount	Retained Earnings	Accumulated Other Comprehensive Income (Loss)	Total
Balance at March 31, 2026	5,000	$ 500,000	$ 50,325,271	$ (787,956)	$ 50,037,315
Net income	-	-	4,320,615	-	4,320,615
Other comprehensive income	-	-	-	(118,315)	(118,315)
Dividend paid	-	-	-	-	-
Balance at June 30, 2026	**5,000**	**500,000**	**54,645,886**	**(906,271)**	**54,239,615**

AUDITED FINANCIAL STATEMENTS FOR THE YEARS ENDED MARCH 31, 2026, MARCH 31, 2025, AND MARCH 31, 2024

ADVANCED FRESH CONCEPTS FRANCHISE CORP.

FINANCIAL REPORT

MARCH 31, 2026

ADVANCED FRESH CONCEPTS FRANCHISE CORP.

CONTENTS

	Page
INDEPENDENT AUDITOR'S REPORT	1 – 2
FINANCIAL STATEMENTS	
Balance Sheets	3 – 4
Statements of Comprehensive Income	5
Statements of Changes in Stockholder's Equity	6
Statements of Cash Flows	7 – 8
Notes to Financial Statements	9 – 24

SingerLewak
Accountants & Consultants

INDEPENDENT AUDITOR'S REPORT

Board of Directors
Advanced Fresh Concepts Franchise Corp.

Opinion

We have audited the financial statements of Advanced Fresh Concepts Franchise Corp. (the "Company"), which comprise the balance sheets as of March 31, 2026 and 2025, the related statements of comprehensive income, changes in stockholder's equity, and cash flows for each of the three years in the period ended March 31, 2026, and the related notes to the financial statements.

In our opinion, the accompanying financial statements present fairly, in all material respects, the financial position of the Company as of March 31, 2026 and 2025, and the results of its operations and its cash flows for each of the three years in the period ended March 31, 2026 in accordance with accounting principles generally accepted in the United States of America.

Basis for Opinion

We conducted our audits in accordance with auditing standards generally accepted in the United States of America (GAAS). Our responsibilities under those standards are further described in the Auditor's Responsibilities for the Audit of the Financial Statements section of our report. We are required to be independent of the Company and to meet our other ethical responsibilities, in accordance with the relevant ethical requirements relating to our audits. We believe that the audit evidence we have obtained is sufficient and appropriate to provide a basis for our audit opinion.

Emphasis of Matter

As disclosed in Notes 2, 5, and 8 to the financial statements, the Company and the results of its operations are dependent on transactions with the parent company and affiliates. Accordingly, the accompanying financial statements may not be indicative of the financial position or results of operations that would have occurred had the Company operated without such affiliation. Our opinion is not modified with respect to this matter.

Responsibilities of Management for the Financial Statements

Management is responsible for the preparation and fair presentation of the financial statements in accordance with accounting principles generally accepted in the United States of America, and for the design, implementation, and maintenance of internal control relevant to the preparation and fair presentation of financial statements that are free from material misstatement, whether due to fraud or error.

In preparing the financial statements, management is required to evaluate whether there are conditions or events, considered in the aggregate, that raise substantial doubt about the Company's ability to continue as a going concern within one year after the date that the financial statements are issued or available to be issued.

Auditor's Responsibilities for the Audit of the Financial Statements

Our objectives are to obtain reasonable assurance about whether the financial statements as a whole are free from material misstatement, whether due to fraud or error, and to issue an auditor's report that includes our opinion. Reasonable assurance is a high level of assurance but is not absolute assurance and therefore is not a guarantee that an audit conducted in accordance with GAAS will always detect a material misstatement when it exists. The risk of not detecting a material misstatement resulting from fraud is higher than for one resulting from error, as fraud may involve collusion, forgery, intentional omissions, misrepresentations, or the override of internal control. Misstatements are considered material if there is a substantial likelihood that, individually or in the aggregate, they would influence the judgment made by a reasonable user based on the financial statements.

In performing an audit in accordance with GAAS, we:

- Exercise professional judgment and maintain professional skepticism throughout the audit.

- Identify and assess the risks of material misstatement of the financial statements, whether due to fraud or error, and design and perform audit procedures responsive to those risks. Such procedures include examining, on a test basis, evidence regarding the amounts and disclosures in the financial statements.

- Obtain an understanding of internal control relevant to the audit in order to design audit procedures that are appropriate in the circumstances, but not for the purpose of expressing an opinion on the effectiveness of the Company's internal control. Accordingly, no such opinion is expressed.

- Evaluate the appropriateness of accounting policies used and the reasonableness of significant accounting estimates made by management, as well as evaluate the overall presentation of the financial statements.

- Conclude whether, in our judgment, there are conditions or events, considered in the aggregate, that raise substantial doubt about the Company's ability to continue as a going concern for a reasonable period of time.

We are required to communicate with those charged with governance regarding, among other matters, the planned scope and timing of the audit, significant audit findings, and certain internal control-related matters that we identified during the audit.

Singer Lewak LLP

July 31, 2026

ADVANCED FRESH CONCEPTS FRANCHISE CORP.

BALANCE SHEETS

March 31, 2026 and 2025

ASSETS

	2026	2025
Current assets		
Cash and cash equivalents	$ 18,951,290	$ 20,077,954
Accounts receivable, net of allowance for credit losses of $55,047 and $437,870, respectively	64,535,985	77,796,423
Due from related parties	30,894,407	9,161,337
Inventory	1,717,066	2,401,630
Prepaid expenses and other assets	1,966,573	1,362,314
Loans receivable – franchisees	640,376	481,923
Prepaid income taxes	1,913,934	1,588,626
Total current assets	120,619,631	112,870,207
Equipment, net	4,550,600	4,427,185
Operating lease right-of-use assets	61,224	92,813
Deposits	47,078	70,291
Deferred taxes	3,928,632	4,521,279
Total assets	**$ 129,207,165**	**$ 121,981,775**

(Continued)

See notes to financial statements.

ADVANCED FRESH CONCEPTS FRANCHISE CORP.

BALANCE SHEETS

March 31, 2026 and 2025

LIABILITIES AND STOCKHOLDER'S EQUITY

	2026	2025
Current liabilities		
Accounts payable	$ 48,740,091	$ 45,283,375
Due to related party	10,114,390	8,962,550
Accrued expenses and other liabilities	5,226,911	5,106,455
Income taxes payable	2,986,016	2,738,133
Operating lease liabilities, current portion	37,796	45,464
Current portion of deferred revenue	4,025,024	4,159,193
Total current liabilities	71,130,228	66,295,170
Operating lease liabilities, noncurrent portion	23,428	47,349
Deferred revenue, net of current portion	8,016,194	8,679,118
Total liabilities	79,169,850	75,021,637
Stockholder's equity		
Common stock, no par value, authorized 100,000 shares, issued and outstanding 5,000 shares	500,000	500,000
Retained earnings	50,325,271	47,395,476
Accumulated other comprehensive loss	(787,956)	(935,338)
Total stockholder's equity	50,037,315	46,960,138
Total liabilities and stockholder's equity	**$ 129,207,165**	**$ 121,981,775**

(Concluded)

See notes to financial statements.

ADVANCED FRESH CONCEPTS FRANCHISE CORP.

STATEMENTS OF COMPREHENSIVE INCOME

Years Ended March 31, 2026, 2025 and 2024

	2026	2025	2024
Revenues			
Franchise revenue	$ 417,339,820	$ 408,637,052	$ 410,865,584
Product revenue	7,193,442	250,728,389	240,193,646
Retail revenue	38,272,723	35,442,056	26,501,503
Total revenues	462,805,985	694,807,497	677,560,733
Costs and expenses			
Direct contract costs	54,418,067	289,061,603	268,853,694
Operating expenses	404,045,916	392,275,196	391,706,701
Total costs and expenses	458,463,983	681,336,799	660,560,395
Income from operations	4,342,002	13,470,698	17,000,338
Other income (expense)			
Other income	11,523,207	-	-
Interest income	1,499,895	1,141,054	1,249,392
Interest expense	-	-	(3,561)
Net other income	13,023,102	1,141,054	1,245,831
Income before provision for income taxes	17,365,104	14,611,752	18,246,169
Provision for income taxes	4,435,309	3,641,948	4,550,885
Net income	12,929,795	10,969,804	13,695,284
Other comprehensive income (loss)			
Foreign currency translation adjustment	147,382	(299,584)	(5,950)
Total comprehensive income	**$ 13,077,177**	**$ 10,670,220**	**$ 13,689,334**

See notes to financial statements.

ADVANCED FRESH CONCEPTS FRANCHISE CORP.

STATEMENTS OF CHANGES IN STOCKHOLDER'S EQUITY

Years Ended March 31, 2026, 2025 and 2024

	Common Stock		Retained	Accumulated Other Comprehensive	
	Shares	Amount	Earnings	Loss	Total
Balance at March 31, 2023	5,000	$ 500,000	$ 42,730,388	$ (629,804)	$ 42,600,584
Net income	-	-	13,695,284	-	13,695,284
Other comprehensive loss	-	-	-	(5,950)	(5,950)
Dividend paid	-	-	(5,000,000)	-	(5,000,000)
Balance at March 31, 2024	5,000	500,000	51,425,672	(635,754)	51,289,918
Net income	-	-	10,969,804	-	10,969,804
Other comprehensive loss	-	-	-	(299,584)	(299,584)
Dividend paid	-	-	(15,000,000)	-	(15,000,000)
Balance at March 31, 2025	5,000	500,000	47,395,476	(935,338)	46,960,138
Net income	-	-	12,929,795	-	12,929,795
Other comprehensive income	-	-	-	147,382	147,382
Dividend paid	-	-	(10,000,000)	-	(10,000,000)
Balance at March 31, 2026	**5,000**	**$ 500,000**	**$ 50,325,271**	**$ (787,956)**	**$ 50,037,315**

See notes to financial statements.

ADVANCED FRESH CONCEPTS FRANCHISE CORP.

STATEMENTS OF CASH FLOWS

Years Ended March 31, 2026, 2025 and 2024

	2026	2025	2024
Cash flows from operating activities			
Net income	$ 12,929,795	$ 10,969,804	$ 13,695,284
Adjustments to reconcile net income to net cash provided by operating activities:			
Deferred taxes	538,895	(12,668)	(451,070)
Depreciation expense	1,139,749	935,405	830,411
Bad debt expense	(80,399)	610,422	437,481
Noncash lease expense	31,588	57,818	56,723
Gain on disposition of equipment	(43,704)	(112,718)	(169,932)
Changes in operating assets and liabilities:			
Accounts receivable	13,363,119	(4,945,860)	(11,813,102)
Due from related parties	(21,762,569)	29,742,761	309,943
Inventory	683,213	(823,476)	(32,206)
Prepaid expenses and other assets	(765,521)	149,662	(108,835)
Prepaid income taxes	(325,642)	(88,564)	84,166
Deposits and other asset	23,213	(2,088)	(953)
Accounts payable	3,434,553	1,162,306	3,032,703
Due to related party	1,158,402	(10,334,374)	716,320
Accrued expenses and other liabilities	123,370	650,855	363,939
Income taxes payable	247,883	(752,956)	28,982
Operating lease liabilities	(31,588)	(57,818)	(56,723)
Deferred revenue	(798,674)	444,068	1,158,890
Net cash provided by operating activities	9,865,683	27,592,579	8,082,021
Cash flows from investing activities			
Purchases of equipment and for construction in progress	(1,516,644)	(895,856)	(2,462,809)
Proceeds from sales of equipment	297,230	202,187	182,355
Net cash used in investing activities	(1,219,414)	(693,669)	(2,280,454)
Cash flows from financing activities			
Principal payments on finance lease	-	-	(1,746)
Dividends paid	(10,000,000)	(15,000,000)	(5,000,000)
Net cash used in financing activities	(10,000,000)	(15,000,000)	(5,001,746)
Effect of exchange rate changes on cash and cash equivalents	227,067	(415,450)	(4,130)
Net increase (decrease) in cash and cash equivalents	(1,126,664)	11,483,460	795,691
Cash and cash equivalents – beginning of year	20,077,954	8,594,494	7,798,803
Cash and cash equivalents – end of year	**$ 18,951,290**	**$ 20,077,954**	**$ 8,594,494**

(Continued)

See notes to financial statements.

ADVANCED FRESH CONCEPTS FRANCHISE CORP.

STATEMENTS OF CASH FLOWS

Years Ended March 31, 2026, 2025 and 2024

	2026	2025	2024
Supplemental disclosure of cash flow information:			
Cash paid for interest	$ -	$ -	$ 3,561
Cash paid for income taxes	$ 4,029,427	$ 4,938,168	$ 5,270,688

(Concluded)

See notes to financial statements.

NOTE 1 – ORGANIZATION AND SUMMARY OF SIGNIFICANT ACCOUNTING POLICIES

Organization

Advanced Fresh Concepts Franchise Corp. (the "Company") was incorporated on April 30, 2002 in California. The Company is a wholly owned subsidiary of Advanced Fresh Concepts Corp. (the "Parent Company"). The principal business of the Company is to authorize and manage franchises for the operation of food service counters, primarily offering sushi, within supermarkets and other locations (collectively, the "facility owners") pursuant to a certain system that was developed by the Parent Company. The food service counters began as outlets serving sushi and expanded into offering other Asian cuisine. While the Company primarily operates in the United States, beginning in September 2009, the Company initiated operations in Canada. In November 2018, the Parent Company was acquired by Zensho Holdings Co., Ltd. ("Zensho Holdings") to become the ultimate parent of the Company. In April 2019, Zensho Holdings transferred its ownership in the Parent Company to Zensho USA Corporation, a wholly owned subsidiary of Zensho Holdings.

Basis of Accounting

The accompanying financial statements have been prepared in accordance with accounting principles generally accepted in the United States of America (U.S. GAAP).

Use of Estimates

The preparation of financial statements in conformity with U.S. GAAP requires management to make estimates and assumptions that affect the reported amounts of assets and liabilities and disclosure of contingent assets and liabilities at the date of the financial statements and the reported amounts of revenues and expenses during the reporting period. Actual results may differ from those estimates.

Cash and Cash Equivalents

Cash and cash equivalents include all cash balances and highly liquid investments with purchased maturities of three months or less.

Accounts Receivable

Accounts receivable represents the Company's unconditional rights to considerations in exchange for goods and services transferred from franchise operations, sales of food and related products at the food service counter and product sales made to franchisees. Receivables are collectible from the facility owners and franchisees based on agreed payment terms. Amounts due from facility owners are dependent on the payment cycle which is generally on a weekly or monthly basis while payments on franchisee accounts are generally received on a monthly basis. Accounts receivable, net, had an opening balance at April 1, 2024 of $73,555,878.

The Company records accounts receivable at amortized cost less an allowance for credit losses. The Company measures its allowance for credit losses using an expected credit loss model utilizing a loss rate methodology which considers historical loss rates on its trade accounts receivable balances, adjusted for current economic and business conditions, and anticipated future economic events that may affect a customer's ability to pay.

NOTE 1 – ORGANIZATION AND SUMMARY OF SIGNIFICANT ACCOUNTING POLICIES (Continued)

Accounts Receivable (Continued)
Accounts receivable are written off when deemed uncollectible. Recoveries of accounts receivable previously written off are recorded when received.

Inventory
Inventory is stated at the lower of cost (first-in, first-out basis) or net realizable value.

Equipment
Equipment is stated at cost. Depreciation of equipment is calculated by using the straight-line method over the estimated useful lives of the respective assets, as follows:

Vehicles	5 to 6 years
Computer equipment	3 to 5 years
Furniture and fixtures	5 to 7 years
Building improvements	30 years

Impairment of Long-lived Assets
Impairment losses are recorded on long-lived assets when events or changes in circumstances indicate that the carrying amount of the asset may not be recoverable. When required, impairment losses on assets to be held and used are recognized based on the excess of each asset's carrying amount over the estimated fair value of the asset.

Revenue Recognition
Revenue is measured based on a transaction price specified in a contract with a customer. The transaction price is the amount of consideration to which the Company expects to be entitled in exchange for transferring products and services to the customer. The Company excludes sales, use, and similar taxes from the measurement of the transaction price. The Company does not have significant variable consideration in its contracts.

The Company recognizes revenue when it satisfies a performance obligation by transferring control over a product or service to a customer either at a point in time or over time. Total approximate revenue recognized over time and at a point in time was as follows for the years ended March 31, 2026, 2025, and 2024:

	2026	2025	2024
Revenue recognized at a point in time	$ 456,487,591	$ 689,037,687	$ 672,532,519
Revenue recognized over time	6,318,394	5,769,810	5,028,214
Total	**$ 462,805,985**	**$ 694,807,497**	**$ 677,560,733**

NOTE 1 – ORGANIZATION AND SUMMARY OF SIGNIFICANT ACCOUNTING POLICIES (Continued)

Revenue Recognition (Continued)
The following is a description of the principal activities from which the Company generates its revenue, and the nature and timing of satisfaction of each performance obligation.

Franchise Revenue
The Company enters into a franchise agreement with franchisees and assesses the contract term as the period in which the parties to the contract have presently enforceable rights and obligations. The contract term is in line with the stated term in the contract at all times.

The specified promises that are licensed to the franchisee are the franchise rights, which include use of the name, trademarks, and proprietary methods. The franchisee is granted the right to operate at the facility pursuant to the Company's license agreements with the facility owners.

The Company also provides certain pre-opening services to franchisees such as training and orientation, systems implementation, and the design of a quality control program. These services are highly interrelated and not considered distinct from the franchise right.

Upfront payments related to franchise fees and pre-opening services are initially recorded in deferred revenue and revenue is recognized over the contract term. The Company believes that the impact of the financing component on upfront payment related to initial franchise fee is not significant at the contract level.

Related to the grant of a franchise right, the Company receives a sales-based royalty which is determined by the gross sales from franchised stores, less any commissions attributable to the franchisees. Revenue from sales-based royalties is recognized as the related sales occur at the franchised stores.

Revenue from services related to the franchise operations after the contract commencement such as laboratory, inspection, and web/data services, is recognized when the service is performed based on a stand-alone selling price.

Product Revenue
The Company sells food and supplies to franchisees through the online purchase order system that dictates the price, quantity of goods, payment terms, delivery terms, and other terms and conditions of the transaction.

Product revenue is recognized when food and supplies are shipped (for shipments from a related party's warehouse) or when products are delivered (for shipments from a third-party vendor) which indicates the transfer of control from the Company to the franchisee.

As a practical expedient, shipping and handling costs associated with outbound freight after control over a product has transferred to a customer are accounted for as a fulfillment cost and are included under direct contract costs in the statement of comprehensive income.

NOTE 1 – ORGANIZATION AND SUMMARY OF SIGNIFICANT ACCOUNTING POLICIES (Continued)

Revenue Recognition (Continued)
Product Revenue (Continued)
Effective April 1, 2025, the Company discontinued selling food and supplies to its franchisees in the US. Instead, AFC Distribution Corp. ("AFCDC"), a wholly owned subsidiary of the Parent Company, began selling these products directly to franchisees. Under this new process, the Company no longer records product revenue and related cost of goods sold for these items and instead earns referral fees and collection fees associated with AFCDC's direct sales.

Retail Revenue
The Company generates revenue from the sale of food and related products to end customers, at its company-managed stores.

Company-managed store revenue is recognized when the sale is consummated, and control is transferred at the food service counter.

Costs and Expenses
Direct costs of sales and servicing of contracts with customers are recorded as direct contract costs as they are incurred. Direct costs also include costs incurred for shipping and handling of food and related products to franchisees. Operating expenses such as selling, general and administrative costs are charged in the statement of comprehensive income when incurred.

Advertising Costs
Advertising costs included in operating expenses are expensed as incurred. Advertising expense amounted to $4,691,380, $4,746,188, and $3,736,836 for the years ended March 31, 2026, 2025 and 2024, respectively.

Leases
The Company determines if an arrangement is or contains a lease at inception, which is the date on which the terms of the contract are agreed to, and the agreement creates enforceable rights and obligations. A contract is or contains a lease when (i) explicitly or implicitly identified assets have been deployed in the contract and (ii) the Company obtains substantially all of the economic benefits from the use of that underlying asset and directs how and for what purpose the asset is used during the term of the contract. The Company also considers whether its service arrangements include the right to control the use of an asset.

The Company recognizes leases on its balance sheet as a right-of-use asset representing the right to use an underlying asset and a lease liability representing the obligation to make lease payments over the lease term, measured on a discounted basis. Leases are classified as either finance leases or operating leases based on certain criteria. Classification of the lease affects the pattern of expense recognition in the statement of comprehensive income.

NOTE 1 – ORGANIZATION AND SUMMARY OF SIGNIFICANT ACCOUNTING POLICIES (Continued)

Leases (Continued)
The Company made an accounting policy election available under Topic 842 not to recognize right-of-use assets and lease liabilities for leases with a term of 12 months or less. For all other leases, right-of-use assets and lease liabilities are measured based on the present value of future lease payments over the lease term at the commencement date of the lease. The right-of-use assets also include any initial direct costs incurred and lease payments made at or before the commencement date and are reduced by any lease incentives. To determine the present value of lease payments, the Company made an accounting policy election available to non-public companies to utilize a risk-free borrowing rate, which is aligned with the lease term at the lease commencement date.

The Company has made an accounting policy election to account for lease and non-lease components in their contracts as a single lease component for all asset classes.

Income Taxes
The Company is treated as a C corporation for federal and state income tax purposes. Income taxes are provided for the tax effects of transactions reported in the financial statements and consist of taxes currently due plus deferred taxes which relate to the temporary differences between financial and tax reporting.

The deferred tax assets and liabilities represent the future tax return consequences of those differences, which will either be taxable or deductible when the assets and liabilities are recovered and settled, respectively. Management records a valuation allowance to reduce its deferred taxes to the amount it believes is more likely than not to be realized. The amount of the deferred tax assets considered realizable, however, could be reduced in the near term if estimates of future income are reduced.

The Company recognizes the effect of income tax positions only if those positions are more likely than not of being sustained. The Company classifies interest and penalties related to unrecognized tax benefits, if incurred, as a component of income tax expense. To date, there have been no unrecognized tax positions.

Foreign Currency Transactions/Translation
The functional currency for the Company's Canadian operations is the applicable local currency which is the Canadian dollar. The translation of the applicable foreign currency into U.S. dollars is performed for balance sheet accounts using the current exchange rate in effect at the balance sheet date and for revenue and expense accounts using a weighted-average exchange rate during the period. The gains or losses, net of applicable income taxes, resulting from such translation are included as a component of stockholder's equity and classified as other comprehensive income or loss. Gains and losses resulting from foreign currency transactions are recorded in the statement of comprehensive income.

NOTE 1 – ORGANIZATION AND SUMMARY OF SIGNIFICANT ACCOUNTING POLICIES (Continued)

Recently Adopted Accounting Pronouncements

In March 2023, the FASB issued ASU 2023-01, *Leases (Topic 842): Common-Control Arrangements*, related to the accounting for leases between entities under common control. This ASU provides a practical expedient for private companies to consider only the written terms and conditions of a common-control arrangement for determination of whether a lease exists and the subsequent accounting for the lease. In addition, the ASU amends the accounting for leasehold improvements in common-control arrangements by requiring a lessee in a common-control lease arrangement to amortize leasehold improvements that it owns over the improvements' useful life to the common control group, regardless of the lease term, if the lessee continues to control the use of the underlying asset through a lease. The amendments in this ASU are effective for fiscal years beginning after December 15, 2023, including interim periods within those fiscal years. The Company adopted ASU 2023-01 on April 1, 2024. The adoption of this standard did not have a significant impact on the Company's financial statements.

Recent Accounting Pronouncements

In December 2023, the FASB issued ASU No. 2023-09, *Income Taxes (Topic 740): Improvements to Income Tax Disclosures*, which requires that an entity, on an annual basis, discloses additional income tax information, primarily related to the rate reconciliation and income taxes paid. The amendment in the ASU is intended to enhance the transparency and decision usefulness of income tax disclosures. The provisions of this standard are effective for annual periods beginning after December 15, 2025. The Company is currently evaluating the impact of this new guidance on its financial statements.

In July 2025, the FASB issued ASU 2025-05, *Financial Instruments - Credit Losses (Topic 326): Measurement of Credit Losses for Accounts Receivable and Contract Assets*. The ASU introduces a practical expedient and, for entities other than public business entities, an accounting policy election to simplify the application of Topic 326, *Financial Instruments—Credit Losses*, to current accounts receivable and current contract assets arising from revenue transactions accounted for under Topic 606, *Revenue from Contracts with Customers*. ASU 2025-05 is effective prospectively. This ASU is effective for annual reporting periods beginning after December 15, 2025. Early adoption is permitted in annual reporting periods in which financial statements have not yet been issued or made available for issuance. The Company is currently evaluating the impact of this new guidance on its consolidated financial statements.

Reclassifications

Certain prior-period amounts related to direct contract costs and operating expenses have been reclassified to conform to the current-period presentation. These reclassifications had no effect on previously reported net income, total assets, or stockholder's equity.

NOTE 2 – RELATED PARTY TRANSACTIONS

In recognition of certain benefits and services the Parent Company has provided the Company, the Company paid the Parent Company amounts totaling $17,365,104, $14,611,753, and $18,246,168 for the years ended March 31, 2026, 2025, and 2024, respectively. On August 1, 2025, the Company declared dividends of $2,000 per share of outstanding stock of 5,000 shares to the Parent Company; dividends paid amounted to $10,000,000. On July 1, 2024, the Company declared dividends of $3,000 per share of outstanding stock of 5,000 shares to the Parent Company; dividends paid amounted to $15,000,000. On June 29, 2023, the Company declared dividends of $1,000 per share of outstanding common stock of 5,000 shares to the Parent Company; dividends paid amounted to $5,000,000.

On July 1, 2016, the Company entered into an "Agreement for Franchise Operations" with Advanced Fresh Concepts Pty Ltd ("AFCPL"), a wholly owned Australian subsidiary of the Parent Company. Pursuant to the agreement, the Company granted AFCPL certain rights and privileges related to the franchising of food service counter operations in Australia and New Zealand. In recognition of the rights and privileges conveyed and administrative expenses not directly reimbursed, the Company will receive an annual service fee from AFCPL as stipulated in the agreement. The initial term is for five years, absent notification by either party, will renew for an additional five-year period. Service fee income related to this agreement amounted to $1,700,058, $2,012,829, and $2,376,942 for the years ended March 31, 2026, 2025, and 2024, respectively.

Effective July 1, 2016, the Company began purchasing substantially all of their products from AFCDC, a wholly owned subsidiary of the Parent Company. Prior to this, the Company had purchased most of their products from the Parent Company.

Effective April 1, 2025, AFCDC began selling food and supplies directly to franchisees, as detailed in Note 1. Under this new arrangement, the Company collects referral fees, collection fees, and other charges associated with AFCDC's direct sales. For the year ended March 31, 2026, these combined fees totaled $11,425,903 and are presented within the other income caption in the statement of comprehensive income.

NOTE 2 – RELATED PARTY TRANSACTIONS (Continued)

The following is a summary of significant transactions and balances with the Parent Company and affiliates as of and for the years ended March 31, 2026, 2025, and 2024:

	2026	2025	2024
Due from Parent Company (see Note 5)	$ 29,190,534	$ 7,148,508	$ 36,490,270
Due from affiliates	1,703,873	2,012,829	2,376,942
Due to affiliate	10,114,390	8,962,550	19,299,097
Purchases	18,359,341	242,834,229	229,046,919
Service fee expense	17,365,104	14,611,753	18,246,168
Service fee/management fee income	1,700,058	2,012,829	2,376,942
Other revenue	11,425,903	-	-
Dividend	10,000,000	15,000,000	5,000,000

NOTE 3 – CONCENTRATION OF CREDIT RISK AND OTHER RISKS

Risks

The Company maintains its cash accounts in two banks located in California and two banks in Canada. Management believes that the Company is not exposed to any significant risk related to cash and cash equivalents because of the high quality of the financial institutions where cash and cash equivalents are deposited.

For the year ended March 31, 2026, sales processed by the top two supermarket chains represented approximately 47% of total facility owner gross sales; as of March 31, 2026, approximately 22% of the accounts receivable from facility owners are associated with two supermarket chains.

For the year ended March 31, 2025, sales processed by the top two supermarket chains represented approximately 44% of total facility owner gross sales; as of March 31, 2025, approximately 31% of the accounts receivable from facility owners are associated with two supermarket chains.

For the year ended March 31, 2024, sales processed by the top two supermarket chains represented approximately 43% of total facility owner gross sales; as of March 31, 2024, approximately 37% of the accounts receivable from facility owners are associated with these three supermarket chains.

NOTE 4 – EQUIPMENT

At March 31, 2026 and 2025, equipment is summarized by major classifications as follows:

	2026	2025
Vehicles	$ 3,510,650	$ 3,055,402
Computer equipment	2,010,768	1,773,660
Furniture and fixtures	457,822	628,485
Building improvements	1,608,898	-
	7,588,138	5,457,547
Accumulated depreciation	(3,037,538)	(2,620,379)
	4,550,600	2,837,168
Construction in progress	-	1,590,017
	$ 4,550,600	**$ 4,427,185**

The Company's depreciation expense totaled $1,139,749, $935,405, and $830,411 for the years ended March 31, 2026, 2025, and 2024, respectively.

NOTE 5 – INCOME TAXES

The Company is included in the consolidated income tax returns of the Parent Company as a member of an affiliate group for U.S. federal and certain state income taxes. For financial reporting purposes, the provision for income taxes is computed as if the Company were filing on a separate return basis. The Parent Company pays federal and certain state income taxes on behalf of the Company. Federal income tax payable is determined based on the consolidated taxable income and allocated based on the individual taxable income of the members of the group. State income tax payable is calculated based on standalone taxable income for each state that the Company files a separate income tax return and combined taxable income of the group for each state a consolidated income tax return is filed with the payable amount allocated according to the filing requirement of each member of the group.

NOTE 5 – INCOME TAXES (Continued)

Outstanding income tax balances related to the Company's share in income tax liability that have been offset against due from Parent Company as of March 31, 2026 and 2025 amounted to $2,699,411 and $3,100,968, respectively. The components of the provision for income taxes for the years ended March 31, 2026, 2025, and 2024 are as follows:

	2026	2025	2024
Current taxes:			
Federal	$ 2,947,294	$ 2,715,944	$ 3,556,076
State	894,876	760,033	1,321,642
Foreign	54,245	178,639	124,237
	3,896,415	3,654,616	5,001,955
Deferred taxes:			
Federal	371,384	(125,465)	(253,801)
State	167,510	112,797	(197,269)
	538,894	(12,668)	(451,070)
	$ 4,435,309	**$ 3,641,948**	**$ 4,550,885**

The provisions for income taxes for the years ended March 31, 2026, 2025, and 2024 are different from the amounts computed by applying the statutory U.S. federal income tax rate to net income before income taxes primarily due to state/foreign income taxes, foreign-derived intangible income deduction, foreign tax credits and certain non-deductible items.

NOTE 5 – INCOME TAXES (Continued)

The components of the Company's deferred tax assets and liabilities at March 31, 2026 and 2025 are stated below:

	2026	2025
Deferred tax assets:		
Accrued vacation	$ 278,000	$ 277,000
Accrued bonus	256,000	218,000
Allowance for doubtful accounts	16,000	126,000
Deferred revenue	3,401,000	3,684,000
Lease liabilities	17,000	27,000
Foreign tax credits	256,000	240,000
Translation adjustments	305,000	368,000
Total deferred tax assets	4,529,000	4,940,000
Deferred tax liabilities:		
Right-of-use assets	(17,000)	(27,000)
Research and development	-	(41,000)
State taxes	(3,368)	(36,721)
Equipment basis	(580,000)	(314,000)
Total deferred tax liabilities	(600,368)	(418,721)
Net deferred tax assets	**$ 3,928,632**	**$ 4,521,279**

As of March 31, 2026, the Company had foreign tax credit carryforwards for U.S. federal tax purposes of $256,000 which expire in tax years 2034 to 2035.

The Company believes that its deferred tax assets are more likely than not to be realizable based on estimates of future taxable income.

NOTE 6 – FACILITY LICENSING CHARGES

The Company enters into license agreements with facility owners which allow the Company or franchisees to operate food service counters as separate departments within supermarkets and other venues. As provided in the license agreements, the facility owners are entitled to receive consideration equivalent to a certain percentage of gross sales collected at franchised stores and company-managed stores. Facility licensing charges constitute a cost of the Company in granting the franchise rights to franchisees and the cost of selling food and related products at the company-managed stores.

NOTE 6 – FACILITY LICENSING CHARGES (Continued)

Total gross sales at franchised stores and company-managed stores collected by facility owners amounted to $1,213,762,588, $1,196,589,998, and $1,207,837,708 for the years ended March 31, 2026, 2025, and 2024, respectively.

The facility licensing charges presented under operating expenses in the statement of comprehensive income amounted to $320,206,755, $314,732,074, and $318,498,056 for the years ended March 31, 2026, 2025, and 2024, respectively.

NOTE 7 – FRANCHISE OPERATIONS

The Company executes franchise agreements that set the terms of its arrangement with each franchisee for five years. If fully compliant with all requirements, a franchisee may generally renew their agreement upon the expiration of the agreement, which is usually for another period of five years.

Franchise revenue for the years ended March 31, 2026, 2025 and 2024 is as follows:

	2026	2025	2024
Sales-based royalty	$ 405,745,697	$ 398,436,714	$ 400,795,516
Franchise fees	6,401,816	5,939,521	5,351,042
Others	5,192,307	4,260,817	4,719,026
	$ 417,339,820	**$ 408,637,052**	**$ 410,865,584**

Others consist of mainly training fee and additional services that are being provided to franchisees.

As of March 31, 2026, the number of franchisees in the United States and Canada amounted to approximately 2,986 and 171, respectively. The number of franchisee-operated locations in the United States and Canada approximated 3,827 and 213, respectively.

As of March 31, 2025, the number of franchisees in the United States and Canada amounted to approximately 3,146 and 60, respectively. The number of franchisee-operated locations in the United States and Canada approximated 4,128 and 64, respectively.

In certain instances, the Company may temporarily operate a food service counter until a franchisee is found. The number of company-managed locations as of March 31, 2026 and 2025, is approximately 167 (United States – 134; Canada – 33) and 302 (United States – 299; Canada – 3), respectively.

NOTE 7 – FRANCHISE OPERATIONS (Continued)

As provided in the franchise agreement, franchisees are entitled to receive commissions based on a certain percentage of gross sales from franchised stores as agreed by the Company and the franchisee. These franchisee commissions amounted to $769,744,168, $762,711,228, and $780,540,690 for the years ended March 31, 2026, 2025, and 2024, respectively. Amounts owed by the franchisees for food purchases, related products, and other charges are deducted from their commission.

NOTE 8 – 401(K) SAVINGS PLAN

The Company belongs to the AFC 401(k) Retirement Plan (the "Plan") in which eligible employees of the Company can participate. The Plan is currently sponsored by the Parent Company. Under the Plan, eligible participants can elect to defer up to 90% of their wages, subject to statutory limitations. The Plan allowed for a matching contribution equal to 50% of the first 6% contributed by the employees. Employees are eligible to participate if the employee has three months of service with one hour of service (one year of service with 1,000 hours of service prior to January 1, 2026) completed. The Company's contributions totaled $362,426, $320,509, and $222,222 for the years ended March 31, 2026, 2025, and 2024, respectively.

NOTE 9 – LEASES

The Company leases central kitchen space and copy machines under operating lease agreements that expire in August 2027 to April 2029. The central kitchen space leases include an option to extend the lease term. The Company considers such an extension option in determining the lease term, when it is reasonably certain to exercise the extension option. All central kitchen space leases were considered short-term leases. As of March 31, 2026, all central kitchen space leases were terminated.

The Company had a vehicle lease classified as a finance lease with an interest rate of 0.73% which expired in August 2023. At March 31, 2023, this finance lease was included in other assets and amounted to $1,692.

NOTE 9 – LEASES (Continued)

Operating lease cost is recognized on a straight-line basis over the lease term. The components of lease expense are as follows for the years ended March 31, 2026, 2025 and 2024:

	2026	2025	2024
Operating lease cost	$ 53,336	$ 63,170	$ 62,633
Variable lease cost	48,452	29,946	18,865
Finance lease cost – amortization of right of use assets	-	-	423
Finance lease cost – interest on lease liabilities	-	-	34
Short-term lease cost	193,480	333,810	368,964
	$ 295,268	**$ 426,926**	**$ 450,919**

Supplemental cash flow information related to leases is as follows for the years ended March 31, 2026, 2025 and 2024:

	2026	2025	2024
Cash paid for amounts included in measurement of lease liabilities:			
Operating cash outflows – payments on operating leases	$ 31,587	$ 57,818	$ 56,723
Operating cash outflows – payments on finance leases	-	-	34
Financing cash outflows – payments on finance leases	-	-	1,746
Right-of-use assets obtained in exchange for lease obligations:			
Operating lease	18,155	-	127,292

NOTE 9 – LEASES (Continued)

As of March 31, 2026, 2025 and 2024, the lease term and discount rate for leases are as follows:

	2026	2025	2024
Weighted-average remaining lease term:			
Operating lease	1.8 years	2.19 years	2.95 years
Finance lease	-	-	-
Weighted-average discount rate:			
Operating lease	4.29%	4.15%	3.93%
Finance lease	-	-	-

Future undiscounted cash flows for each of the next five years and thereafter and a reconciliation to the operating lease liabilities recognized on the balance sheet are as follows as of March 31, 2026:

Years Ending March 31,	
2027	$ 39,672
2028	19,082
2029	4,908
Total lease payments	63,662
Less imputed interest	(2,438)
Total present value of lease liabilities	**$ 61,224**

NOTE 10 – CONTINGENCIES

The Company is exposed to various asserted and unasserted legal claims, actions and complaints in the ordinary course of business including disputes regarding franchise agreement provisions or terminations, unfair business practices, product quality and trademark infringement. It is the opinion of management that the resolution of such claims will not have a material adverse effect on the financial position or results of operations of the Company.

NOTE 11 – SUBSEQUENT EVENTS

The Company has evaluated subsequent events through July 31, 2026, the date on which the financial statements were available to be issued.

On July 1, 2026, the Company declared dividends of $2,000 per share of outstanding stock of 5,000 shares, totaling $10,000,000, payable on or before July 31, 2026 to the Parent Company as of July 1, 2026. Because the dividends were declared subsequent to March 31, 2026, no liability has been recorded in the financial statements.

EXHIBIT B

FRANCHISE APPLICATION

Advanced Fresh Concepts Franchise Corp.

Fax: 310-604-6449 Franchise Application Form Attn: _____

AFCFC welcomes and considers applicants for franchises without regard to race, color, religion, ancestry, national origin, age, disability, medical condition, genetic information, marital status, sexual orientation or other protected characteristics. AFCFC is an Equal Opportunity Franchisor.

Application # _____ Date of Application: _____

Applicant Information

Name (Print) _____ _____
Last First Middle Other name SSN or any other identifying number

Current Address _____

_____
City State Zip Code

Physical U.S. Residence, if different from above _____

_____
City State Zip Code

Home Phone (_____) _____ Work Phone (_____) _____

Mobile _____ (_____) _____ E Mail _____

Where did you hear about us? _____

Location

Potential Franchisee
Location Preference _____ _____ _____ ☐
Anywhere

Location 1 Location 2 Location 3

Education

	Print the name and city of each school	Graduated Yes or No	Degree Awarded
High School			
College			
Vocational			

Employment Record

Are you currently working as a sushi chef or helper at an AFC Food Service Counter? Yes ☐ No ☐
If yes, where and who is your employer? _____

Have you ever worked at an AFC Food Service Counter before? Yes ☐ No ☐
If yes, when and where? _____

Have you ever worked at <u>any</u> Sushi Bar before? Yes ☐ No ☐
If yes, when and where? _____

Have you ever worked at a food service establishment before? Yes ☐ No ☐
If yes, when and where? _____
(Continued on other side)

Are you now employed? Yes ☐ No ☐

Can we contact your **present** employers for references? Yes ☐ No ☐ _____
(Sign Here)

If you checked no, please explain _____

Can we contact your **former** employer(s) for references? Yes ☐ No ☐ _____
(Sign Here)

If you checked no, please explain _____

List present and all former Employers or Personal Business (use additional sheets if necessary)

Dates Employed	Employer Name, Address and Phone #		Position	Reason for leaving

Other Information

Have you ever been convicted of a criminal offense (felony or misdemeanor)? Yes ☐ No☐
(Convictions for marijuana-related offenses that are more than two years old need not be listed.)

If yes, state nature of the crime(s), when and where convicted, and disposition of the case? _____
_____
_____

A conviction does not automatically disqualify you from consideration for an AFC franchise.

Are you legally eligible to work in the United States? Yes ☐ No ☐
Proof of Eligibility documentation must be provided before signing a franchise agreement as required by law.

Are you at least 18 years of age? Yes ☐ No ☐

Are you now or have you been subject to any judgments, liens or garnishments within the last 5 years? Yes ☐ No ☐

Real Estate Investments (list all real estate held)

Description or street address of property _____
_____

Date of purchase _____Cost _____

Monthly/Mortgage Payment _____ Balance _____

Emergency Contact

	Name	**Address & Phone Number**	**Relationship**
I			
II			

Name of friends and relatives who are employed by or are franchisees for AFC or AFCFC.

	Name	**Relationship**	**Address & Phone No.**
I			
II			

Name of family or friends who are currently operating other Sushi or Food Service Businesses.

	Name	**Relationship**	**Address & Phone numbers**
I			
II			

Personal, and Professional References

	Name	**Phone**	**Address**
I			
II			

Please read carefully and sign:
By signing below, I certify, represent and warrant that:

1. The undersigned personally completed this application;

2. The information provided in this application and any accompanying resume or documentation, is all true and correct;

3. I understand that any omission or false or misleading information on this application or in any document produced by me in connection with this application may disqualify me from further consideration and may lead to immediate termination of my franchise when discovered later, regardless of the time elapsed before discovery;

4. I authorize the investigation of all information, references, work records, education and all other matters related to my suitability to be a franchise owner. I further authorize the references listed above to disclose to AFCFC any and all letters, reports, and other information related to my work records, without providing me prior notice of such disclosure. I hereby release AFCFC, my former employers, and all other persons, corporations, partnerships, and associations from any and all claims, demands and/or liabilities arising out of or in any way related to such investigation or disclosure. I authorize AFCFC to conduct a background check on me and have signed the Disclosure and Authorization for Business Relationship form.

5. No representative of AFCFC has any authority to enter into any agreement for any specified period of time, or to make any agreement contrary to the foregoing, unless it is in writing and signed by an authorized company representative. No representative of AFCFC is authorized to provide me information or make any representation to me about actual or potential sales, profits or earnings. However, we may provide actual sales information for a specific outlet being offered to you for sale.

6. The information contained in this application is not confidential. I authorize AFCFC to provide this Application or any of its contents to the owner or management of any location(s) where it is possible I may operate an AFC food service counter.

7. I understand this is an Application, not an agreement. There is no promise to consider this Application or to grant me a franchise.

Applicant's Signature _____ **Date** _____

For Office use only

Interviewer	Action Taken	Position/Dept.	Starting Date	Store Location

EXHIBIT C

FRANCHISE AGREEMENT

FRANCHISE AGREEMENT

This Franchise Agreement (this "Agreement") is made and entered into on _____, 20__ between Advanced Fresh Concepts Franchise Corp. a California corporation whose address is 19700 Mariner Avenue, Torrance, California 90503 ("Franchisor"), and _____ whose address is _____("Franchisee"), with reference to the following facts:

R E C I T A L S

Franchisor is the owner of certain intellectual property comprised of trademarks, know-how, trade secrets and other intangible property and a licensee of other marks, all comprising a system (the "AFC System") for developing and operating food service counters in grocery stores, retail stores and other locations. Franchisee desires to be granted a franchise to establish and operate food service counter(s) using the AFC System. Franchisor is willing to grant a franchise to Franchisee on the terms in this Agreement. Accordingly, the parties now agree as follows:

A G R E E M E N T

1. Appointment.

Franchisor grants to Franchisee, and Franchisee accepts, the right to operate one or more Zenshi Counter(s), AFC Food Service Counter(s), or Wild Blue Counter(s) (the "Food Service Counter(s)") as indicated in and at the location(s) identified in the Franchise Addendum(s) attached to this Agreement (the "Franchise Addendum(s)") using the AFC System as it may be modified or further developed by Franchisor, all according to the terms in this Agreement. Franchisee acknowledges that the Franchise Addendum(s) may be comprised of one or more of the following: Full-Time Location Franchise Addendum, Part-Time Location Franchise Addendum and/or Self-Service Location Addendum. Franchisee shall use Franchisee's best efforts to develop and expand the market for the goods and services offered by the Food Service Counter(s) and shall cooperate with Franchisor in accomplishing the purposes of this Agreement.

2. Term.

The term of this Agreement shall be five years starting on the date stated in the introductory paragraph of this Agreement and ending on the fifth anniversary of that date, notwithstanding any start date stated in any Franchise Addendum between Franchisee and Franchisor. Regardless of the term, this Agreement shall terminate earlier on the date this Agreement is terminated as provided in Sections 15.1 through 15.5. Further, at any time during the five year term, Franchisee may apply to Franchisor in writing to terminate this Agreement early, with the termination to be effective on the 90th day following delivery of written notice, or such earlier time as the parties mutually agree in writing. Franchisor shall have 30 days to accept Franchisee's early termination request. Franchisor's failure to accept Franchisee's request within such 30 day period shall be deemed Franchisor's election to reject Franchisee's early termination request.

3. Location(s).

3.1. Initial Location(s). Franchisee shall operate the Food Service Counter(s) only at the location(s) identified in the Franchise Addendum(s).

3.2. Relocation. In the event of the loss of the right or consent to operate at any of Franchisee's location(s), or the location owner's or manager's objection to Franchisee, without fault of Franchisee,

Franchisor shall attempt to identify a new location for Franchisee, and shall consent to relocation of the affected Food Service Counter to an alternate location and site acceptable to Franchisor. Any such relocation shall be at Franchisee's sole expense. Franchisee acknowledges that relocation may not be possible before expiration of the term of this Agreement, or at all; that any new location may not be comparable to the old; and that relocation, if possible, could involve a substantial interruption in operating the Food Service Counter until a new location is identified and prepared. Franchisee releases Franchisor and its affiliates, and each of their respective officers, directors, agents and employees from any loss of right or consent to operate at the location, and further agrees not to hold Franchisor liable for any such event during the term of this Agreement or thereafter.

3.3. Acknowledgment. Franchisee acknowledges that the right to locate any Food Service Counter at a particular location, may be derived from an agreement between Franchisor (or an entity affiliated with Franchisor, such as Advanced Fresh Concepts Corp.) and the owner or lessee of the location where the Food Service Counter is located; that the agreement may be modified or terminable by the owner and/or manager of the location at any time and on short notice; and/or the owner or facility manager may object to Franchisee operating there; and that modification, termination or objection by the owner or facility manager may therefore result in the need for relocation and resulting disruption and interruption to Franchisee or adjustment to the franchise operations (such as if the facility owner requests that the operations be converted from a full time location to a self-service, or part time location, and vice versa). Franchisee also acknowledges that the owner or facility manager may require changes to the type of food products offered at the Food Service Counter and other changes. Franchisee acknowledges that the choice of location (identified in the Franchise Addendum(s)), types of food offered at the location, types of operations (full time, part time or self-service) and right to continue operating at the location is subject to the location owner's and/or manager's consent.

3.4. No Exclusivity. This Agreement does not include any territory or marketing exclusivity. Franchisor shall have the right to operate or grant franchises or licenses to others to operate food service counters under the marks "Zenshi," "AFC," "Wild Blue," or any other mark anywhere, regardless of how close they are to the Food Service Counter(s) that Franchisee operates; to sell products and other items to anyone and anywhere (even in the facilities where Franchisee operates), including, but not limited to pre-packaged products and central kitchen products identified by the Marks (as defined below) or other marks, whether or not such marks are authorized for use by Franchisee, as well as other products or services under the Marks and other trademarks and service marks. Furthermore, Franchisor shall have the right to use other channels of distribution, such as the Internet, telemarketing, catalog sales, other direct marketing sales and other means to advertise, sell and distribute products to anyone and anywhere; and other Zenshi/AFC/Wild Blue Food Service Counters (regardless of who owns or operates them) may advertise to and solicit prospective customers regardless of geographic location. Franchisor shall have no obligation to compensate Franchisee for any sales made through these methods or any other methods.

3.5. Restrictions on Distribution Methods. Franchisee shall only sell products to end customers who are physically present at Franchisee's Food Service Counter(s). Franchisee shall not engage in the resale of any product or supply at wholesale, retail or otherwise without Franchisor's express written consent. Franchisee shall not use any other channels of distribution such as the Internet, catalog sales, telemarketing or otherwise to conduct sales.

4. Trademarks.

4.1. Ownership. Franchisee acknowledges that Franchisee owns no right, title, interest or goodwill in the trademarks "Zenshi," "Advanced Fresh," the oval AFC logo, "Wild Blue," "Hybrid Sushi," "Southern Tsunami," the Southern Tsunami logo, or any other marks or trade dress that Franchisor adopts and permits Franchisee to use from time to time (collectively, the "Marks"); that as between Franchisee and Franchisor all right, title and interest in and to the Marks shall be deemed to be owned by Franchisor; that all usage of the Marks and goodwill established by that use is exclusively for Franchisor's benefit; and that this Agreement does not confer any goodwill or other interests in the Marks on Franchisee.

4.2. Use. Franchisee shall not use any Mark or portion of any Mark as part of the name of any business entity. Franchisee shall not use any Mark in selling any unauthorized product or service or in any manner not expressly authorized in writing by Franchisor. Franchisee shall not establish an email address or an Internet web site or the like using any domain name containing the words "Zenshi," "Advanced Fresh," "AFC," "Wild Blue," "Hybrid Sushi," "Southern Tsunami," or any variation without Franchisor's prior written consent. Franchisee shall only use the Marks associated with the Food Service Counter concept Franchisee is permitted to operate. Franchisee shall give notices of trademark and service mark registration that Franchisor specifies and obtain fictitious or assumed name registrations as may be required by applicable law. Franchisee shall restrict use of the Marks as may be required by each owner of the facility where the Food Service Counter(s) is/are located.

4.3. Notice. Franchisee shall notify Franchisor immediately of any claim or demand arising from any attempt by any other person or entity to use the Marks or any similar marks or if Franchisee discovers anyone else is infringing the Marks. Franchisor shall have the sole right and obligation to decide what action, if any, to take with regard to any such matter and Franchisee shall cooperate with Franchisor and execute any and all documents and take all actions that Franchisor requests with regard to the matter.

4.4. Change. If it becomes advisable at any time, in Franchisor's sole discretion, for Franchisor to modify or discontinue use of any Mark, and/or use one or more additional or substitute trade names, trademarks, service marks or other commercial symbols, Franchisee shall comply with Franchisor's directions to do so at Franchisee's cost and expense.

4.5. Inspection. To preserve the validity and integrity of the Marks and to assist Franchisor in steps seeking to assure that Franchisee operates according to this Agreement and uses the Marks properly in operating the Food Service Counter(s), Franchisor or its agents shall have the right to enter and inspect the Food Service Counter(s), and to interview customers, suppliers or others, at all reasonable times. Franchisee shall fully cooperate with Franchisor in any inspection or visit Franchisor conducts and shall provide Franchisor's personnel full access to the Food Service Counter(s) for this purpose. Any obstruction, interference or prohibition by Franchisee of Franchisor's right to inspect the Food Service Counter(s), including, without limitation, to investigate threats or dangers to public health and safety, shall constitute a material breach of this Agreement. If Franchisor, in its sole discretion, determines that a lab test is required to test the quality, safety and freshness of the foods sold at any Food Service Counter operated by Franchisee, Franchisor shall have the right to assess Franchisee a lab fee of up to $500 for each sample tested.

4.6 Location Exceptions. Franchisee acknowledges that at certain locations, Franchisee may not be able to use the Marks due to agreements with the facility owner. Franchisee shall abide by such requirements.

5. Confidential Operations Manuals.

5.1. Loan of Operations Manuals. Franchisor shall loan to Franchisee during the term of this Agreement one copy of Franchisor's confidential Operations Manual, one copy of Franchisor's Standard Sanitation Operating Procedure and Methods Manual, Recipe Manual(s) applicable to the franchise and one Steam Table Operating Manual, if applicable to Franchisee's business (collectively the "Manuals") for each Food Service Counter operated by Franchisee, except, no Manuals shall be provided for a Self Service location. The Manuals shall contain mandatory and suggested specifications, standards, operating procedures and rules prescribed from time to time by Franchisor for Food Service Counters. Franchisor shall have the right to modify the Manuals from time to time. Franchisee shall comply with the Manuals, as modified by Franchisor. Franchisee shall pay Franchisor's then current manual lease fee for each Manual received from Franchisor. The manual lease fee paid by Franchisee shall be refunded to Franchisee when Franchisee returns the Manuals to Franchisor within 30 days of the termination or expiration of this Agreement or any applicable addendum. For purpose of clarification, there shall be no refund if Franchisee fails to return the Manual(s) or returns any manual more than 30 days after expiration or termination of this Agreement or any applicable addendum.

5.2. Ownership. The Manuals shall be at all times the sole property of Franchisor. Franchisee shall return the Manuals immediately on expiration or termination of this Agreement. Franchisee shall not make and shall not let Franchisee's personnel make any copy of all or part of the Manuals.

5.3. Confidentiality. Franchisee acknowledges that the Manuals contains confidential information and that its loss or disclosure would cause substantial damage to Franchisor. Franchisee shall protect the Manuals as a trade secret of Franchisor.

6. Confidential Information.

6.1. Secrets. Franchisee acknowledges that Franchisor's product recipes, methods of preparing the products, and operating procedures for a Food Service Counter are valuable and secret in the sense that they are not generally known to competitors of Franchisor. Other information that Franchisor designates as confidential shall be deemed confidential for this Agreement, except information that Franchisee proves he or it knew before disclosure from Franchisor; or lawfully entered the public domain, through publication by others.

6.2. Protection. Franchisee shall maintain the confidentiality of all trade secrets during and after the term of this Agreement. Franchisee shall not use this information in any other business or in any manner not specifically authorized or approved in writing by Franchisor. Franchisee shall reveal the trade secrets to employees only to the extent they need the information to perform their jobs. Franchisee shall use reasonable precautions to require employees to keep the information confidential; and shall take any additional steps to protect confidentiality that Franchisor requests from time to time.

6.3. Acknowledgments. Franchisee acknowledges that (a) the trade secrets also include information that cannot be removed from Franchisee's knowledge and memory and that would inevitably be used and disclosed if Franchisee held interests in any competitive business; (b) Franchisor could not protect the trade secrets against unauthorized use or disclosure, could not readily assure compliance with Sections 6.1 through 6.2 if Franchisee held interests in any competitive business; and that (c) involvement by Franchisee in any competitive business would create a high level of temptation and opportunity to use Franchisor's trade secrets.

6.4. Exclusive Dealing. Franchisee acknowledges that Franchisor enters into this Agreement in consideration of, and reliance on Franchisee's agreement to deal exclusively with Franchisor and to refrain from using any of Franchisor's trade secrets in any activity competitive with Franchisor, and to refrain from transferring the goodwill associated with the Marks to any other business. Therefore, during the term of this Agreement, Franchisee and, collectively and individually all directors, officers and holders of any direct or indirect beneficial ownership interest of five percent (5%) or more of the securities or other equity interests of Franchisee, or of any corporation, limited liability company, partnership or other form of entity affiliated with or directly or indirectly controlling or controlled by Franchisee, and each relative of each such person who is an individual, including each such person's mother, father, husband, wife, brother, sister, son or daughter (collectively "Covered Persons"), shall not have any interest as an owner, investor, partner, lender, director, officer, member, manager, employee, consultant, representative or agent or in any other capacity in any business selling Asian style foods, sushi or fresh fish products, steamed foods or any other retail food business without Franchisor's prior written consent. For 2 years after this Agreement expires without renewal or terminates, Franchisee and all Covered Persons shall not have any interest as an owner, investor, partner, lender, director, officer, member, manager, employee, consultant, representative or agent or in any other capacity in any business selling Asian style foods, sushi or fresh fish products, steamed foods or other food items developed or sold in the AFC System without Franchisor's prior written consent within:

A. 5 miles of any food service counter operated by Franchisor or by any franchisee or licensee or other affiliate of Franchisor in a major city (as defined below);

B. 10 miles of any food service counter operated by Franchisor or by any franchisee or licensee or other affiliate of Franchisor in a metropolitan area (as defined below);

C. 15 miles of any food service counter operated by Franchisor or by any franchisee or licensee or other affiliate of Franchisor in a rural area (as defined below).

D. For this Agreement, a "major city" means any of the top 25 cities in the U.S. measured by population; a "metropolitan city" means any city other than a major city where the population density is greater than 1,000 people per square mile; and a "rural area" means an area whose population density is 1,000 people per square miles or less. These figures shall be measured at the time of expiration or termination.

E. On written request from Franchisee, Franchisor will provide Franchisee a list of locations within a reasonable geographic area, to assist Franchisee in complying with this obligation.

6.5. Exceptions. The restrictions in Section 6.1 through 6.4 shall not apply to ownership of (a) securities listed on a stock exchange or traded on the over the counter market that represent two percent (2%) or less of the number of shares of the class of securities issued and outstanding; or (b) other food service counters that Franchisee has an interest in pursuant to a written agreement with Franchisor.

6.6. Separate Covenants. Each of the covenants in Sections 6.1 through 6.4 and each portion thereof, shall be construed as independent of any other covenant or provision. If all or any portion of a covenant is unenforceable due to its scope in terms of geography, duration, or activity covered or otherwise, but could be enforced if reduced in scope, then the parties agree to be bound by any lesser covenant subsumed within the terms of such covenant imposing the maximum duty permitted by law, as if the resulting covenant were separately stated in and made a part of the applicable provision within Sections 6.1 through 6.4.

7. System Changes.

7.1. Changes by Franchisor. Franchisee acknowledges that periodically Franchisor may modify any aspect of the AFC System, including, but not limited to, as required by law. Franchisor reserves the right to expand food offerings available at Food Service Counter(s), including hot foods and other food types. Franchisor shall communicate modifications through the Manuals or other ways. Franchisee shall comply with all modifications that Franchisor makes from time to time, at Franchisee's expense.

7.2. No Changes by Franchisee; Improvements to the AFC System. Franchisee shall not modify or deviate from any aspect of the AFC System without Franchisor's prior written consent. Franchisee shall notify Franchisor in writing of any proposed improvement to the AFC System ("Improvement") and provide to Franchisor such information as Franchisor requests regarding the Improvement. Any Improvement to the AFC System made by Franchisee for any purpose will be deemed to be a "work made for hire" under U.S. copyright law for the benefit of Franchisor, and therefore, Franchisor shall own the intellectual property rights in and to the improvements and may use the same for any and all purposes. To the extent any Improvement does not qualify as a work made for hire, Franchisee hereby assigns those Improvements to Franchisor for no additional consideration and with no further action required. Franchisee shall sign all further assignments or instruments, as Franchisor may request to effectuate the parties' agreement hereunder. If Franchisee should fail to do so, Franchisee hereby appoints Franchisor as Franchisee's attorney-in-fact with full power and authority for the sole purpose of executing and filing all assignments and other instruments necessary to obtain title to the Improvements in the name of Franchisor. This appointment shall be deemed to be coupled with an interest and shall continue in full force and effect following the termination or expiration of this Agreement. Franchisor shall have the right to incorporate the Improvements into the AFC System and into any other businesses in which Franchisor or its Affiliates have an interest without compensation to Franchisee. If the foregoing provisions of this Section 7.2 are found to be invalid or otherwise unenforceable, Franchisee hereby grants Franchisor a worldwide, perpetual, non-exclusive, fully paid license to use and sublicense the use of the Improvement to the extent Franchisor's use or sublicense would, absent this Agreement, directly or indirectly infringe Franchisee's rights therein.

8. Advertising.

8.1. Approval. Franchisee shall submit to Franchisor for prior approval, all advertising and promotion that Franchisee proposes to use, whether for print, broadcast, electronic or other media (including on the Internet), as well as novelty items, signs and containers. Franchisee shall use those materials only after receiving Franchisor's written consent, and shall not use any material without first obtaining Franchisor's written consent. Franchisor may withhold or later revoke consent, or may condition consent on modifications or other restrictions. Delay by Franchisor to require compliance or cure does not waive Franchisor's rights under this Section 8.1.

8.2. Advertising Restrictions. Franchisor shall have the right to impose geographic and/or other restrictions on advertising that Franchisee conducts or proposes to conduct. Franchisee shall include trademark and copyright notices and notices of independent ownership in advertising as Franchisor requests from time to time.

8.3. Phone Directory. Franchisor shall have the right to require Franchisee to maintain a listing in local telephone directories, according to standards set by Franchisor.

8.4. Cooperative Advertising. Franchisor reserves the right, in the future, to designate a geographic region that includes Franchisee's Food Service Counter(s) and at least one other Zenshi/AFC/ Wild Blue food service counter as a local, regional or national cooperative area, for the purpose of

developing a cooperative program. Franchisee shall participate in and contribute its share to the cooperative designated by Franchisor, as determined according to the cooperative's operating procedures. The cooperative shall operate according to written governing documents prepared by or consented to by Franchisor. Franchisor shall have the right to veto any decision of the cooperative. Franchisor shall have the power to form, change, dissolve or merge cooperatives, at Franchisor's discretion.

8.5. Grocery Store Objection. Franchisee shall not conduct any advertising that is objectionable to the owner or manager of the premises where the Food Service Counter is located.

8.6. Advertising Campaigns. Franchisor may conduct regional or national advertising campaigns, geotargeted marketing campaigns, or national news and weather campaigns, ("Advertising Campaigns"). In the event Franchisor conducts any such Advertising Campaigns, Franchisor shall have the right to bill Franchisee for the pro-rata share of such campaigns, pursuant to Section 9.18, Franchisor may absorb some of the cost for such advertising, but is not obligated to do so. Franchisor undertakes no obligation, in administering the Advertising Campaigns, to make expenditures for Franchisee that are equivalent or proportionate to its contribution, or to ensure that any particular Franchisee benefits directly or pro rata from marketing or promotion conducted with the Advertising Campaigns. Food Service Counters operated by Franchisor or Franchisor's affiliates may, but are not required to, contribute to the Advertising Campaigns. If they do, they may not be required to contribute in the same percentage as Franchisee and may stop contributing at any time without notice to Franchisee. Franchisor shall prepare an annual unaudited accounting of the expenditures of the Advertising Campaigns which will be provided to Franchisee upon Franchisee's written request.

9. Fees and Compensation.

9.1 Initial Fee. Franchisee shall pay to Franchisor Franchisor's then current initial franchise fee for each Full Time Location to be operated by Franchisee under this Agreement. The initial fee shall be specified in the applicable Full Time Location Addendum. Franchisee acknowledges that Franchisor does not currently charge initial fees for Part-Time or Self Service location(s), however, Franchisee must have at least one operating Full Time location to be granted rights to a Part Time or Self Service location. While Franchisor does not currently charge initial fees for Part Time and Self Service locations, Franchisor reserves the right to implement such fees in the future. Franchisee shall pay the initial fee(s) in a lump sum on signing each Full Time Location Addendum. The fee is deemed to be fully earned on signing each addendum, and is nonrefundable. There shall be no refunds or prorations if a location starts as a Full Time location and later is transformed into a Self Service or Part-Time location. However, if a location starts as a Self Service or Part-Time location and is transformed into a Full Time location, then Franchisee shall pay Franchisor's then current initial franchise fee for such Full Time location.

9.2. Customer Payments. Franchisee acknowledges that under the AFC System's initial structure, Franchisee shall not receive payments for sales of goods and services of the Food Service Counter(s); and that those payments will be made directly or indirectly from customers to the facility (for example, a grocery store) where the Food Service Counter(s) is/are located, which shall then direct all payments to Franchisor, less an amount to be retained by the facility owner, pursuant to the facility owner's separate agreement with Franchisor. Franchisee acknowledges that under the AFC System, all sales will be sold by and through cash registers owned or operated by the owner of the facility where the Food Service Counter(s) is/are located. Franchisee shall not make any sales through cash registers of Franchisee without prior written consent of Franchisor. Franchisor shall have the right, but no obligation, to modify this payment structure from time to time.

9.3. Payments to Franchisee. Franchisor shall return to Franchisee the percentage amounts stated in the applicable Franchise Addendums attached to this Agreement. Franchisor shall have the right to deduct all amounts owed by Franchisee to Franchisor from the payments to Franchisee provided for in the applicable Franchise Addendum, or elsewhere, either as lump sum deductions or partial deductions made over time, until such deductions equal the full amounts owed to Franchisor. Franchisee acknowledges that Franchisor's sole responsibility shall be to remit to Franchisee the agreed commission percentage on amounts actually received from the facility owner. Franchisor shall have no responsibility to pay any commission to Franchisee on amounts not received from the facility owner. If Franchisor pays Franchisee's commission in any given month before receiving payment from the facility owner, and the facility owner does not pay Franchisor as required, Franchisee shall reimburse Franchisor the commissions paid. Franchisee shall reimburse Franchisor any amounts paid to Franchisee, that Franchisor discovers were paid in error. At Franchisor's discretion, Franchisor shall have the right (in lieu of Franchisee reimbursement) to withhold from future payments due to Franchisee such amounts paid in error. Franchisor shall send payments to Franchisee via direct deposit. Franchisee shall pay Franchisor's then current Paper Check Fee if Franchisor must send Franchisee's commissions via a manual check. .

9.4. Payment Responsibility. Franchisee shall be solely responsible to pay when due all costs and expenses of the Food Service Counter(s), including but not limited to the purchase price of food items and inventory, utilities, employee compensation, sales and any other taxes imposed on, required to be collected, or paid on account of goods or services furnished by Franchisee. Franchisee acknowledges and agrees that if the facility owner, due to labor contracts or otherwise, requires Food Service Counter(s) employees to be employed directly by the facility owner, and Franchisor is asked to reimburse the facility owner for these employment costs, that Franchisor shall have the right to and shall deduct such payments from the amounts due to Franchisee pursuant to Section 9.3 of the Franchise Agreement.

9.5. Royalty. Franchisor shall have the right at any time to revise the AFC System so that Franchisee collects revenues from sales, and pays Franchisor royalties on a basis approximately equivalent in amount or rate to amounts or rates that Franchisor receives and retains pursuant to this Agreement. Any such revisions made from time to time shall be deemed to occur pursuant to this Agreement and shall not constitute a modification of the Franchise or of this Agreement.

9.6. Gross Sales. "Gross Sales" shall mean revenues derived from Franchisee's sales. Gross Sales does not include sales tax, credits or refunds.

9.7 Customer Satisfaction Fee. Franchisor shall have the right to assess Franchisee up to One Thousand Dollars ($1,000) for each customer complaint received, whether the complaint has any merit or not. This fee is not a penalty but to compensate Franchisor for the efforts the Franchisor must take to address the complaint. Franchisor's assessment of the customer satisfaction fee shall not constitute a waiver by Franchisor of its rights to seek damages and/or other relief against Franchisee due to Franchisee's conduct.

9.8 Default Charge Fee. Franchisor shall have the right to assess Franchisee up to $2,000 per violation of any term, obligation or requirement of the Manuals or this Agreement. Franchisor's assessment of this fee shall not constitute a waiver by Franchisor of its rights to seek damages and/or other relief against Franchisee arising from the violation.

9.9 System/Data Charges. To gain access to Franchisor's website pages which enable Franchisee to submit purchase orders online, and obtain information on new products, product specifications and other information, updates to Franchisee's tablet data, and access to Franchisor's inventory tracking software, Franchisor shall charge Franchisee a monthly fee of up to $150 per Food Service Counter operated by Franchisee ("System/Data Charge"). Franchisor shall have the right to increase the System/Data Charges by ten percent (10%) annually.

9.10 Bankruptcy By Facility Owner. If the facility owner where Franchisee's Food Service Counter(s) is/are located files for bankruptcy, or other similar proceeding, Franchisor's sole responsibility shall be to remit to Franchisee the agreed percentage on amounts actually received from the facility owner. Franchisor shall have no responsibility to pay any commission to Franchisee on amounts not received from the facility owner. If Franchisor pays Franchisee's commission in any given month before receiving payment from the facility owner, and the facility owner does not pay Franchisor as required, Franchisee shall reimburse Franchisor the commissions paid.

9.11 Early Termination Fee. If this Agreement or any Franchise Addendum is terminated and/or if Franchisee abandons any Food Service Counter before the end of the term of this Agreement, Franchisor shall have the right, in addition to all other rights and remedies available to Franchisor in law and/or equity, to assess Franchisee an early termination fee of $1,500 for each location terminated and/or abandoned. Such fee shall be payable at the earlier of (1) the time Franchisee notifies Franchisor of the desire to terminate/abandon, or (2) actual termination or abandonment of any location. Franchisor's assessment of the early termination fee shall not constitute a waiver by Franchisor of its rights to seek damages and/or other relief against Franchisee due to the early termination and/or breach.

9.12 Administrative Fee. Franchisee shall reimburse Franchisor for Franchisor's costs and expenses in complying with tax levies and wage garnishments issued against Franchisee or Franchisee's owners, up to $100 per garnishment/levy request.

9.13 Third Party Audits and Charges. Franchisee shall reimburse Franchisor for amounts paid by Franchisor to third parties (including, but not limited to, government agencies and facility owner(s)) for audits, inspections, fines and/or charges imposed or levied against the Food Service Counter, including food safety, facility audits and customer service.

9.14 Shipping Administrative Fee. Franchisor shall have the right to charge and Franchisee shall pay Franchisor's administrative charges, to ship products to Franchisee's Food Service Counter, in an amount up to two and one-half percent (2 ½%) of the purchase price. The administrative fee is in addition to actual shipping costs to ship products to Franchisee's Food Service Counter.

9.15 Account Broker Fee. If Franchisor pays a fee for the right to locate the Food Service Counter in the facility or store, Franchisee shall reimburse Franchisor for the amounts paid, not to exceed $500 per quarter for each Food Service Counter subject to this fee.

9.16 Third-Party Delivery Fee. Franchisor may deduct from amounts owing to Franchisee any third-party delivery fees charged to Franchisor by the facility or store on account of purchases from the Food Service Counter. The third-party delivery fee charged to Franchisee will be in Franchisor's sole determination as follows: (i) the amounts charged to Franchisor by the facility or store on account of food delivered from the Food Service Counter or (ii) at Franchisor's discretion, Franchisor may agree to share a portion of the third-party delivery fee cost with Franchisee and deduct the agreed upon amount from the amounts due to Franchisee. Alternatively, the facility or store may charge the third-party delivery fee to Franchisee directly.

9.17 Local Store Marketing Expense. If the facility or store charges Franchisor for local marketing initiatives for the Food Service Counter, such as on-site advertisements, coupon offers, social media promotions, mailers and other advertising programs, Franchisor may deduct such amounts from amounts due to Franchisee.

9.18 Advertising Contribution Fee. Franchisor reserves the right to enter into Advertising Campaigns and to bill Franchisee for Franchisee's pro-rata share of such advertising (the "Advertising Contribution Fee"). Franchisor may absorb some of the cost for such advertising, but is not obligated to do so.

9.19 Extended Producer Responsibility Fee. If the state where Franchisee's Food Service Counter(s) are located requires Franchisor to pay a fee as a result of that state's regulation of paper, plastic and packaging (the "Extended Producer Responsibility Fee"), Franchisee shall reimburse Franchisor for the Extended Producer Responsibility Fee paid by Franchisor on account of Franchisee's Food Service Counter(s).

10. Accounting.

10.1. Recordkeeping. Franchisee shall maintain full, complete and accurate books, records and accounts of the sales and expenses of the Food Service Counter(s). Franchisee shall conform these records to any accounting system that Franchisor may prescribe in the Manuals or otherwise in writing. Franchisee shall retain all books and records relating to the Food Service Counter(s) for at least four years.

10.2. Reports. Franchisee shall provide Franchisor each week on or at other frequencies that Franchisor specifies from time to time, in the form approved by Franchisor, a report of sales for the week ending the prior day (Sunday). Franchisee shall provide Franchisor at frequencies that Franchisor requests, profit and loss statements and balance sheets for months, quarters and years, all as Franchisor specifies. These financial statements shall be certified to be true and correct by Franchisee. Franchisee shall provide Franchisor copies of all federal and state income tax returns and sales tax returns. Franchisee shall submit to Franchisor other periodic reports, forms and records as Franchisor requests from time to time.

10.3. Discrepancies. In any discrepancy between data as reported by Franchisee and as reported by the owner or lessee of the premises where the Food Service Counter is located, the data reported by the premises owner or lessee shall control. Franchisee shall notify Franchisor in writing within 30 days of receipt of the statement from the store premises of any alleged discrepancy. Franchisee shall have no right to seek adjustments for any discrepancy after such 30 day period.

10.4. Audit. Franchisor or its designated agents shall have the right at reasonable times to examine and copy books, records and tax returns of Franchisee. Franchisor shall also have the right, at any time, to have an independent audit made of books and records of Franchisee at Franchisor's expense. If an inspection reveals a discrepancy or underreporting of sales of one percent (1%) or more for any period, then Franchisee shall take corrective action, including but not limited to paying Franchisor the amounts that would have been paid but for any underreporting, all as Franchisor specifies; and interest at the rate of 1% per month (12% per year) from the date the amount would have been due until paid; and Franchisee shall, in addition, reimburse Franchisor for all costs and expenses connected with the inspection. These remedies shall be in addition to any other remedies Franchisor may have.

11. Training, Quality and Performance Standards.

11.1. Compliance with System/Reports. Franchisee shall comply with the Manuals and all other written policies provided to Franchisee by Franchisor. Franchisee shall not make any material changes to the operation or structure or facilities of the Food Service Counter(s) nor make any material replacement or alterations to equipment, fixtures, signs or decor without Franchisor's prior written consent. Franchisee shall submit to Franchisor such periodic reports, forms and records as Franchisor requests from time to time, including but not limited to, cleaning schedules, daily production reports, delivery logs, overnight rice cooling logs, pH logs, temperature logs and sushi cooling logs. Franchisee shall obtain and provide Franchisor an email address to which Franchisor may send written communications and sales reports to Franchisee.

11.2. Condition. Franchisee shall maintain the condition and appearance of the Food Service Counter(s) and all equipment consistent with Franchisor's standards. Franchisee shall maintain each Food Service Counter in a high level of cleanliness and first class appearance, including but not limited to, replacing worn or obsolete signs, fixtures, decor and equipment. Franchisee shall repair, at Franchisee's sole cost and expense, any equipment and/or worn or obsolete signs, fixtures and décor. If at any time in Franchisor's judgment the appearance of a Food Service Counter or equipment, fixtures, signs or decor does not meet Franchisor's standards, Franchisor shall have the right to notify Franchisee, specifying the corrective action to be taken by Franchisee. Franchisee shall correct the deficiency within 15 days after receipt of the notice, or such shorter period of time that Franchisor reasonably requests, provided that any deficiency that Franchisor believes could threaten public health or safety shall be corrected immediately.

11.3. No Other Purpose. Franchisee shall not conduct any business or activity from the location(s) of the Food Service Counter(s) other than the operation of the Food Service Counter according to the AFC System. All food items prepared at the Food Service Counter shall be sold at the Food Service Counter only and at no other location without the prior written consent of Franchisor. Under no circumstances are the premises of the Food Service Counter to be used for the preparation of food items to be sold other than on the premises, except Franchisee may prepare and deliver prepared foods to Self Service locations owned by Franchisee, if operated pursuant to an addendum to this Agreement.

11.4. Proprietary Products. Franchisor has developed and may continue to develop other proprietary food products, sauces and spices. To protect Franchisor's trade secrets and maintain quality control, Franchisor shall have the right to require Franchisee to purchase such proprietary items only from Franchisor or third parties that Franchisor designates.

11.5. Full Menu. Franchisee shall offer for sale and sell at the Food Service Counter(s) all food items that Franchisor authorizes from time to time; and shall not offer for sale or sell at the Food Service Counter(s) any other category of products. Franchisee shall have the right to offer additional prepared food items from time to time on a special or market test basis, provided that Franchisee shall notify Franchisor in writing at least 30 days in advance and shall comply with any request by Franchisor to refrain from offering any one or more such items.

11.6. New Products. From time to time, Franchisor may introduce new products, or reintroduce previously introduced new products. Franchisee shall purchase, maintain and display reasonable inventories of such new products for at least 120 days. Franchisor may require Franchisee to again purchase, maintain and display the products regardless of prior compliance with this section 11.6. Franchisee shall not introduce, offer or sell any new items that have not been approved by franchisor in writing.

11.7. Samples. Franchisee shall comply with sampling policies that Franchisor establishes from time to time. These may include requirements to provide free samples to customers and potential customers.

11.8. Preparation. To ensure that all items produced by Franchisee meet Franchisor's standards, and to protect Franchisor's goodwill and Marks, all food products shall be prepared only by properly trained personnel according to Franchisor's recipes, preparation techniques and processes as designated in the Manuals, and shall be sold only at retail to customers in conformity with Franchisor's marketing plan and concept.

11.9. Proposed Suppliers. If Franchisee proposes to offer at the Food Service Counter(s) any brand of product, or to use any item not then approved by Franchisor or to purchase from a supplier not then designated by Franchisor as an approved supplier, Franchisee shall first notify Franchisor and on Franchisor's request, submit samples and other information that Franchisor requires for examination and/or testing or to otherwise determine if the product, or proposed supplier meets Franchisor's specifications and

quality standards. Franchisee shall pay Franchisor a reasonable charge for the cost of inspection and evaluation, including a reasonable amount for Franchisor's costs of personnel to conduct the inspection and evaluation. Franchisor reserves the right to re-inspect facilities and products of any supplier and to revoke approval of any item that does not continue to meet Franchisor's standards. Franchisor reserves the right to approve any and all supplies, suppliers, brands and other products and services, whether currently approved or submitted for approval.

11.10. Suppliers. From time to time, Franchisor may provide Franchisee a list of approved products, brands, and/or suppliers for food products and other items necessary to operate the Food Service Counter(s), identifying manufacturers, brands, suppliers, transportation companies, and products and services that Franchisor has approved to be carried or used in the AFC System. Franchisor may revise the list from time to time. If Franchisee wishes to purchase a product or use a supplier not on the list, Franchisee shall submit Franchisee's request in writing to Franchisor before making any purchase and shall pay Franchisor's then current fees, costs and expenses to investigate the product or supplier. Franchisor is not under any obligation to approve the requested product or supplier and Franchisee shall comply with Franchisor's decision. Franchisor shall have the right to revoke any approval previously given.

11.11. Use of Approved Items. All goods and services used in operating the Food Service Counter(s) that are not specifically required to be purchased according to Franchisor's approved suppliers list, shall conform to specifications and standards that Franchisor establishes from time to time. Franchisee shall also comply with any source restrictions imposed by the facility owner to maintain quality control or an identifiable source for products in the event of product recalls.

11.12. Inventory. Franchisee shall always maintain an inventory of food and other products, materials and supplies to permit operation of the Food Service Counter(s) at maximum capacity.

11.13. Private Label. Franchisor may develop proprietary or private-labeled products for the Food Service Counter(s). To monitor the manufacture, packaging, processing and sale of these products Franchisor shall: (a) manufacture, supply and sell the proprietary or private labeled products to franchisees; and/or (b) disclose the designs or specifications of these products to a limited number of suppliers who Franchisor will authorize to make them to Franchisor's specifications and to sell them to franchisees. Franchisee acknowledges that Franchisee shall be required to purchase the proprietary or private labeled products from Franchisor, or from a limited number of suppliers designated by Franchisor.

11.14. Charges for Purchases. From time to time Franchisee may purchase food and other items from Franchisor or Franchisor's Affiliate. Franchisor shall have the right to charge, and Franchisee shall pay, freight, and other ancillary charges for such items, as well as Franchisor's and/or Franchisor's Affiliate's prices for such items. Franchisor shall have the right to deduct product purchases from payments owed to Franchisee.

11.15. Product Purchases.

(a) Franchisee shall reimburse Franchisor and/or Franchisor's Affiliate for product purchases from third party suppliers shipped to Franchisee on Franchisee's behalf.

(b) For Franchisee's convenience, Franchisor may ship routine shipments of products, including but not limited to, ingredients, product supplies and retail items, to Franchisee for use at the Food Service Counter(s). Franchisee may cancel such shipment(s) by providing Franchisor written notice of Franchisee's desire to do so at least one week prior to the scheduled delivery date.

11.16. Licenses. Franchisee shall obtain and maintain all required licenses, permits and certificates needed to operate the Food Service Counter(s) and provide copies of such licenses and permits to Franchisor. At Franchisor's election, Franchisor shall have the right, but no obligation, to obtain any required licenses and permits in Franchisee's name. Franchisee hereby grants Franchisor a power of attorney to apply for any required licenses, permits and any renewals of these for Franchisee's Food Service Counter(s). Franchisee shall reimburse Franchisor for any costs and fees incurred by Franchisor in applying for these licenses and/or permits on Franchisee's behalf. Franchisee shall operate the Food Service Counter(s) in full compliance with all applicable laws, ordinances and regulations, including but not limited to health, safety and sanitation laws.

11.17. Personal Involvement. Franchisee, or Franchisee's manager, or if Franchisee is an entity, Franchisee's principal owner (or such other person/manager), shall participate in day-to-day operation of the Food Service Counter(s), and shall directly supervise the operation of the Food Service Counter(s) and its employees. If Franchisee operates more than one location, then at least one trained employee with ServSafe Manager certification shall act as manager for those other locations. To assure Franchisor is aware of whom to contact in the event of Franchisee's absence, Franchisee shall provide to Franchisor a written list of every manager employed by Franchisee. Franchisee shall update and provide a revised manager list to Franchisor in writing within 24 hours of: (1) any new manager being hired; and/or (2) any manager leaving Franchisee's employment. Franchisee shall abide by lawful requests of the business owner or manager of the premises regarding any employee or prospective employee. Before start of employment, Franchisee shall train each manager and require each manager to sign a confidentiality and non-disclosure agreement in a form satisfactory to Franchisor requiring the manager to protect Franchisor's trade secrets and any other item Franchisor specifies in writing from time to time. Franchisee shall ensure each manager is trained before start of employment.

11.18. Uniforms. Franchisee shall purchase and Franchisee's employees shall at all times wear uniforms imprinted with the Marks and conforming to other specifications prescribed by Franchisor.

11.19. Computer and Software Requirements. Franchisee shall purchase a computer system meeting Franchisor's specifications with Internet connectivity capabilities to permit Franchisee to submit purchase orders online and to obtain information on new products, product specifications and other information Franchisor designates from time to time. Franchisee shall be solely responsible for the computer system, including maintaining and repairing it when necessary. Franchisor may require Franchisee to provide Franchisor independent access to the information generated or stored on Franchisee's computer system. Franchisee shall keep the computer system current. Franchisor may, in the future, develop or designate additional and/or alternate hardware and/or software for performing various functions for the Food Service Counter(s). Franchisee shall implement and use the hardware and software in operating the Food Service Counter(s) and comply with all standards prescribed by Franchisor regarding such hardware and software.

11.20. Tablet, Scale and Inventory Scanner. Franchisee shall purchase a tablet, scale, inventory scanner and printer ("Tablet System") meeting Franchisor's specifications with Internet connectivity capabilities to permit Franchisee to print labels, track daily products made at the Food Service Counter(s) and conduct other functions prescribed by Franchisor. Franchisee shall be solely responsible for the Tablet System, including maintaining and repairing it when necessary. If Franchisor repairs or replaces Franchisee's tablet, scale, labeling machine, or software, Franchisee shall pay Franchisor's then current repair or replacement charge for the items replaced. Franchisor may require Franchisee to upgrade and/or update the Tablet System and to provide Franchisor independent access to the information generated or stored on Franchisee's tablet, including inventory tracking logs. Franchisee shall keep the Tablet System current. Franchisor may, in the future, develop or designate computer application software for use with the Tablet System for performing various functions for the Food Service Counter(s). Franchisee shall purchase, implement and use the software in operating the Food Service Counter(s) and comply with all standards prescribed by Franchisor regarding the software, including upgrade and maintenance requirements.

11.21. Quality. Franchisee shall use only fresh ingredients and products of the highest quality, as determined by Franchisor in its reasonable discretion.

11.22. Operating Hours; Staffing. Franchisee or Franchisee's approved manager shall operate each Food Service Counter every day that the location where the Food Service Counter is located is open for business and subject to any additional requirements in any applicable Franchise Addendum attached to this Agreement. Franchisee shall ensure each Food Service Counter is adequately staffed and managed. In locations operated by a manager, Franchisee shall remain personally and actively involved in the Food Service Counter(s) operations and shall remain responsible for operating the Food Service Counter(s) and supervising employees. The personnel Franchisee retains to work at Franchisee's Food Service Counter(s) shall be Franchisee's agents and employees and Franchisor shall not be a joint employer of those persons. Franchisee alone shall determine who to retain, how many personnel to retain (subject to any minimum staffing requirements Franchisor may prescribe), compensation terms, employment terms and working conditions for Franchisee's personnel, and when and how to discipline or terminate the employment of Franchisee's personnel.

11.23. Store's Rules. Franchisee shall comply with the rules, policies and guidelines of the facility where the Food Service Counter(s) is/are located and sign any code of conduct or equivalent document required by the facility owner. If required by the facility owner, Franchisee shall obtain proof of employability for each prospective employee by completing the Department of Homeland Security's electronic employee verification system (E-Verify) before hiring.

11.24. Complaints. Franchisee shall promptly notify Franchisor in writing of any complaints from the owner(s) or manager(s) of the facility where any Food Service Counter is located, or from the public of problems relating to operation of the Food Service Counter or its products. Franchisee shall be primarily responsible to resolve and remedy all complaints to the satisfaction of the complaining person or entity.

11.25. Pricing. Franchisor may recommend resale prices or pricing schedules to Franchisee and may provide pricing labels conforming to these recommendations. Franchisee shall have the right to determine prices that Franchisee charges for products sold from the Food Service Counter(s). If Franchisee desires to charge a price or prices that differ from a price or price schedule recommended by Franchisor, then Franchisee shall pay or reimburse any additional reasonable costs that Franchisor incurs to prepare price labels containing the pricing determined by Franchisee. When allowed by law, Franchisor shall have the right to specify maximum and minimum prices for products sold at the Food Service Counter(s), and Franchisee shall abide by these specifications.

11.26 Initial Training. Franchisor shall provide Franchisee on one occasion, an initial training program in Franchisor's methods and techniques to prepare fresh sushi and/or other products and to operate a retail food service counter. If Franchisee is an entity, each of Franchisee's Principal Owners, shall be required to attend training. For this Section 11.26, the term "Principal Owner" shall mean any individual owning directly or indirectly thirty percent (30%) or more of Franchisee. The training program shall take place at Franchisor's headquarters, online or other location that Franchisor designates. The training program shall include classroom and on-the-job training and cover various aspects of the operation of a retail food service counter, with emphasis on techniques and examples used in the operation of food service counters bearing the Marks. Topics to be covered may include, but are not limited to legal compliance, sanitation, sushi and other food preparation and evaluation, steam table menu, cooking and evaluation (if applicable to the franchise), franchise management, including, basic accounting, operations, business insurance, inventory control, employee management, marketing, license and permitting requirements. Before the first day of the initial training program, Franchisee and Franchisee's manager shall also take and pass the ServSafe Manager

certification and the ServSafe Allergen Awareness Training provided online by ServSafe or Franchisor, at franchisee's own cost and expense. Franchisor shall have the right to reduce the scope of any training provided, if Franchisor, in its sole discretion, determines that Franchisee already has experience in these subjects. Each person attending Franchisor's training program(s) shall pay Franchisor's then current fee for this training. Franchisee shall be solely responsible for all travel and living expenses incurred for Franchisee, Franchisee's Principal Owners and other staff Franchisee elects to send to the training program. If Franchisee or any owner of Franchisee attending the training fails to complete the training to Franchisor's satisfaction, Franchisor may cancel this Agreement in Franchisor's sole judgment on written notice to Franchisee. There shall be no refunds of any sums paid to Franchisor if Franchisor cancels this Agreement under this Section 11.26. Franchisor reserves the right to waive the training requirement in Franchisor's absolute discretion where Franchisor is satisfied that Franchisee or Franchisee's principals have sufficient skill, knowledge and experience with both the operational requirements and Franchisor's prescribed and preferred procedures. Franchisor may also exempt Franchisee from some or all training (at Franchisor's sole discretion) if Franchisee or any affiliate of Franchisee already owns or operates a Food Service Counter or the Franchise Agreement is executed as a Renewal Franchise Agreement (as defined in Section 13.1). Franchisee acknowledges that all training is provided to protect the AFC System and the Marks and not to control the day-to-day of Franchisee's operations.

11.27 Post Opening Training. For Franchisee's initial location only, Franchisor shall provide Franchisee up to 3 days training at Franchisee's location. Franchisor shall not charge a fee for this post opening training. If Franchisee asks, or Franchisor decides that additional post opening training is needed, Franchisor shall have the right to charge its then current fee per additional day of training provided.

11.28. Additional Training. From time to time Franchisor may require Franchisee or Franchisee's manager to attend and satisfactorily complete additional training programs at Franchisor's headquarters, online or other location designated by Franchisor. Franchisor shall have the right to charge Franchisee Franchisor's then current fee for each person for whom Franchisor provides any additional training, even if that training was required by Franchisor. Franchisee shall be solely responsible for all travel and living expenses incurred to attend any training programs. If Franchisee fails to attend any mandatory additional training, Franchisor shall have the right to assess Franchisee a $250 penalty for the failure to attend. Franchisee acknowledges that all training is provided to protect the AFC System and the Marks and not to control the day-to-day of Franchisee's operations.

11.29 Mailing, Reproduction Costs and Handling Costs. Franchisor may charge Franchisee a reproduction, service and handling charge for written materials provided to Franchisee, such as manuals and marketing materials up to $100 per shipment.

11.30 Testing and Criminal Background Checks. Whenever requested by Franchisor or the facility owner where Franchisee is located, Franchisee shall require specified personnel (which may also include Franchisee), to undergo drug, tuberculosis and other chemical and disease testing and/or criminal background investigation. The foregoing obligations are subject to the condition that the request is lawful in the jurisdiction where the Franchisee and Franchisee's personnel are located. Franchisee shall pay all costs of the testing and investigation, complete all forms and consents, and take all other action needed to comply with such request. If Franchisee fails any required test or background check, Franchisor may cancel this Agreement on written notice to Franchisee. There shall be no refunds of any sums paid to Franchisor if Franchisor cancels this Agreement under this Section 11.30.

11.31 Operational Communications. Franchisee agrees to receive notices and other communications from Franchisor on operations, recalls and other emergency communications via all available means, including, but not limited to, telephone calls, text messages, emails, instant messaging and other then current modes of communication.

11.32 Franchisee's Demeanor. Franchisee shall at all times act professionally and respectfully in dealing with customers, clients, the facility's personnel and Franchisor's employees.

12. Risk Management.

12.1. Insurance. Franchisee shall obtain and maintain in effect all the following insurance coverage through insurance companies satisfactory to Franchisor for each location operated by Franchisee:

(a) Commercial General Liability coverage covering the premises and Franchisee's operations for bodily injury and property damage liability including contractual liability, personal injury and product liability coverage in amounts not less than $1,000,000 per occurrence and $2,000,000 aggregate;

(b) Worker's Compensation Insurance in statutory amounts as required in the state(s) where Franchisee's operations are conducted, including a Voluntary Worker's Compensation endorsement extending coverage to all employees exempted from coverage due to numerical employment requirements of the state;

(c) Employer's Liability Insurance with limits of $1,000,000 per occurrence;

(d) Unemployment Insurance covering Franchisee's employees;

(e) Property Insurance in an amount adequate to replace contents in the event of an insured loss;

(f) Business Income Insurance with limits adequate to insure profits and continuing business expenses for one year;

(g) State disability insurance for Franchisee's employees (as required by law); and

(h) Automobile liability insurance including coverage for autos owned, leased, hired or borrowed by Franchisee or Franchisee's owners, with limits of at least five hundred thousand dollars ($500,000) per occurrence of bodily injury and property damage combined, and any other or increased amounts of insurance that Franchisor may require from time to time for each vehicle used by Franchisee (whether principally or occasionally) in connection with the franchised business (for example, to drive to the franchised location(s), to deliver products to self service locations, or otherwise).

These coverages shall name Franchisor, Franchisor's parent and the facility owner where Franchisee operates as additional insureds (using such endorsements and endorsement forms approved by Franchisor); the additional insured must be primary and non-contributory; and the coverages must provide that Franchisor is entitled to receive at least 30 days prior written notice of any intent to reduce coverage or policy limits, cancel or otherwise amend the policy.

12.2. Changes. Franchisor shall have the right from time to time to establish and revise the minimum coverages, coverage amounts and required policy terms that Franchisee is required to obtain and maintain. Promptly after delivery of written notice to Franchisee of any revisions, Franchisee shall obtain and thereafter maintain insurance conforming to the revised requirements.

12.3. Proof. Franchisee shall provide Franchisor within 30 days of the date of this Agreement, certificates of insurance proving the coverages required above as well as a copy of Franchisee's insurance declaration pages with all endorsements. Franchisee shall deliver a complete copy of Franchisee's then prevailing insurance policies within 30 days after delivery of the certificates of insurance. Immediately on renewal or the purchase of replacement insurance, Franchisee shall deliver to Franchisor a certificate of insurance and declaration pages for the new or renewal policy.

12.4. Failure to Maintain. If Franchisee fails to purchase and maintain insurance required by Section 12.1 then Franchisor will have the right, but no obligation, to obtain that insurance through agents and insurers Franchisor chooses, or other insurance that Franchisor is able to obtain for such purpose. Franchisee shall, at Franchisor's election, pay all premiums for such insurance or reimburse premium payments made by Franchisor. Franchisor will also have the right to offset the amounts of those premiums against any amounts due from Franchisor to Franchisee. Franchisee hereby grants Franchisor a power of attorney to obtain any required insurance and any renewals thereof on Franchisee's behalf.

12.5. Insurance Disclaimer. Franchisor has no obligation to obtain or maintain any insurance for or on behalf of Franchisee.

12.6. Indemnity. Franchisee shall defend, indemnify and hold harmless Franchisor, Franchisor's affiliated entities, and the owner(s) and lessee(s) of the location(s) where the Food Service Counter(s) is/are located, and each of their respective members, shareholders, managers, partners, directors, officers, employees, agents, and representatives and other personnel (collectively "Indemnified Parties") from all losses, costs and expenses incurred in connection with any claim, action, suit or other proceeding or government demand (including any state and/or federal agency imposed charges, fines, penalties and taxes), based on actual or alleged acts or omissions of Franchisee, Franchisee's personnel, or others, arising from or related to the operation of the Food Service Counter(s). Franchisee shall also defend, indemnify and hold harmless the Indemnified Parties from any liability or claims by Franchisee's employees against the Indemnified Parties for wage and hour and/or other labor and employment law violations arising from such employees' employment or work at the Food Service Counter(s).

12.7. Disclaimers. The parties acknowledge that this Agreement pertains to establishing and operating food service counter(s) where Franchisee will make prepared food products for sale to the public; and is not a vending machine, rack, display case or amusement machine business.

13. Renewal.

13.1. Renewal. If Franchisee fully complied with all conditions to renewal in Sections 13.2 through 13.3, and if this Agreement has not previously terminated, then Franchisee shall have the right, but no obligation, on expiration of this Agreement, to enter into a renewal Franchise Agreement (the "Renewal Agreement") for one consecutive term of five years (the "Renewal Term"). Each of the conditions stated in Sections 13.2 through 13.3 shall be conditions precedent to Franchisee's right to enter into a Renewal Agreement.

13.2. Conditions to Renewal. As conditions to the right to enter into a Renewal Agreement, Franchisee shall have (a) complied with all provisions of this Agreement and any applicable Addendum during its entire term, including the time when Franchisee gives notice of intent to renew; (b) the ability to maintain possession of all Food Service Counter locations operated by Franchisee under this Agreement; (c) brought the Food Service Counter(s) into full compliance with the specifications and standards then applicable for new or renewing Zenshi/AFC/Wild Blue Food Service Counters; (d) given written notice of renewal to Franchisor as provided in Section 13.3; (e) signed Franchisor's then-current form of Franchise Agreement and applicable addendum(s) at least 30 days before the expiration date (with appropriate modifications to reflect the fact that the Franchise Agreement relates to the grant of a renewal franchise), and that agreement shall supersede this Agreement. The terms of that Agreement may differ materially from the terms in this Agreement including, without limitation, different payment amounts or arrangements; (f) complied with Franchisor's then-current qualifications and training requirements; and (g) paid a non-refundable renewal fee in the amount of Six Thousand two hundred fifty Dollars ($6,250) for each location to be renewed. Franchisee's failure to provide the notice in Section 13.3 or otherwise comply with each obligation under this Section 13.2 by the applicable deadline shall be deemed Franchisee's desire not to renew this Agreement.

13.3. Notice. If Franchisee desires to enter into a Renewal Agreement, then before expiration of this Agreement, Franchisee shall give Franchisor written notice of its desire at least 180 days but not more than 360 days prior to the expiration of the initial term of this Agreement. Renewal shall also be conditioned on Franchisee's compliance with this Agreement through termination of the initial term and Franchisee retaining all Food Service Counter locations operated by Franchisee under this Agreement.

13.4 Month-to-Month. If Franchisee does not sign Franchisor's then-current Franchise Agreement prior to the expiration date and Franchisee continues to accept the benefits of this Agreement after it expires, then at Franchisor's option, this Agreement may be treated either as (i) expired as of the expiration date with Franchisee then operating without a license to do so and in violation of Franchisor's rights; or (ii) continued on a month-to-month basis ("Month-to-Month Agreement") until one party provides the other with written notice of such party's intent to terminate the Month-to-Month Agreement, in which case the Month-to-Month Agreement will terminate thirty (30) days after receipt of the notice to terminate the Month-to-Month Agreement, or such longer notice period as is required by Applicable Law. In the latter case, all of Franchisee's obligations shall remain in full force and effect during the Month-to-Month Agreement as if this Agreement had not expired, and all obligations and restrictions imposed on Franchisee upon expiration of this Agreement shall be deemed to take effect upon termination of the Month-to-Month Agreement.

14. Transfer Restrictions.

14.1. Assignment by Franchisor. Franchisor shall have the right to transfer or assign any or all rights and obligations under this Agreement in whole or in part, on one or more occasions, to any person, corporation or other entity.

14.2. Assignment by Franchisee. Franchisee acknowledges that Franchisor entered into this Agreement and each Franchise Addendum in reliance on characteristics personal to Franchisee, Franchisee's principal owners and officers, and personal to the entity constituting Franchisee. Therefore, Franchisee shall have no right or power to, and shall not purport to sell, transfer, assign, sublicense, give, mortgage, pledge or encumber any interest in this Agreement, in any Franchise Addendum, in the business contemplated by this Agreement, or if Franchisee is an entity, a majority of the shares of stock or ownership interests in that entity (collectively, "Transfer"), without the prior written consent of Franchisor. Franchisor shall have the right to withhold consent to any sale or transfer proposed to be entered into within 2 years of the date of the applicable addendum for the location proposed to be sold or transferred. Franchisor shall also have the right to withhold approval to any proposed sale or transfer, at Franchisor's discretion, if such sale or transfer involves the sale/transfer of some but not all of Franchisee's locations operated under this Agreement.

14.3. Entity Documents. If Franchisee or any assignee of Franchisee is an entity, then Franchisee and the assignee shall provide Franchisor a copy of its charter documents (operating agreement, regulations, articles of incorporation; partnership agreement, bylaws; and other governing documents designated by Franchisor), list of owners including the ownership interest of each, managers, directors and officers, all amendments to these documents, and all other information about the organization, structure and personnel that Franchisor requests from time to time. Franchisee shall promptly notify Franchisor in writing of any change in any information provided under this Section 14.3.

14.4 Notice of Restrictions. Franchisee shall place on the face of each certificate, agreement and other instrument evidencing ownership of the entity constituting Franchisee, the following statement in conspicuous typeface:

> The transfer of the interest in [name of Franchisee] evidenced by this certificate [or instrument] is subject to the terms of a Franchise Agreement with Advanced Fresh Concepts Franchise Corp. dated [state date of this Agreement]. Any purported transfer made without complying with those terms is void and of no effect.

14.5 Transfer to Entity. Franchisor will not unreasonably withhold consent to a written request by Franchisee to transfer/assign Franchisee's interest in this Agreement to a corporation, limited liability company or equivalent entity, provided that Franchisee satisfies all the following conditions precedent: (a) the entity is newly organized and its activities will be limited to acting as an AFC franchisee; (b) the entity's name shall not include the words "Zenshi," "AFC," "Advanced Fresh Concepts," "Wild Blue," "Southern Tsunami," "Hybrid Sushi" or any variant, or words confusingly similar thereto without Franchisor's prior written consent; (c) Franchisee shall be the sole owner of at least 51% of the ownership of the entity and any remaining ownership is owned only by Franchisee's spouse or children; (d) if Franchisee is two or more individuals, then each owns the same percentage of the entity as his or her interest in the business prior to the transfer/assignment; (e) the entity's articles of incorporation, articles of organization and bylaws state that the issuance and transfer of any interest in the entity are restricted by this Agreement; (f) all the entity's ownership certificates provide the notice stated in Section 14.4; and (g) Franchisee pays Franchisor's then current transfer to entity fee. A transfer/assignment made pursuant to this Section 14.5 shall not be subject to Franchisor's rights of first refusal in Section 14.6 of this Agreement.

14.6. Right of First Refusal. Franchisor shall have a right of first refusal itself to accept the terms of any sale, transfer or assignment of any interest in any Food Service Counter operated by Franchisee, this Agreement or in Franchisee, offered by Franchisee or offered to and proposed to be accepted by Franchisee, whether voluntarily, by operation of law or otherwise. If Franchisor exercises the right of first refusal, then Franchisor will also have the right but no obligation to substitute cash for any form of payment proposed in the offer; and will have 60 days after notifying Franchisee of its election to exercise the right of first refusal to prepare for closing. If a proposed transaction would involve more than 20% of the stock or other ownership interest of Franchisee then Franchisor will also have the right, but no obligation, to purchase not only the interest involved but also all the remaining interests, to acquire up to 100% of the interest in Franchisee, at a price proportionate to the price of the interests initially involved. If Franchisor exercises the right of first refusal, then at Franchisor's request, Franchisee shall also take all action necessary to cause the lease for the location(s) affected, and any other agreements designated by Franchisor, to be assigned to Franchisor.

14.7. Exercise of First Refusal. To provide Franchisor the opportunity to exercise the right of first refusal, Franchisee shall deliver to Franchisor a written notice stating all the terms of any proposed sale, transfer or assignment covered by the right of first refusal and shall provide any additional information that Franchisor requests about the proposed transaction. Franchisee shall require its owners to provide Franchisee sufficient information to enable Franchisee to comply with this obligation with regard to a transaction proposed by any of the owners of Franchisee. Within 45 days after Franchisor receives the notice and the additional information requested by Franchisor, Franchisor will notify Franchisee whether Franchisor accepts for itself or its nominee the terms in the notice.

14.8. Waiver. If Franchisor elects not to exercise the right of first refusal and consents to the proposed sale, assignment or transfer, then Franchisee will be authorized to complete the proposed transaction with the proposed assignee on the terms in the original notice to Franchisor. Any change to the terms constitutes a new proposal which again requires compliance with the procedures in Sections 14.6 through 14.7 (and this Section 14.8, if applicable). Franchisor's election not to exercise the right of first refusal for any proposed transaction does not affect Franchisor's right of first refusal for any other transaction and does not constitute approval of the proposed transferee or assignee or of the transaction. Franchisee and any proposed transferee or assignee shall comply with all provisions in this Agreement relating to transfer and assignment.

14.9. Sale To Third Party. If Franchisor elects not to exercise the right of first refusal, then Franchisor's consent to a proposed sale, transfer and/or assignment by Franchisee shall not be unreasonably withheld. It shall be deemed to be reasonable for Franchisor to require, as conditions precedent to consenting

to the proposed sale, transfer and/or assignment, among other requirements, that (a) Franchisee first comply with the right of first refusal provisions in Sections 14.6 through 14.7; (b) the proposed transferee/assignee apply to Franchisor to become a franchisee; provide information that Franchisor requests to assess the proposed transferee's/assignee's skills, qualifications, integrity, honesty and resources (financial and otherwise) sufficient in Franchisor's judgment to operate the Food Service Counter(s) in a manner that Franchisor expects to be satisfactory; (c) the proposed transferee/assignee cooperates in arranging one or more personal interviews at times and places designated by Franchisor; (d) consent is obtained, of the owner(s) of the location(s) where the Food Service Counter(s) is/are located if such owner(s) has/have the right to consent pursuant to an agreement with such owner; (e) the proposed transferee/assignee attends and successfully completes Franchisor's initial training program and any other training Franchisor requires, all at the proposed transferee's/assignee's expense; (f) at Franchisor's option, the proposed transferee/assignee, either: (i) signs Franchisor's then current form of Franchise Agreement, modified to delete any initial fee, and to expire on the expiration date of this Agreement or (ii) signs Franchisor's then current form of Franchise Agreement for a full term and pays Franchisor's then current initial franchise fee; (g) Franchisee pays all moneys owed to Franchisor and to any affiliated entities of Franchisor and in addition pays Franchisor a transfer fee of $1,500 for each location to be transferred; (h) Franchisee and the principal owners of Franchisee execute a general release in a form satisfactory to Franchisor of all claims against Franchisor, its owners, directors, officers, members, managers and employees; (i) Franchisee agrees not to retain any security interest in any assets of the franchise or business following the transfer; (j) that the terms of the sale and/or assignment not be unduly burdensome to the transferee/assignee in Franchisor's judgment; and (k) that the sale, transfer and/or assignment close within 90 days of Franchisor's election not to exercise the right of first refusal.

14.10. Transfer On Death or Incapacity. If Franchisee is an individual who dies, or becomes permanently incapacitated, then Franchisor shall allow the deceased's surviving spouse, heirs, or estate or the incapacitated person's legal representative, the opportunity to participate in ownership of Franchisee during 180 days after the death or incapacity, provided that during that time the surviving spouse, heirs or estate or legal representative (a) maintains all standards of the franchise, performs all obligations of Franchisee and satisfies all then current qualifications for a purchaser of a franchise or, (b) in accordance with the requirements of Sections 14.2 and 14.6 through 14.9 sells that person's ownership interest in Franchisee and the Food Service Counter(s) to a person who satisfies Franchisor's then current standards for new franchisees.

14.11. Death or Incapacity of Individual Affiliated with Entity. If Franchisee is an entity, then the death or incapacity of a shareholder, owner, director, manager, officer or partner of Franchisee shall not constitute an assignment or transfer of this Agreement under Section 14.2, provided that during 180 days after the death or incapacity the surviving spouse, heirs or estate or the incapacitated person's legal representative (a) maintains all standards of the franchise, performs all obligations of Franchisee and satisfies all then current qualifications for a purchaser of a franchise or, (b) in accordance with the requirements of Sections 14.2 and 14.6 through 14.9 sells that person's ownership interest in Franchisee and the Food Service Counter(s) to a person who satisfies Franchisor's then current standards for new franchisees.

14.12. Operation by Franchisor. From the date of death or incapacity until satisfied that a qualified and trained individual assumed full-time operational supervision of the Food Service Counter(s), Franchisor shall have the right, but no obligation, to enter and operate the Food Service Counter(s). Any decision by Franchisor to do so shall be deemed to be an accommodation to assist Franchisee. Franchisor makes no representation or warranty regarding its ability to operate the Food Service Counter(s) profitably, and Franchisor shall not be responsible for results of operation. Franchisee shall reimburse all Franchisor's expenses incurred to operate the Food Service Counter(s) pursuant to this Section 14.12, including but not limited to travel, lodging, meals, and personnel compensation; and shall pay Franchisor, in addition to all other amounts provided for in this Agreement, a management fee of up to $500 per day per person

Franchisor sends for the period of operation by Franchisor. Franchisor shall have the right to increase this daily rate effective on delivery of written notice to Franchisee. Franchisor shall have the right to cause itself to be paid and reimbursed any or all these amounts from revenues of the Food Service Counter(s), as well as all other amounts required to be paid under this Agreement.

14.13. Operation for Cause. If Franchisor determines that operation of the Food Service Counter(s) may be in jeopardy or if a default occurs, then in addition to all Franchisor's other rights and remedies, Franchisor shall have the right to operate the Food Service Counter(s) in the manner and on the terms provided in Section 14.12, for as long as Franchisor believes necessary or practical.

15. Default and Termination.

15.1. Immediate Termination Without Opportunity to Cure. Franchisee shall be deemed to be in default and Franchisor shall have the right to terminate this Agreement and/or any applicable addendum, without allowing Franchisee any opportunity to cure the default, effective immediately on delivery to Franchisee of written notice of termination, on the occurrence of any of the following events:

A. Franchisee is adjudicated bankrupt or insolvent or any substantial part of Franchisee's assets is assigned to or for the benefit of any creditor, or a petition in bankruptcy is filed by or against Franchisee and not immediately contested and dismissed within 60 days after filing, or a bill in equity or other proceeding for appointment of a receiver or other custodian of Franchisee or any assets of Franchisee is filed and consented to by Franchisee, or a court appoints a receiver or other temporary or permanent custodian of all or part of Franchisee's assets, or proceedings for a composition or arrangement with creditors under any federal or state law are instituted by or against Franchisee;

B. Franchisee is voluntarily or involuntarily dissolved;

C. Execution is levied against Franchisee or any real or personal property of Franchisee is sold after levy by a government body or official.

D. Franchisee stops operating or abandons the franchise by failing to operate at any Food Service Counter for three (3) consecutive days when Franchisee is required to operate, or any shorter period of time in which it is reasonable in the circumstances for Franchisor to conclude that Franchisee does not intend to continue to operate the Food Service Counter(s).

E. Any material complaint or subjective dissatisfaction expressed by the owner(s) or managers of the facility where any Food Service Counter operated by Franchisee is located, regardless of the reason for such complaint or subjective dissatisfaction; or the owner(s) or managers of the facility object for any reason to the continued operation of the Food Service Counter at the facility.

F. Franchisee (or, if Franchisee is an entity, any owner, member, partner, director, manager or officer of Franchisee) is convicted of or pleads no contest to a felony, fraud, crime involving moral turpitude, or other crime or offense which Franchisor reasonably believes is related to Franchisee's operation of the Food Service Counter(s) or is likely to have an adverse effect on the AFC System, the Marks or the goodwill associated with the Marks.

G. Franchisor determines that a threat or danger to public health or safety may result from Franchisee's continued operation of any Food Service Counter and/or Franchisee fails to cure any health and safety violation within 24 hours after notice of the violation.

H. Franchisee engages in any unlawful act, form of harassment or discrimination.

I. Franchisee (or, if Franchisee is an entity, any owner, member, partner, director, manager, or officer of Franchisee) purports to transfer any rights or obligations under this Agreement or any interest in Franchisee or any Food Service Counter operated by Franchisee, or any security interest, to any third party in violation of any terms or without satisfying any of the conditions within Sections 14.2 through 14.11.

J. There occurs any breach of any of the covenants in Sections 5.3, 6.1 through 6.4 or 14.2 through 14.11.

K. Franchisee makes any material misrepresentations relating to the acquisition of the franchise or engages in conduct which reflects materially and unfavorably on the operation and reputation of the franchise or franchise system.

L. Franchisor discovers that Franchisee knowingly or with reckless disregard maintained false books or records, or submitted a false report to Franchisor; intentionally concealed revenues; attempted to defraud Franchisor; misdirected or appropriated for Franchisee's own use any funds withheld from wages of employees; failed to properly withhold taxes, FICA, insurance or other benefits from employee wages; appropriated for Franchisee's own use any funds or other property of Franchisor; or knowingly permitted or, having discovered the facts, failed to take action against or discharge any employee who embezzled funds or other property of any customer of Franchisor, or anyone else.

M. Franchisee interferes or attempts to interfere with Franchisor's contractual relations with any third party, including but not limited to other franchisees, or interferes or attempts to interfere with Franchisor's ability or right to grant franchises or licenses to others to use the Marks or AFC System.

N. Franchisee repeatedly fails to comply with one or more provisions of this Agreement, whether or not cured after notice.

O. Franchisee fails to cure any default under this Agreement that materially impairs the goodwill associated with the Marks within 48 hours after delivery of written notice to cure;

P. Franchisee fails to satisfactorily complete initial training in Franchisor's sole judgment or to pass any required criminal background check and/or drug, tuberculosis or other chemical and disease testing;

Q. Any act of dishonesty or moral turpitude, either in Franchisee's operations, or in dealings with the facility owner where Franchisee's Food Service Counter(s) is/are located or in Franchisee's interactions with Franchisor.

15.2. Termination After Notice and Opportunity to Cure. Except as stated in Section 15.1, Franchisee shall have 15 calendar days after delivery by Franchisor of written notice to cure the breach or default under this Agreement and/or any applicable addendum, or if it cannot be cured in that time, to take within that time, and continue, all available steps to cure and to provide proof of those steps to Franchisor. Failure to cure in this time, or within this time to take and continue all available steps to cure, shall at Franchisor's election, result in termination of this Agreement and/or the applicable Franchise Addendum, effective on expiration of the period allowed for cure as specified in the notice of default. However, if applicable law requires Franchisor to allow a larger period of time, then Franchisee shall have the period of time required by law to cure the breach or default.

15.3 Cross Default. Franchisee's breach of one agreement/addendum with Franchisor shall, at Franchisor's election also constitute a breach of every other agreement/addendum between Franchisee and Franchisor. A breach by franchisee of this Agreement shall also constitute, at Franchisor's election, a breach of all other agreements/addendums between Franchisee and Franchisor. Franchisor's election to enforce or not enforce this provision shall not constitute a waiver of any of Franchisor's rights or remedies against Franchisee hereunder.

15.4 Acts of Others. Franchisee shall be responsible for all acts and/or omissions of Franchisee's employees, managers, independent contractors and family members, regardless of whether Franchisee had actual notice of such actions/omissions.

15.5. Notice Required By Law. If any applicable law or regulation limits Franchisor's right to terminate this Agreement or requires greater notice or time to cure than stated in this Agreement, then Franchisor may allow additional time to conform to the minimum notice or cure period or restriction on termination required by that law or regulation. This Section 15.5 does not waive any right of Franchisor to challenge the validity or application of such law or regulation.

15.6. Effects of Termination or Expiration. On termination or expiration of this Agreement without renewal, Franchisee shall do all of the following:

A. Immediately pay all amounts due and owing to Franchisor and all sums due and owing to any third party relating to the operation of each of Franchisee's Food Service Counter(s);

B. Immediately stop using the Marks, and permanently refrain from doing business using any name or in any way that could tend to give the public the impression that Franchisee is or previously was operating a Food Service Counter associated with Franchisor; and refrain from using, in any manner, or for any purpose, any confidential information or trade secrets of Franchisor;

C. Immediately take all action needed to cancel any assumed name or equivalent registration pertaining to the Food Service Counter(s);

D. Revise all websites and social media pages controlled by Franchisee to remove references to the Food Service Counter(s) and Franchisor's Marks and System; and at Franchisor's request, assign to Franchisor all Internet domain names and social media accounts owned by Franchisee relating to the Food Service Counter(s).

E. Pay Franchisor all expenses incurred by Franchisor as a result of any breach or default by Franchisee, including, but not limited to, expenses Franchisor incurs on account of travel, lodging, meals, personnel compensation and operational costs;

F. At Franchisor's request, assign to Franchisor all of Franchisee's possessory interest in the Food Service Counter(s) operated by Franchisee; vacate the premises and provide all necessary assistance to enable Franchisor to take possession thereof;

G. Immediately return to or, as applicable, deliver to Franchisor the Manuals, all customer lists, all promotion material, all materials, signs and related items bearing the Marks; all forms and other materials or property of Franchisor, and any copies of these, in Franchisee's possession or control. Franchisee shall also return to the facility owner, all property of the facility owner including, but not limited to, the facility owner's manuals, equipment, assets and any other items owned by the facility owner in Franchisee's possession;

H. Assign to Franchisor or its designee, all right, title and interest in and to the phone numbers of the Food Service Counter(s), notify the phone company and all listing agencies that Franchisee's right to use the phone numbers ended, and authorize the transfer of the phone numbers to Franchisor or its designee;

I. Cooperate with Franchisor in providing records of the Food Service Counter(s) and disclosing all other pertinent information;

J. Sign all documents which Franchisor may reasonably require to evidence and further accomplish termination of this Agreement and of Franchisee's rights to use the Marks and AFC System; and

K. Refrain from destroying, damaging, hiding or taking any equipment or inventory from the Food Service Counter(s) without Franchisor's written consent.

15.7 Option to Purchase. On termination or expiration of this Agreement, Franchisor shall have the option (but not the obligation), exercisable by delivering notice to Franchisee during the thirty (30) days following termination or expiration, to purchase the Assets of the Food Service Counter(s). For this Section 15.7, "Assets" means equipment, supplies, signage and non-perishable inventory.

A. The purchase price for the Assets will be the fair market value as reasonably determined by Franchisor. Any amounts Franchisee owes to Franchisor or its affiliates shall be applied to reduce the purchase price.

B. The balance of the purchase price, after the deductions in Section 15.7(A), shall be payable by Franchisor to Franchisee, at the closing. The closing shall occur at a date stated by Franchisor in the notice to Franchisee of Franchisor's exercise of the purchase option. That date shall be no later than 30 days after delivery of the notice, provided that the date may be later as reasonably determined by Franchisor to allow time for compliance with bulk sales laws. At closing, the parties shall execute and deliver all documents necessary to vest title in the purchased assets in Franchisor, free and clear of liens and encumbrances. Franchisee shall provide Franchisor with all information necessary to close the transaction.

C. Franchisor shall also have the right (but not the obligation) to purchase non-expired approved perishable inventory at Franchisee's Food Service Counter(s) at the time of expiration or termination of this Agreement. The purchase price for the non-expired approved perishable inventory will be the product cost paid by franchisee to acquire these products from Franchisor or Franchisor's approved suppliers. Any amounts Franchisee owes to Franchisor or its affiliates shall be applied to reduce the purchase price.

15.8 Continuing Effect. All provisions which by their terms or nature survive expiration or termination of this Agreement shall continue in effect regardless of expiration or termination until fully performed or until they expire by their nature.

16. Additional Provisions.

16.1. Compliance With Law. Franchisee shall operate the Food Service Counter(s) in compliance with all applicable laws, rules and regulations of all government authorities, including but not limited to federal and state laws pertaining to wages, hours, working conditions, unlawful discrimination, employment verification, record keeping, workers compensation, leaves of absence, restrictions on employment of minors and other labor laws, social security and unemployment insurance contribution requirements, disability insurance, income tax and other withholdings, contributions, deposits and reporting as well as federal and state laws on operating a restaurant, health, safety and sanitation laws which also include health department inspections, menu and menu board labeling laws, food labeling laws, the Hazard Analysis and Critical Control Point ("HACCP") food safety program adopted by the U.S. Food & Drug Administration and rules on handling, preparing and serving foods by people with communicable or infectious diseases.

16.2. Interpretation. Headings and section numbers in this Agreement are for convenience only and are not part of this Agreement. References to the owner or lessee of the premises where a Food Service Counter is located also include the applicable operator with whom Franchisor has arrangements that permit the establishment of the franchise granted by this Agreement. The provisions of this Agreement shall be interpreted according to their fair meanings and not strictly for or against any party.

16.3. Entire Agreement. This Agreement is the entire agreement of the parties. All prior written agreements, discussions, negotiations, representations and understandings of the parties are merged into and superseded by this Agreement. Nothing in this Agreement is intended to disclaim the representations made to Franchisee in the Franchise Disclosure Document.

16.4. Amendment. No modification of this Agreement will be valid unless executed in writing and signed by both parties. This provision shall not restrict updates and revisions to the Manuals.

16.5. Relationship of the Parties. The parties shall be independent contractors and not partners, joint venturers, principal-agent, employer-employee, or other relationship with each other. Franchisee shall have no authority or power to and shall not purport to obligate Franchisor to any person or entity. In all public records, letterhead and on signage at the Food Service Counter, Franchisee shall indicate its independent ownership of the franchised business and that the Food Service Counter is independently owned and operated. Franchisee shall not interfere with or disrupt Franchisor's relationship with the owner(s) or lessee(s) of the premises where the Food Service Counter(s) is/are located, and shall not communicate with such owner(s) or lessee(s) concerning the relationship with Franchisor or any other matter not involving regular day to day operations of the Food Service Counter(s), without first obtaining Franchisor's written consent. By way of example, and not limitation, Franchisee shall not communicate with the facility owner or its agents about pricing, menu changes, new concepts or other types of business opportunities involving the facility owner or otherwise. Franchisee shall never represent himself/ herself as an agent or employee of Advanced Fresh Concepts Franchise Corp. or Advanced Fresh Concepts Corp. Any complaint, petition and/or application that takes a position inconsistent with this Section, or other claim filed in violation of this Section shall be deemed a material breach of this Agreement.

16.6. No Waiver. Waiver of any breach or default on any occasion shall not constitute a waiver of any other or future breach or default.

16.7. Governing Law. This Agreement takes effect upon its acceptance and execution by Franchisor in California. This agreement shall be governed by and interpreted and construed according to the internal laws of California without regard for its principles of conflicts of law. However, (a) if a provision of this Agreement would not be enforceable under California law, and (b) if the Food Service Counter is located outside California; and (c) such provision would be enforceable under the laws of the state where the Food Service Counter is located; then such provision shall be interpreted and construed under the laws of the state where the Food Service Counter(s) is/are located. Where a California statute or rule of law provides that such statute or rule is inapplicable outside the state, for example, to a franchise located outside of California, or is inapplicable for another reason, such as an exemption, such law or rule shall not apply to Franchisee if located outside of California or if the circumstances of inapplicability apply. Nothing in this Section 16.7 is intended to subject this Agreement to any franchise or similar law, rule, or regulation of any state to which it would not otherwise be subject.

16.8. Arbitration

A. Scope Of Arbitration: Any dispute that arises out of or relates directly or indirectly to this Agreement, including, without limitation, any claimed breach of this Agreement or any claim that any part of this Agreement (including this Section 16.8 or any part thereof) is invalid, illegal, unenforceable,

voidable or void, or the relationship of the parties hereto shall be resolved by arbitration in accordance with the Commercial Arbitration Rules of the American Arbitration Association, as amended (the "Rules" - available upon request and at www.adr.org), except as provided for otherwise in paragraph I below. Sections 1281.4 and 1283.05 of the California Code of Civil Procedure are, by this reference, incorporated in and made a part of this Agreement and shall apply in connection with any arbitration under this Section 16.8. In the event the terms of this Agreement, (including Section 16.8), the Rules or any applicable arbitration statute differ or conflict with each other, the terms of this Agreement shall control over the Rules and the arbitration statute, and the Rules shall control over the arbitration statute. This arbitration provision shall be self-executing, and shall remain in effect after and regardless of expiration or termination of this Agreement.

B. Number Of Arbitrators: Should at any point the alleged damages exceed $1,000,000 in total, exclusive of alleged interest, costs and/or attorney's fees, the dispute shall be heard and determined by a panel of three arbitrators. For all disputes, at least one arbitrator shall be a practicing attorney that specializes in franchise law.

C. Independent Arbitrations: The parties intend any dispute to be resolved as an independent arbitration, which is neither consolidated, classed, nor certified with any other claimant, arbitration or dispute. The parties waive all rights to resolving any dispute as consolidated, classed or certified with any other claimant, arbitration or dispute.

D. Location Of Arbitration: Arbitration shall occur in Los Angeles, California.

E. Discovery: After the appointment of the arbitrator(s), each side may commence discovery. Each side shall be limited to the following discovery: (a) no more than five (5) depositions of potential witnesses; (b) one set of written interrogatories; (c) one set of requests for production; and (d) one set of requests for admission. The aforementioned forms of written discovery shall not include more than 25 questions or requests within each set. The arbitrator(s) may permit requests for additional discovery for good cause. All objections are preserved for the arbitration hearing, except for objections based on privilege or proprietary/confidential information. All discovery shall be completed within eight months after the selection of the arbitrator(s), unless this period of time is shortened or extended by the arbitrator(s) for good cause or by stipulation of the parties.

F. Law And Motion: The arbitrator(s) shall set a briefing schedule, which sets a law and motion hearing date and the submission deadline for opposition and reply memoranda, no later than five days after the submission of any law and motion. The law and motion hearing date shall in no case be set more than 30 days after the original submission of any law and motion. Law and motion matters shall be decided, and a reasoned ruling issued as soon as practical, but in no case later than 15 business days after the scheduled law and motion hearing. Nothing in this subsection prevents any party from requesting ex parte relief as permitted by California law.

G. Pre-Award Costs of Arbitration: Administrative fees for operative arbitration demands shall be paid by the party filing the demand. Arbitrator fees/deposits and all costs for transcripts shall be allocated equally between each side. Unless accommodated otherwise by the alternative dispute resolution center and/or the Rules, any party's failure to pay its portion of the fees and costs for the arbitration within the due dates set by the alternative dispute center shall result in the immediate suspension of the arbitration. In the event a suspension for non-payment of arbitration fees and costs continues for 30 days, the alternative dispute resolution center shall either enter the default of the non-paying party or the arbitration shall be dismissed. At the conclusion of the arbitration proceeding, the arbitrator(s) shall award the prevailing party the prevailing party's costs for the arbitration pursuant to Section 16.8(J).

H. Awards: All awards, including, without limitation, an interim or partial award, by the arbitrator(s) regarding the merits of the dispute shall be articulated in writing, signed by the arbitrator or a majority of the arbitrators (if applicable) and include a statement setting forth the reasons for the decision (a "reasoned award"). All awards shall be based on established law and shall not be made on broad principles of justice and equity. An award may be appealed to a court of competent jurisdiction for any errors of law, errors of legal reasoning or determination of fact that are clearly erroneous. Judgment on the final award may be entered in any court with competent jurisdiction. Except as otherwise provided in Section 16.8, an award may be entered against any party that fails to appear, defend, advance, attend, participate in, prosecute or obtain a postponement after being afforded due notice of the arbitration.

I. Injunctive/Provisional Remedies: Nothing in Section 16.8 or elsewhere in this Agreement limits a party's rights or remedies in connection with any action in any court of competent jurisdiction for injunctive or other provisional relief that a party deems necessary or appropriate to compel the other party to comply with the party's obligations under this Agreement, to protect the trade secrets or other intellectual property of a party against disclosure, or to prevent any threatened conduct that may cause loss or damage to a party under rules of equity, pending completion of arbitration. The parties agree that any failure to immediately cease operation, vacate the location of the operation or cease the use of intellectual property will cause irreparable injury and that money damages will not provide an adequate remedy. Both parties therefore consent to the issuance of an appropriate injunction.

J. Fees And Costs: The arbitrator(s) shall award to the prevailing party(ies)their fees and costs that were both incurred and relate directly to the claims allowing for an award of fees and costs. The arbitrator(s) shall consider the results of the entire arbitration and all claims filed, whether based in contract, statute or otherwise, in determining whether there is a prevailing party. The arbitrator(s) shall deny any motion/petition for fees that is not supported by a verified and detailed account of the time and expenses incurred. An award of fees and costs for all claims, including, without limitation, those based on a breach of this Agreement or for claims based on statute, may not exceed either: (a) in the event of a money award, one third the amount of compensatory damages awarded; or (b) in the event of a defense award, one third the greatest total amount claimed as damages at any point during the arbitration, including, without limitation, within any writing, testimony or argument. "Fees and costs" mean all reasonable expenses of the arbitration, including all administrative fees, arbitrator fees, travel expenses, out of pocket expenses, such as copying and telephone, court costs, legal research costs, discovery costs, expert witness fees, and attorney's fees. Except as otherwise provided above, a court of competent jurisdiction shall award fees and costs to the party that prevails on either a motion/petition for injunctive relief, as provided for in paragraph I above, or on a motion/petition to compel arbitration pursuant to this Section 16.8.

K. Severability Of Section 16.8: Should any part of Section 16.8 be ruled invalid, illegal, unenforceable, voidable or void, then the remainder of Section 16.8 shall still remain in effect. Should any part of Section 16.8 conflict with any non-waivable or non-modifiable statutory rights, Section 16.8 shall be interpreted and applied to the extent possible without conflicting with statutory rights.

16.9. Relief. Franchisee acknowledges that the breach or threatened breach of any provision within Sections 5.3, 6.1 through 6.4, 14.2 through 14.11 or 15.6 (B) through 15.6(K) would cause irreparable harm to Franchisor for which there is no adequate remedy at law. Therefore Franchisor shall be entitled to preliminary and permanent injunctive relief to enjoin actual or threatened violation of any such provision.

16.10 Severability. If any provision of this Agreement is held to be invalid, the remaining provisions of this Agreement shall remain in effect. Should any provision of this Agreement be held to conflict with any statutory rights, such provision shall be interpreted and applied to the extent possible without conflicting with such statutory rights.

16.11. Notices. Except as otherwise stated in this Agreement, all notices which are required by this Agreement shall be deemed to be delivered 3 days after being placed in the U.S. Mail, certified mail, return receipt requested or priority mail with delivery receipt confirmation, or one day after being sent by United Parcel Service or other receipted overnight courier service if addressed to a party at the address stated in the introductory paragraph of this Agreement, or other address of which a party has given notice to the other, or immediately by hand delivery to a party. Franchisee shall provide Franchisor Franchisee's physical address for notice purposes under this Section and shall keep Franchisor updated of any changes thereto.

16.12. Force Majeure. A party shall not be liable for delay in performance of up to 30 days, other than performance of an obligation to pay money to the other party, if the delay is due to terrorism, war, riot, strike or other labor trouble, utility failure, storm, fire, flood, earthquake, hurricane, explosion, embargo, blockade, insurrection, act of God or other similar event that is beyond the control of the parties. In the event of such delay, the time for performance will be extended by a period of time equal to the cause of the delay, but no longer than 30 days.

16.13. Opportunity to Review. Franchisee acknowledges having had an opportunity to review Franchisor's Franchise Disclosure Document for at least 14 calendar days before signing any agreement with Franchisor or making any payment to Franchisor, to consult with an attorney and other professional advisors of Franchisee's choice, and Franchisee has made the decision whether or not to consult with such advisors.

Executed as of the date first stated above:

FRANCHISEE	FRANCHISOR
_____	ADVANCED FRESH CONCEPTS FRANCHISE CORP.
Signature _____	Signature _____
Printed Name_____	Printed Name _____
Title _____	Title _____

EXHIBIT A

GUARANTY

In exchange for Franchisor's execution of this Agreement, the undersigned unconditionally, absolutely and irrevocably guaranties and promises to pay and perform any and all indebtedness and obligations of Franchisee (an entity and/or operation in which the undersigned has an ownership interest) to Franchisor under this Agreement and all other Franchise Documents. If more than one person signs below, the obligations of the undersigned shall be joint and several.

Signature:_____

Print Name: _____

Signature:_____

Print Name:_____

Signature:_____

Print Name:_____

EXHIBIT B

UNION FOOD SERVICE COUNTER RIDER

Franchisee acknowledges and understands that Franchisee's Food Service Counter is covered by a union contract. As a result, employee rights, wages and benefits are regulated by the facility where the Food Service Counter and the applicable union is located. Franchisee acknowledges and agrees that because Franchisee's Food Service Counter is governed by a union contract, Franchisee shall comply with all union requirements, including, but not limited to, compensation for off the clock work.

Franchisee acknowledges and agrees to take any and all action needed to comply with the union contract then in effect.

FRANCHISEE

_____

Signature _____

Printed Name_____

Title _____

EXHIBIT C

ADDENDUM TO FRANCHISE AGREEMENT AND FULL-TIME LOCATION FRANCHISE ADDENDUM

This Addendum to Franchise Agreement and Full-Time Location Addendum (this "Addendum") is made this ____ day of _____, 20___ between Advanced Fresh Concepts Franchise Corp. ("Franchisor") and _____ ("Franchisee") with reference to the following facts:

R E C I T A L S

Concurrently upon signing a Franchise Agreement for a Food Service Counter, Franchisee is also signing a franchise agreement for a Freshly Go Counter offering prepared fresh-cut fruit and vegetables from one or more Freshly Go Counters at a grocery store, retail center or other location that someone else owns under Franchisor's separate franchise disclosure document. As an accommodation, Franchisor is willing to amend the Franchise Agreement on the terms herein. Accordingly, the parties have agreed as follows:

A G R E E M E N T

A. Initial Franchise Fee. Section 9.1 of the Franchise Agreement and Section C of the Full-Time Location Addendum are amended to reduce the initial franchise fee to $5,000. If Franchisee desires to finance a portion of the initial franchise fee, Franchisor has agreed to finance up to $2,500 of the initial franchise fee over three (3) months.

B Miscellaneous. Defined terms not defined in this Addendum shall have the meaning provided in the Franchise Agreement. This Addendum shall be deemed to be part of, and shall be subject to all other terms and conditions in, the Franchise Agreement. In any conflict between the Franchise Agreement and this Addendum, the provisions in this Addendum shall control.

Executed as of the date first stated above:

FRANCHISEE	FRANCHISOR
_____	ADVANCED FRESH CONCEPTS FRANCHISE CORP.
Signature _____	Signature _____
Printed Name_____	Printed Name _____
Title _____	Title _____

EXHIBIT D

FULL-TIME LOCATION FRANCHISE ADDENDUM

FULL-TIME LOCATION FRANCHISE ADDENDUM

This Full-Time Location Franchise Addendum (this "Addendum") is made this ____ day of _____, 20___ between Advanced Fresh Concepts Franchise Corp. ("Franchisor") and _____ ("Franchisee") with reference to the following facts:

RECITALS

Franchisor and Franchisee entered into a Franchise Agreement dated _____, 20__ (the "Franchise Agreement"). By this Addendum, Franchisee and Franchisor want to designate a location to be operated by Franchisee pursuant to Section 1 of the Franchise Agreement. Accordingly, the parties have agreed as follows:

AGREEMENT

The following provisions shall be deemed to be added to and made part of the Franchise Agreement:

A. Grant. Franchisor grants Franchisee the right to establish and operate a full-time Food Service Counter (the "Food Service Counter") using the AFC System and the Marks applicable to the selected location, at the following location: _____ _____ _____ (the "Location").

B. Food Service Counter Type. (check or circle one):

____ Zenshi Counter

_____ AFC Food Service Counter

____ Wild Blue Counter

C. Initial Fee. On signing this Addendum, Franchisee shall pay to Franchisor an initial fee of $_____ in lump sum. The fee shall be deemed to be fully earned on signing and is nonrefundable.

D. Term. The term of this Addendum starts immediately and shall expire or terminate at the same time as the Franchise Agreement. Franchisee shall start operating the Food Service Counter not later than _____, 20__, unless Franchisor consents in writing to extend the date.

E. Initial Inventory. Before Franchisee starts operation, Franchisor may elect to provide the Food Service Counter with equipment, initial supplies and inventory that Franchisor considers necessary to start operating, and Franchisee shall pay Franchisor's charges for these items.

F. Payments to Franchisee. Subject to Section 9.3 of the Franchise Agreement, Franchisor shall return to Franchisee ____ % of the Gross Sales of the Food Service Counter, as reported by and received from the owner of the facility where the Food Service Counter is located. Franchisor shall pay the amounts due to Franchisee, within 30 days after receiving the sales report and payment for the applicable period from the facility owner.

G. Operating Hours; Staffing. The Food Service Counter shall be operated on a full-time basis each day that the location where the Food Service Counter is located is open for business. The Food Service Counter shall have sufficient amount of food prepared and placed in the display case by 11:00 a.m. each day. The Food Service Counter shall be staffed during key trading hours. Franchisor shall have the right to revise these requirements on written notice to Franchisee. Franchisee shall ensure the Food Service Counter is adequately staffed and that the display case is adequately stocked during business hours.

H. Termination.

H.1. Franchisor may elect to terminate this Addendum for any grounds permitted in Section 15 of the Franchise Agreement. The parties mutually acknowledge that any termination of this Addendum shall not by itself be a termination of the Franchise Agreement or any other addendum between Franchisee and Franchisor. On termination of this Addendum, Franchisee shall comply with all the post termination provisions of Section 15.6 of the Franchise Agreement as applicable to the Food Service Counter.

H.2 Franchisor shall have the right to elect whether or not to terminate this Addendum either together with, or separate from the rest of the Franchise Agreement or any other addendum between Franchisee and Franchisor, according to the provisions of Sections 15.1 through 15.5 of the Franchise Agreement.

H.3. On termination or expiration of this Addendum, Franchisor shall have the option (but not the obligation), exercisable by delivering notice to Franchisee during the thirty (30) days following termination or expiration, to purchase the Assets of the Food Service Counter. "Assets" means equipment, supplies, signage and non-perishable inventory.

H.4. The purchase price for the Assets will be the fair market value as reasonably determined by Franchisor. Any amounts Franchisee owes to Franchisor or its affiliates shall be applied to reduce the purchase price.

H.5. The balance of the purchase price, after the deductions in Section H.4, shall be payable by Franchisor to Franchisee, at the closing. The closing shall occur at a date stated by Franchisor in the notice to Franchisee of Franchisor's exercise of the purchase option. That date shall be no later than 30 days after delivery of the notice, provided that the date may be later as reasonably determined by Franchisor to allow time for compliance with bulk sales laws. At closing, the parties shall execute and deliver all documents necessary to vest title in the purchased assets in Franchisor, free and clear of liens and encumbrances. Franchisee shall provide Franchisor with all information necessary to close the transaction.

H.6. Franchisor shall also have the right (but not the obligation) to purchase non-expired approved perishable inventory at the Food Service Counter at the time of expiration or termination of this Addendum. The purchase price for the non-expired approved perishable inventory will be the product cost paid by franchisee to acquire these products from Franchisor or Franchisor's approved suppliers. Any amounts Franchisee owes to Franchisor or its affiliates shall be applied to reduce the purchase price.

I. Miscellaneous.

I.1. Franchisee shall, with regard to the Food Service Counter, perform all the obligations, comply with all the restrictions, and be subject to all the provisions in the Franchise Agreement.

I.2. Defined terms not defined in this Addendum shall have the meaning provided in the Franchise Agreement.

I.3. This Addendum shall be deemed to be part of, and shall be subject to all other terms and conditions in, the Franchise Agreement.

I.4. In any conflict between the Franchise Agreement and this Addendum, the provisions in this Addendum shall control.

Signed as of the date first written above.

FRANCHISEE	FRANCHISOR
_____	ADVANCED FRESH CONCEPTS FRANCHISE CORP.
Signature: _____	By: _____
Print Name: _____	Print Name: _____

GUARANTY

In exchange for Franchisor's execution of this Agreement, the undersigned unconditionally, absolutely and irrevocably guaranties and promises to pay and perform any and all indebtedness and obligations of Franchisee (an entity and/or operation in which the undersigned has an ownership interest) to Franchisor under this Addendum and all other Franchise Documents. If more than one person signs below, the obligations of the undersigned shall be joint and several.

Signature:_____

Print Name: _____

Signature:_____

Print Name:_____

EXHIBIT E

PART-TIME LOCATION ADDENDUM

PART-TIME LOCATION FRANCHISE ADDENDUM

This Part-Time Location Franchise Addendum (this "Addendum") is made this ____ day of _____, 20___ between Advanced Fresh Concepts Franchise Corp. ("Franchisor") and _____ ("Franchisee") with reference to the following facts:

RECITALS

Franchisor and Franchisee entered into a Franchise Agreement dated _____, 20__ (the "Franchise Agreement"). By this Addendum, Franchisee and Franchisor want to designate a location to be operated by Franchisee pursuant to Section 1 of the Franchise Agreement. Accordingly, the parties have agreed as follows:

AGREEMENT

The following provisions shall be deemed to be added to and made part of the Franchise Agreement:

A. Grant. Franchisor grants Franchisee the right to establish and operate a part-time Food Service Counter (the "Food Service Counter") using the AFC System and the Marks applicable to the selected location, at the following location: _____
_____
_____ (the "Location").

B. Food Service Counter Type. (check or circle one):

_____ Zenshi Counter

____ AFC Food Service Counter

____ Wild Blue Counter

C. Term. The term of this Addendum starts immediately and shall expire or terminate at the same time as the Franchise Agreement. Franchisee shall start operating the Food Service Counter not later than _____, 20__, unless Franchisor consents in writing to extend the date.

D. Initial Inventory. Before Franchisee starts operation, Franchisor may elect to provide the Food Service Counter with equipment, initial supplies and inventory that Franchisor considers necessary to start operating, and Franchisee shall pay Franchisor's charges for these items.

E. Payments to Franchisee. Subject to Section 9.3 of the Franchise Agreement, Franchisor shall return to Franchisee ____ % of the Gross Sales of the Food Service Counter, as reported by and received from the owner of the facility where the Food Service Counter is located. Franchisor shall pay the amounts due to Franchisee, within 30 days after receiving the sales report and payment for the applicable period from the facility owner.

F. Operating Hours; Staffing. The Food Service Counter shall be operated on a part-time basis each day that the location where the Food Service Counter is located is open for business. The Food Service Counter shall have sufficient amount of food prepared and placed in the Food Service Counter's display case before trading hours each day. As a part-time location, the Food Service Counter shall not be required to have personnel physically present more than four hours per day. Franchisor shall have the right to revise these requirements on written notice to Franchisee. Franchisee shall ensure the Food Service Counter is adequately staffed and that the display case is adequately stocked during business hours.

G. Termination.

G.1. Franchisor may elect to terminate this Addendum for any grounds permitted in Section 15 of the Franchise Agreement. The parties mutually acknowledge that any termination of this Addendum shall not by itself be a termination of the Franchise Agreement or any other addendum between Franchisee and Franchisor. On termination of this Addendum, Franchisee shall comply with all the post termination provisions of Section 15.6 of the Franchise Agreement as applicable to the Food Service Counter.

G.2 Franchisor shall have the right to elect whether or not to terminate this Addendum either together with, or separate from the rest of the Franchise Agreement or any other addendum between Franchisee and Franchisor, according to the provisions of Sections 15.1 through 15.5 of the Franchise Agreement.

G.3. On termination or expiration of this Addendum, Franchisor shall have the option (but not the obligation), exercisable by delivering notice to Franchisee during the thirty (30) days following termination or expiration, to purchase the Assets of the Food Service Counter. "Assets" means equipment, supplies, signage and non-perishable inventory.

G.4. The purchase price for the Assets will be the fair market value as reasonably determined by Franchisor. Any amounts Franchisee owes to Franchisor or its affiliates shall be applied to reduce the purchase price.

G.5. The balance of the purchase price, after the deductions in Section G.4, shall be payable by Franchisor to Franchisee, at the closing. The closing shall occur at a date stated by Franchisor in the notice to Franchisee of Franchisor's exercise of the purchase option. That date shall be no later than 30 days after delivery of the notice, provided that the date may be later as reasonably determined by Franchisor to allow time for compliance with bulk sales laws. At closing, the parties shall execute and deliver all documents necessary to vest title in the purchased assets in Franchisor, free and clear of liens and encumbrances. Franchisee shall provide Franchisor with all information necessary to close the transaction.

G.6. Franchisor shall also have the right (but not the obligation) to purchase non-expired approved perishable inventory at the Food Service Counter at the time of expiration or termination of this Addendum. The purchase price for the non-expired approved perishable inventory will be the product cost paid by franchisee to acquire these products from Franchisor or Franchisor's approved suppliers. Any amounts Franchisee owes to Franchisor or its affiliates shall be applied to reduce the purchase price.

H. Miscellaneous.

H.1. Franchisee shall, with regard to the Food Service Counter, perform all the obligations, comply with all the restrictions, and be subject to all the provisions in the Franchise Agreement.

H.2. Defined terms not defined in this Addendum shall have the meaning provided in the Franchise Agreement.

H.3. This Addendum shall be deemed to be part of, and shall be subject to all other terms and conditions in, the Franchise Agreement.

H.4. In any conflict between the Franchise Agreement and this Addendum, the provisions in this Addendum shall control.

Signed as of the date first written above.

FRANCHISEE	FRANCHISOR
_____	ADVANCED FRESH CONCEPTS FRANCHISE CORP.
Signature: _____	By: _____
Print Name: _____	Print Name: _____

GUARANTY

In exchange for Franchisor's execution of this Agreement, the undersigned unconditionally, absolutely and irrevocably guaranties and promises to pay and perform any and all indebtedness and obligations of Franchisee (an entity and/or operation in which the undersigned has an ownership interest) to Franchisor under this Addendum and all other Franchise Documents. If more than one person signs below, the obligations of the undersigned shall be joint and several.

Signature:_____

Print Name: _____

Signature:_____

Print Name:_____

Signature:_____

Print Name:_____

EXHIBIT F

SELF-SERVICE LOCATION ADDENDUM

SELF-SERVICE LOCATION ADDENDUM

This Self-Service Location Addendum (this "Addendum") is made this ____ day of _____, 20___ between Advanced Fresh Concepts Franchise Corp. ("Franchisor") and _____ ("Franchisee") with reference to the following facts:

RECITALS

Franchisor and Franchisee entered into a Franchise Agreement dated _____, 20__ (the "Franchise Agreement"). Franchisee wants to establish a self-service food service counter, to be operated pursuant to the Franchise Agreement. Franchisor is willing to let Franchisee do so on the terms in this Addendum. Accordingly, the parties have agreed as follows:

AGREEMENT

The following provisions shall be deemed to be added to and made part of the Franchise Agreement:

A. Grant. Franchisor grants Franchisee the right to establish and operate a self-service food service counter (the "Self-Service Food Service Counter") using the AFC System and the Marks applicable to the selected location, at the following location _____(the "Self-Service Location").

B. Self-Service Food Service Counter Type. (check or circle one):

____ Zenshi Counter

_____ AFC Food Service Counter

____ Wild Blue Counter

C. Term. The term of this Addendum starts immediately and shall expire or terminate at the same time as the Franchise Agreement. Franchisee shall start operating the Self-Service Food Service Counter not later than _____, 20__ , unless Franchisor consents in writing to extend the date.

D. Initial Inventory. Before Franchisee starts operation, Franchisor may elect to provide the Self-Service Food Service Counter with equipment, initial supplies and inventory that Franchisor considers necessary to start operating, and Franchisee shall pay Franchisor's charges for these items.

E. Payments to Franchisee. Subject to Section 9.3 of the Franchise Agreement, Franchisor shall return to Franchisee ____ % of the Gross Sales of the Self-Service Food Service Counter, as reported by and received from the owner of the facility where the Self-Service Food Service Counter is located. Franchisor shall pay the amounts due to Franchisee, within 30 days after receiving the sales report and payment for the applicable period from the facility owner.

F. Operation.

F.1. Franchisee shall have the right to operate at the Self-Service Location, but only a Self-Service Food Service Counter operating pursuant to the Franchise Agreement, as amended by this Addendum.

F.2. Franchisee shall perform all food preparation for the Self-Service Food Service Counter only at the following facility: _____ _____ _____ and shall deliver the products to and place them for display at the Self-Service Food Service Counter.

F.3. Franchisee or Franchisee's personnel shall inspect the Self-Service Food Service Counter at least once daily and cause a sufficient amount of sushi and other food products to be placed in the display case before trading hours each day. Franchisor shall have the right to revise these requirements on written notice to Franchisee. The Self-Service Food Service Counter shall be adequately stocked during business hours.

G. Termination.

G.1. Franchisor may elect to terminate this Addendum at any time and for any reason or no reason on 30 day written notice. The parties mutually acknowledge that any termination of this Addendum shall not by itself be termination of the Franchise Agreement. On termination of this Addendum, Franchisee shall comply with all the post termination provisions of Section 15.6 of the Franchise Agreement as applicable to the Self-Service Food Service Counter.

G.2. Franchisor shall have the right to elect whether or not to terminate this Addendum either together with, or separate from the rest of the Franchise Agreement or any other addendum between Franchisee and Franchisor, according to the provisions of Sections 15.1 through 15.5 of the Franchise Agreement.

G.3. On termination or expiration of this Addendum, Franchisor shall have the option (but not the obligation), exercisable by delivering notice to Franchisee during the thirty (30) days following termination or expiration, to purchase the Assets of the Self-Service Food Service Counter. "Assets" means equipment, supplies, signage and non-perishable inventory.

G.4. The purchase price for the Assets will be the fair market value as reasonably determined by Franchisor. Any amounts Franchisee owes to Franchisor or its affiliates shall be applied to reduce the purchase price.

G.5. The balance of the purchase price, after the deductions in Section G.4, shall be payable by Franchisor to Franchisee, at the closing. The closing shall occur at a date stated by Franchisor in the notice to Franchisee of Franchisor's exercise of the purchase option. That date shall be no later than 30 days after delivery of the notice, provided that the date may be later as reasonably determined by Franchisor to allow time for compliance with bulk sales laws. At closing, the parties shall execute and deliver all documents necessary to vest title in the purchased assets in Franchisor, free and clear of liens and encumbrances. Franchisee shall provide Franchisor with all information necessary to close the transaction.

G.6. Franchisor shall also have the right (but not the obligation) to purchase non-expired approved perishable inventory at the Self-Service Food Service Counter at the time of expiration or termination of this Addendum. The purchase price for the non-expired approved perishable inventory will be the product cost paid by franchisee to acquire these products from Franchisor or Franchisor's approved suppliers. Any amounts Franchisee owes to Franchisor or its affiliates shall be applied to reduce the purchase price.

H. Miscellaneous.

H.1. Franchisee shall, with regard to the Self-Service Food Service Counter, perform all the obligations, comply with all the restrictions, and be subject to all the provisions in the Franchise Agreement.

H.2. Defined terms not defined in this Addendum shall have the meaning provided in the Franchise Agreement.

H.3. This Addendum shall be deemed to be part of, and shall be subject to all other terms and conditions in, the Franchise Agreement.

H.4. In any conflict between the Franchise Agreement and this Addendum, the provisions in this Addendum shall control.

Signed as of the date first written above.

FRANCHISEE	FRANCHISOR
_____	ADVANCED FRESH CONCEPTS FRANCHISE CORP.
Signature: _____	By: _____
Print Name: _____	Print Name: _____
Title: _____	Title: _____

GUARANTY

In exchange for Franchisor's execution of this Agreement, the undersigned unconditionally, absolutely and irrevocably guaranties and promises to pay and perform any and all indebtedness and obligations of Franchisee (an entity and/or operation in which the undersigned has an ownership interest) to Franchisor under this Addendum and all other Franchise Documents. If more than one person signs below, the obligations of the undersigned shall be joint and several.

Signature:_____

Print Name: _____

Signature:_____

Print Name:_____

Signature:_____

Print Name:_____

EXHIBIT G

GENERAL RELEASE

ADVANCED FRESH CONCEPTS FRANCHISE CORP.
GENERAL RELEASE AGREEMENT

THIS GENERAL RELEASE AGREEMENT (this "**Release Agreement**") is made and entered into as of _____ (the "**Effective Date**"), by and among **ADVANCED FRESH CONCEPTS FRANCHISE CORP.,** a California corporation (**"Franchisor"**), on the one hand, and _____ a _____ (**"Franchisee"**), and _____ ("**Owner**"), on the other hand, who are collectively referred to in this Release Agreement as the "**Releasing Parties**", with reference to the following facts:

A. Franchisor and Franchisee are parties to that certain Franchise Agreement and related ancillary agreements dated _____ (collectively, the "**Franchise Agreement**") pursuant to which Franchisor granted Franchisee a license (the "**License**") to use the service marks and trade names "**Zenshi**," "**AFC**," "**Wild Blue**," "**Hybrid Sushi,**" "**Southern Tsunami**," and other related trademarks, service marks, logos and commercial symbols (the "**AFC Marks**") and the "**AFC System**" (the "**System**") in connection with the operation of one or more AFC Food Service Counter(s)/Wild Blue Counter(s) (collectively, the "**Food Service Counter(s)**") located at _____ (the "**Franchised Location**").

B. Franchisee desires to enter into a _____.

C. This Release Agreement has been requested at a juncture in the relationship of the parties where Franchisor is considering either a change or an expansion of the relationship between the parties and/or their affiliates. Franchisor is unwilling to make the anticipated change or expansion in the relationship of the parties unless it is certain that it is proceeding with a "clean slate" and that there are no outstanding grievances or Claims against it. Releasing Parties are willing to enter into this Release Agreement in consideration for receiving the agreement of Franchisor to an anticipated change or expansion of the relationship between the parties. Releasing Parties acknowledge that this Release Agreement is intended to wipe the slate clean.

NOW, THEREFORE, IT IS AGREED:

1. **DEFINITIONS**. As used in this Release Agreement, the following capitalized terms have the meanings ascribed to them.

1.1 "**Claims**" means all actual and alleged claims, demands, Losses, charges, agreements (whether written or oral), covenants, responsibilities, warranties, obligations, contracts (whether oral or written), debts, violations, suits, counterclaims, cross claims, third party claims, accounts, liabilities, costs, expenses (including attorneys' fees and court costs), rights to terminate and rescind, rights of action and causes of action of any kind or nature, whatsoever, whether known or unknown, matured or unmatured, accrued or unaccrued, suspected or unsuspected, contingent or non-contingent, liquidated or unliquidated, choate or inchoate, and whether or not asserted, threatened, alleged, or litigated, at law, equity, or otherwise.

1.2 "**Constituents**" means past, present and future affiliates, subsidiaries, parent companies, divisions, partners, members, trustees, receivers, executors, representatives, administrators, owners, shareholders, distributors, predecessors, officers, directors, agents, managers, principals, employees, insurers, successors, assigns, representatives and attorneys and the past, present and future officers, directors, agents, managers, principals, members, employees, insurers, successors, assigns, representatives and attorneys of each of the foregoing.

1.3 "**Excluded Matters**" means Franchisor's continuing contractual obligations which arise or continue under and pursuant to the Franchise Agreement on and after the date of this Release Agreement.

1.4 "**Franchisor Released Parties**" means Franchisor, Advanced Fresh Concepts Franchise Corp., a California corporation, and each of its Constituents.

1.5 "**Losses**" means all damages, debts, liabilities, accounts, suits, awards, judgments, payments, diminutions in value and other losses, costs and expenses, however suffered or characterized, all interest thereon, all costs and expenses of investigating any Claim, reference proceeding, lawsuit or arbitration and any appeal therefrom, all actual attorneys' fees incurred in connection therewith, whether or not such Claim, reference proceeding, lawsuit or arbitration is ultimately defeated and, all amounts paid incident to any compromise or settlement of any such Claim, reference proceeding, lawsuit or arbitration.

2. **GENERAL RELEASE AGREEMENT**. Releasing Parties, for themselves and their Constituents, hereby release and forever discharge Franchisor Released Parties from any and all Claims, whether known or unknown, based upon anything that has occurred or existed, or failed to occur or exist, from the beginning of time to the Effective Date, including, without limitation any and all Claims which relate to the Franchise Agreement, any addendum thereto, the Food Service Counter(s), the System, the License, the Marks, and the Franchised Location, and any other agreement entered into prior to the Effective Date between Franchisor Released Parties, on the one hand, and Releasing Parties, on the other hand, except for the Excluded Matters and obligations under this Release Agreement. This waiver, release and discharge is effective immediately in its fullest and most comprehensive sense. This Release Agreement does not apply with respect to claims arising under the Washington Franchise Investment Protection Act, RCW 19.100, and the rules adopted thereunder.

3. **WAIVER OF SECTION 1542 OF THE CALIFORNIA CIVIL CODE**.

3.1 **Section 1542 of the California Civil Code**. Releasing Parties, for themselves and their Constituents, acknowledge that they are familiar with Section 1542 of the California Civil Code, which reads as follows:

> A GENERAL RELEASE DOES NOT EXTEND TO CLAIMS THAT THE CREDITOR OR RELEASING PARTY DOES NOT KNOW OR SUSPECT TO EXIST IN HIS OR HER FAVOR AT THE TIME OF EXECUTING THE RELEASE, AND THAT IF KNOWN BY HIM OR HER WOULD HAVE MATERIALLY AFFECTED HIS OR HER SETTLEMENT WITH THE DEBTOR OR RELEASING PARTY.

3.2 **Waiver**. With respect to those Claims being released pursuant to Section 2, Releasing Parties, for themselves and their Constituents, acknowledge that they are releasing unknown Claims and waive all rights they have or may have under Section 1542 of the California Civil Code or any other statute or common law principle of similar effect. For purposes of this Section 3, Releasing Parties shall be considered to be creditors of the Franchisor Released Parties, and each of them.

4. **UNKNOWN CLAIMS.** Releasing Parties acknowledge and agree that among the wide and comprehensive range of Claims being waived, released, and discharged by this Release Agreement, they are waiving, releasing, and discharging unknown and unsuspected Claims which, if known or suspected by Releasing Parties to exist in their favor at the time of executing this Release Agreement, may have materially affected Releasing Parties' decision to enter into this Release Agreement. It is understood by Releasing Parties that, after the Effective Date, the facts under which this Release Agreement is entered into may turn out to be other than or different from the facts Releasing Parties knew or believed to be true on the Effective Date. Releasing Parties, therefore, expressly assume the risk of the facts turning out to be so different and agree that

this Release Agreement shall be in all respects final and effective and not subject to termination or rescission by any such difference in facts.

5. **REPRESENTATIONS AND WARRANTIES**. Releasing Parties hereby represent and warrant that, in entering into this Release Agreement, Releasing Parties: (i) are doing so freely and voluntarily, either upon the advice of counsel and business advisors of Releasing Parties' own choosing, or without such advice because Releasing Parties, free from coercion, duress or fraud, declined to obtain such advice; (ii) have read and fully understand the terms and scope of this Release Agreement; (iii) understand that this Release Agreement is final and conclusive, and intends to be final and conclusive, as to the matters set forth in this Release Agreement; and (iv) have not assigned, transferred, or conveyed to any third party all or any part of their interest, or any contingent interest, in any of the Claims released by this Release Agreement now or in the future, and are aware of no third party who contends or claims otherwise, and shall not purport to assign, transfer, or convey any interest in any such Claim after the Effective Date.

6. **COVENANTS NOT TO SUE**. Releasing Parties hereby irrevocably covenant that they will not, directly or indirectly: (i) commence, initiate, or cause to be commenced or initiated any proceeding, claim, or demand of any kind against Franchisor Released Parties based upon any Claims released under this Release Agreement; or (ii) assist or encourage any person or entity to investigate, inquire into, commence, initiate, or cause to be commenced or initiated any proceeding, claim, or demand of any kind against Franchisor Released Parties based upon any Claims released under this Release Agreement.

7. **INDEMNITY**. Without in any way limiting any of the rights and remedies otherwise available to the Franchisor Released Parties, Releasing Parties shall defend, indemnify and hold harmless each Franchisor Released Party from and against all Claims whether or not involving third-party Claims, arising directly or indirectly from or in connection with: (i) the assertion by or on behalf of Releasing Parties or their Constituents of any Claim or other matter released pursuant to this Release Agreement; (ii) the assertion by any third party of any Claim or demand against any Franchisor Released Party which Claim or demand arises directly or indirectly from, or in connection with, any Claim or other matter released pursuant to this Release Agreement; (iii) any breach of representations, warranties or covenants hereunder by Releasing Parties or its Constituents; or (iv) the Franchise Agreement, the Food Service Counter(s), the Franchised Location, and/or any and all claims of creditors, customers, vendors, suppliers or invitees of the Food Service Counter(s), or other third parties, for obligations incurred and/or acts or omissions to act by Franchisee, both prior to and following the Effective Date.

8. **GENERAL PROVISIONS**.

8.1 **Amendment**. This Release Agreement cannot be modified, altered or otherwise amended except by an agreement in writing signed by all of the parties.

8.2 **Entire Agreement**. This Release Agreement, together with the agreements referenced in this Release Agreement, constitute the entire understanding between and among the parties with respect to the subject matter of this Release Agreement and supersedes any prior negotiations, understandings, representations, and agreements with respect to the subject matter of this Release Agreement. Nothing in this Release Agreement is intended to disclaim the representations made to Franchisee in the Franchise Disclosure Document. The Recitals set forth in Paragraphs A through C of this Release Agreement are true and correct and are incorporated into this Release Agreement as part of this Release Agreement.

8.3 **Counterparts and Electronic Transmission; Electronic Signatures**. This Release Agreement may be executed in any number of counterparts, each of which shall be deemed to be an original and all of which together shall be deemed to be one and the same instrument. Copies of this Release Agreement with signatures that have been transmitted by email or by facsimile shall constitute and be deemed original

copies of this Release Agreement for all purposes, provided that the copies are fully executed, dated and identical in form to the original hard copy version of this Release Agreement. In addition, this Release Agreement may be signed electronically by the parties and electronic signatures appearing on this Release Agreement shall be deemed to be the same as handwritten signatures for the purposes of the validity, enforceability and admissibility of this Release Agreement.

8.4 **Heirs, Successors and Assigns**. This Release Agreement shall be binding upon and inure to the benefit of the parties and their respective heirs, successors and permitted assigns. In addition, each of Franchisor Released Parties that is not a party shall be a third party beneficiary of this Release Agreement, with the right to enforce this Release Agreement for his, her, or its benefit, whether acting alone or in combination with any other Franchisor Released Party.

8.5 **Interpretation**. The rule that an agreement is to be construed against the party drafting the agreement is hereby waived by the parties, and shall have no applicability in construing this Release Agreement or any of its terms. The headings used in this Release Agreement are for purposes of convenience only and shall not be used in construing the provisions of this Release Agreement. As used in this Release Agreement, the male gender shall include the female and neuter genders, the singular shall include the plural and the plural, the singular.

8.6 **Severability and Validity**. Any provision of this Release Agreement which is prohibited, unenforceable or not authorized in any jurisdiction shall, as to such jurisdiction, be ineffective to the extent of such prohibition, unenforceability or non-authorization without invalidating the remaining provisions of this Release Agreement or affecting the validity, enforceability or legality of such provision in any other jurisdiction.

8.7 **Governing Law and Venue**. This Release Agreement shall be interpreted and construed under the laws of California. In the event of any conflict of law, the law of California shall prevail, without regard to the application of California conflict of law rules. If, however, any provision of this Release Agreement would not be enforceable under the laws of California, and if the Food Service Counter(s) is/are located outside of California and such provision would be enforceable under the laws of the state in which the Food Service Counter(s) is/are located, then such provision shall be interpreted and construed under the laws of that state. Nothing in this Section 8.7 is intended by the parties to subject this Release Agreement to any franchise or similar law, rules, or regulation of the state of California to which it would not otherwise be subject.

8.8 **Arbitration**. Except as precluded by applicable law, any controversy or claim that arises out of or relates to this Release Agreement, or any breach of this Release Agreement, including without limitation any claim that any of this Release Agreement (including this Paragraph 8.8) is invalid, illegal, voidable or void, shall be submitted to arbitration in accordance with the rules of the American Arbitration Association and judgment on the award may be entered in any court with jurisdiction thereof. Unless applicable law requires otherwise, arbitration shall occur in Los Angeles, California. This arbitration provision shall be self-executing, and shall remain in effect after and regardless of expiration or termination of this Release Agreement. If a party fails to appear at any properly noticed arbitration proceeding, an award may be entered against such party regardless of such failure to appear. The prevailing party in any arbitration or other proceeding shall be entitled to recover its reasonable attorneys' fees and costs.

8.9 **Authority of Franchisor**. Franchisor represents and warrants that (i) Franchisor has the power and authority to enter into this Release Agreement and to perform its obligations under this Release Agreement without the approval or consent of any other person or entity, and (ii) the individual who executes this Release Agreement on Franchisor's behalf is duly authorized to do so without the approval or consent of any other person or entity.

8.10 **Authority of Releasing Parties**. Releasing Parties represent and warrant that (i) they have the power and authority to enter into this Release Agreement and to perform their obligations under this Release Agreement without the approval or consent of any other person or entity, and (ii) the individuals who execute this Release Agreement on Releasing Parties' behalves are duly authorized to do so without the approval or consent of any other person or entity.

8.11 **No Waiver**. No delay, waiver, omission, or forbearance on the part of any party to exercise any right, option, duty, or power arising out of any breach or default by any other party of any of the terms, provisions, or covenants of this Release Agreement, and no custom or practice by the parties at variance with the terms of this Release Agreement, shall constitute a waiver by any party to enforce any such right, option, or power as against the other parties, or as to a subsequent breach or default by the other parties.

8.12 **Attorneys' Fees**. If any legal action is brought to enforce the terms of this Release Agreement, the prevailing party shall be entitled to reasonable attorneys' fees and costs, and any and all costs of collection, in addition to any other relief to which that party may be entitled.

8.13 **Further Acts**. The parties agree to execute, acknowledge and deliver to any requesting party, and to procure the execution, acknowledgment and delivery to any requesting party, of any additional documents or instruments which the requesting party may reasonably require to fully effectuate and carry out the provisions of this Release Agreement.

IN WITNESS WHEREOF, the parties to this Release Agreement have executed this Release Agreement as of the Effective Date.

FRANCHISOR:

ADVANCED FRESH CONCEPTS FRANCHISE CORP., A California corporation

By: _____
Name: _____
Title: _____

FRANCHISEE:

_____
A _____

By: _____
Name: _____
Title: _____

OWNER:

_____
_____, an individual

_____
_____, an individual

EXHIBIT H

ASSIGNMENT OF FRANCHISE AGREEMENT AND FRANCHISOR CONSENT

Assignment of Franchise Agreement and Franchisor Consent

This Assignment of Franchise Agreement (this "Assignment") is executed on **DATE** by and between **FRANCHISEE NAME** an individual ("Franchisee"), and **COMPANY NAME** a **STATE** corporation ("Assignee Entity").

Recitals

On **FRANCHISE AGREEMENT DATE** Franchisee entered into a franchise agreement (the "Franchise Agreement") with Advanced Fresh Concepts Franchise Corp. ("Franchisor") for the operation of a sushi bar or food service counter at the following location: **STORE NAME AND LOCATION** (the "Food Service Counter").

Franchisee owns a majority of the outstanding stock or membership interests of Assignee Entity. Franchisee desires to assign his or her Franchise Agreement to the Assignee Entity according to the terms of this Assignment. Accordingly:

Assignment

For Value Received, Franchisee sells, assigns and transfers to Assignee Entity all right, title and interest in and to the Franchise Agreement between Franchisee and Franchisor, concerning the Food Service Counter.

Franchisee Signature: _____

Printed Name: _____

This Assignment is Accepted. Assignee Entity agrees to abide by all terms, conditions and obligations of Franchisee under the Franchise Agreement.

COMPANY NAME
[Assignee Entity Name]

EIN #
[EIN Number]

Signature: _____

Printed Name: _____

Title: _____

Franchisor Consent

By signing below, Advanced Fresh Concepts Franchise Corp., a California corporation, consents to the foregoing assignment, effective on _____.

ADVANCED FRESH CONCEPTS FRANCHISE CORP.
a California corporation

Signature _____

Printed Name _____

Title_____

Guaranty

In exchange for Franchisor's execution of this Agreement, Franchisee absolutely and irrevocably guaranties and promises to pay and perform any and all indebtedness and obligations of Assignee Entity (an entity and/or operation in which the undersigned has an ownership interest) to Franchisor under the Franchise Agreement and all other franchise documents between Assignee Entity and Franchisor.

Signature:_____

Print Name:_____

Date:_____

EXHIBIT I

ASSET SALE AND PURCHASE AGREEMENT

Notice to Buyer and Seller
This is a streamlined, basic form of Agreement
It may not cover all circumstances of your transaction.
You can edit, add to or delete from this Agreement to fit your transaction.

PLEASE REMOVE THIS SENTENCE AND ABOVE PARAGRAPH BEFORE SIGNING

ASSET SALE AND PURCHASE AGREEMENT

This ASSET SALE AND PURCHASE AGREEMENT is entered into this ____ day of _____, 20__, by and between _____ ("Buyer"), and Advanced Fresh Concepts Corp, a California corporation, its Designee or Affiliate ("Seller").

RECITALS

Seller owns assets of a Zenshi Counter/AFC Food Service Counter/Wild Blue Counter (the "**Food Service Counter**") located at _____ _____ (the "Location"). These include the assets listed on Exhibit A to this Agreement. Seller desires to sell, assign and transfer to Buyer, and Buyer desires to purchase and acquire from Seller, the assets listed on Exhibit A to this Agreement. Accordingly, the parties have agreed as follows:

AGREEMENT

1. Purchase and Sale

1.1 Purchase and Sale. Seller agrees to sell, transfer, assign and convey to Buyer, and Buyer agrees to purchase and acquire from Seller, on the Closing Date (as hereinafter defined), all the assets listed in Exhibit A attached to this Agreement and incorporated here by this reference (the "Assets").

1.2 Purchase Price. The total purchase price for the Assets will be of the sum of $_____, together with the assumption by Buyer of the following liabilities and obligations _____ _____.

1.3 Payment. The purchase price stated in Section 1.2 shall be payable in cash or cashier's check on the Closing Date.

1.4 Allocation of Purchase Price. The allocation of the purchase price among the Assets for purposes of federal and state income and franchise tax shall be as follows:
$_____ to Equipment; $_____ to Food Products; $_____ to Value of Established Market; and $_____ Other.

1.5 Further Assurances. From time to time at a party's request, whether at or after the Closing Date, the other party shall execute and deliver such instruments and documents and take such other action as the requesting party reasonably requests to more completely convey and transfer the Assets intended to be transferred hereunder.

1.6 Limitation. Buyer shall have no obligation to assume any obligation of Seller, whether under any contract, lease or other instrument, or arising by law or otherwise, other than as expressly stated in this Agreement.

2. Closing

2.1 Closing Date. The closing will take place at the offices of _____, on _____, 20___ at _____.m., or at such other time and place as may be agreed by Seller and Buyer, provided, however at Seller's sole discretion, that this Agreement shall terminate and be of no force and effect if the closing Date shall not have occurred prior to _____, 20____; and provided, further, that such termination shall not affect the rights or remedies of either party under this Agreement with respect to a breach of, or default under, this Agreement by the other party. On consummation, the closing shall be deemed to take place as of the close of business on the closing date. The time and date of the closing are herein referred to as the "Closing Date."

2.2 Deliveries. At the closing, Seller will deliver to Buyer, against receipt of the purchase price referred to in Section 1.2, a bill of sale and other instruments of transfer and conveyance as reasonably requested by Buyer. At the closing, Buyer will deliver to Seller such instruments of assumption as reasonably requested by Seller.

3. Seller's Representations and Warranties.

Seller represents and warrants to Buyer as follows:

3.1 Organization and Good Standing. Seller is duly organized, validly existing and in good standing under the laws of the State of California and has all requisite power and authority to own, operate and lease its properties and to carry on its business as now being conducted.

3.2 Ownership. Seller owns all right, title and interest in and to the Assets, free and clear of liens and encumbrances other than as provided herein, and has the full right and power to transfer and assign the Assets to Buyer pursuant to this Agreement.

3.3 Authorization. Seller has full power and authority to sign, deliver and perform this Agreement and sell the Assets to Buyer. The signing, delivery and performance by Seller of this Agreement and the transactions contemplated by this Agreement have been duly authorized by all necessary and proper corporate action. This Agreement is a legal, valid and binding obligation of Seller, and each instrument contemplated by this Agreement when executed and delivered by Seller in accordance with the provisions hereof, will be a legal, valid and binding obligation of Seller, in each case enforceable against Seller in accordance with its terms.

4. Buyer's Representations and Warranties.

Buyer represents and warrants to Seller as follows:

4.1 Organization and Good Standing. If Buyer is identified in this Agreement as a corporation or limited liability company or other form of entity, Buyer is duly organized, validly existing and in good standing under the laws of the State of _____, has all requisite power and authority to own, operate and lease its properties and to carry on its business as now being conducted.

4.2 Authorization. Buyer has full power and authority to sign, deliver and perform this Agreement and buy the Assets from Seller. The signing, delivery and performance by Buyer of this Agreement and the transactions contemplated by this Agreement have been, duly authorized by all necessary and proper corporate action. This Agreement is a legal, valid and binding obligation of Buyer and each instrument contemplated by this Agreement when signed and delivered by Buyer in accordance with the provisions hereof, will be a legal, valid and binding obligation of Buyer, in each case enforceable against Buyer in accordance with its terms.

4.3 No Breach or Violation. Neither the signing nor delivery of this Agreement nor the consummation of the transactions contemplated hereby will conflict with or result in a violation or breach of, or constitute a default under, any mortgage, lease or agreement, pursuant to which Buyer is a party or violate any judgment, order, permit, or decree binding on Buyer.

4.4 Documents and Records. Any documents and records being delivered to Seller are true, complete and correct.

5. Covenants.

5.1 Sales Tax. Buyer shall be responsible for the payment to the _____ of any sales tax which may become due by virtue of the sale of the Assets contemplated by this Agreement.

5.2 Bulk Transfer Laws. [_____] [_____] [Both parties initial if applicable or delete if not applicable. If neither initialed nor deleted, this provision shall apply.] The parties mutually agree to waive compliance with the bulk sales provisions of the Uniform Commercial Code of the State of _____, or any other applicable "bulk transfer" law in connection with the sale of the Assets, and Seller agrees to indemnify Buyer against all claims, losses, expenses, obligations, damages or liabilities occurring or arising from such waiver of compliance. Nothing herein contained shall be construed as an acknowledgment by any person that any such law is applicable to such sale.

5.3 Obligations to Personnel. Seller shall be solely responsible for payment of and shall pay all compensation and benefits due or to become due to personnel of the Food Service Counter operated at the Location for services performed through the Closing Date.

6. Conditions to Buyer's Obligations. Buyer's obligations to consummate the transactions contemplated by this Agreement are subject to the performance or satisfaction of the following condition on the Closing Date:

6.1 Bulk Transfer Law. If Section 5.2 has been deleted then Buyer and Seller shall have taken all such action as may be required to comply with all provisions of the Uniform Commercial Code - Bulk Transfer Law applicable to the transactions contemplated by this Agreement.

7. Conditions to Seller's Obligations. Seller's obligation to consummate the transactions contemplated by this Agreement are subject to the performance or satisfaction of the following conditions on or before the Closing Date:

7.1 Representations and Warranties. Buyer's representations and warranties in this Agreement or in any certificate, document or instrument delivered pursuant hereto or in connection with the transactions contemplated hereby shall be true and correct in all material respects as of the Closing Date as if made on and as of the Closing Date.

7.2 Covenants. Buyer shall have performed and complied with all the covenants, agreements and conditions required by this Agreement to be performed or complied with by Buyer, on or before the Closing Date.

7.3 Officers' Certificate. Seller shall have been furnished with a certificate executed on behalf of Buyer by its President or a Vice President, and its Secretary or Assistant Secretary, and by each other person constituting the Buyer, dated the Closing Date, representing and certifying in such detail as Seller may reasonably request, as to the satisfaction of the conditions set forth in Sections 7.1 and 7.2.

7.4 No Actions or Proceedings. There will not be pending or threatened any action or proceeding before any court of governmental body or agency which would seek to restrain, prohibit or invalidate any transaction contemplated by this Agreement.

8. Survival and Indemnification.

8.1 Survival. The representations and warranties of Seller and Buyer in this Agreement and any provision of this Agreement intended, by its terms, to be observed and performed after the closing, shall survive the execution of this Agreement and the Closing Date.

8.2 Buyer's Indemnification. Buyer shall indemnify and hold Seller harmless from and against any damages, losses, liabilities, claims or expenses (including court costs and reasonable attorneys' fees) (the "Damages") arising from the use of the Assets or operation of the Food Service Counter located at _____after the Closing Date.

9. Termination.

9.1 Events of Termination. This Agreement and the transactions contemplated hereby may be terminated at any time prior to the Closing Date: (a) by Buyer, if any of the conditions in Section 6 shall have become incapable of satisfaction or shall not have been satisfied or performed in the manner and within the time required on or before the Closing Date; and shall not have been waived by Buyer; or (b) by Seller, if any of the conditions in Section 7 shall have become incapable of satisfaction or shall not have been satisfied or performed in the manner and within the time required on or before the Closing Date; and shall not have been waived by Seller.

9.2 Effects of Termination. In the event of termination pursuant to this Section 9, or by virtue of the closing not having occurred by _____, 20____, other than as a result of a breach by Seller or Buyer of its covenants contained herein, or the non-fulfillment by Seller or Buyer of a condition in Section 6 or 7 to be fulfilled by Seller or Buyer, in each case solely within its control, this Agreement shall thereafter become void and of no further force and effect.

10. Miscellaneous.

10.1 Headings; Meanings. Section numbers and headings in this Agreement are for convenience only and shall not affect in any way the meaning or interpretation of this Agreement. The provisions of this Agreement shall be interpreted in accordance with their fair meanings, and shall not be strictly construed for or against either party.

10.2 Severability. The invalidity or unenforceability of any particular provision of this Agreement shall not affect the other provisions, and this Agreement shall be construed in all respects as if any invalid or unenforceable provision were omitted.

10.3 Arbitration: Except as precluded by applicable law, any controversy or claim that arises out of or relates to this Agreement, or any breach of this Agreement, including without limitation any claim that any of this Agreement (including this Paragraph 10.3) is invalid, illegal, voidable or void, shall be submitted to arbitration in accordance with the rules of the American Arbitration Association and judgment on the award may be entered in any court with jurisdiction thereof. Unless applicable law requires otherwise, arbitration shall occur in Los Angeles, California. This arbitration provision shall be self-executing, and shall remain in effect after and regardless of expiration or termination of this Agreement. If a party fails to appear at any properly noticed arbitration proceeding, an award may be entered against such party regardless of such failure to appear. The prevailing party in any arbitration or other proceeding shall be entitled to recover its reasonable attorneys' fees and costs.

10.4 Governing Law. The validity, construction and performance of this Agreement shall be governed by the laws, without regard to the laws as to choice or conflict of laws, of the State of California.

10.5 Entire Agreement. This Agreement, including its Exhibits is the entire agreement between the parties on its subject matter, and supersede all prior agreements, understandings, negotiations, representations and discussions, whether verbal or written pertaining to the subject. There are no promises, terms, conditions or obligations of the parties pertaining to that subject matter other than as contained in this Agreement. Nothing in this Agreement is intended to disclaim the representations made to Buyer in the Franchise Disclosure Document.

10.6 Binding Effect. This Agreement shall bind and benefit the parties and their successors and permitted assigns.

10.7 Parties in Interest. Nothing in this Agreement, expressed or implied, is intended to confer on any person or entity other than the parties any right or remedy under or by reason of this Agreement.

10.8 Notices. Any notice or communication required or permitted by this Agreement shall be deemed sufficiently given if in writing and when delivered personally or 48 hours after deposit with the U.S. Postal Service as registered or certified mail, postage prepaid, and addressed as follows:

If to Buyer:
_____
_____
_____
Attention: _____

If to Seller:

Advanced Fresh Concepts Corp.
19700 Mariner Avenue
Torrance, California 90503
Attention: Vincenzo Calcagni

or such other address as a party to whom notice is to be given has furnished to the other party in the manner provided above.

10.9 Amendments and Waiver. This Agreement may be amended, modified or supplemented only by a writing executed by each of the parties.

Signed as of the date first written above.

BUYER	*SELLER*
_____	ADVANCED FRESH CONCEPTS CORP.
_____ Signature	By_____
_____ Title	Its_____

EXHIBIT A

ASSETS

EXHIBIT J

FOOD SERVICE COUNTER TRANSFER AGREEMENT

FOOD SERVICE COUNTER TRANSFER AGREEMENT

This FOOD SERVICE COUNTER TRANSFER AGREEMENT is entered into this ____ day of _____, 20__, by and between _____ ("Buyer"), and Advanced Fresh Concepts Franchise Corp., a California corporation, or its Designee or Affiliate ("Seller").

RECITALS

Seller operates a Zenshi Counter/AFC Food Service Counter/Wild Blue Counter (the "Food Service Counter") at _____ (the "Location"). Buyer wants to purchase from Seller, and operate, the business of, the Food Service Counter. Seller is willing to sell and transfer the business of the Food Service Counter to Buyer according to the terms of this Agreement. Accordingly, the parties have agreed as follows:

AGREEMENT

1. Transfer. Seller transfers to Buyer the business of the Food Service Counter, other than its tangible assets, effective _____, 20__ ("Effective Date").

2. Price. Buyer shall pay Seller $_____, and assume and be responsible for the following liabilities and obligations _____.

3. Payment. Buyer shall pay the purchase price stated in Section 2 in cash or cashier's check on signing this Agreement.

4. Obligations to Personnel. Seller shall be responsible to pay all compensation and benefits due to personnel of the Food Service Counter for services before the Effective Date.

5. Indemnification. Buyer shall indemnify, defend and hold Seller harmless from and against all damages, losses, liabilities, claims or expenses, also including court costs and attorneys' fees, arising from use and operation of the Food Service Counter after the Effective Date.

6. Buyer Acknowledgements. Buyer acknowledges being aware that:

A. the transfer accomplished by this Agreement does not include any tangible assets, equipment or inventory of the Food Service Counter. The sale, transfer and assignment of any assets, equipment and/or inventory to operate the Food Service Counter shall be accomplished by a separate Bill of Sale, on terms agreed by the parties;

B. Buyer will be required to sign and comply with other agreements and instruments to be permitted to operate the Food Service Counter, including but not limited to a Franchise Agreement and other ancillary agreements;

C. the transfer accomplished by this Agreement is conditioned on the property owner or landlord's consent to the transfer; permission to operate the Food Service Counter at the Location is derived from an agreement between Seller (or an entity affiliated with Seller, such as Advanced Fresh Concepts Corp.) and the owner or lessor of the Location; that agreement may be modified or terminable by the owner and/or manager of the Location at any time and on short notice; the owner or facility manager may object to Buyer operating there; and modification, termination or objection by the owner or facility manager may result in the need for relocation and resulting disruption and interruption to Buyer or adjustment to the franchise operations (such as if the facility owner requests that operations be converted from a full time location to a self-service, or part time location, or vice versa).

D. Seller makes no warranty or representation about the length of time Buyer may be permitted to operate the Food Service Counter at the Location or any other warranty or representation of any kind.

7. Interpretation. Section numbers and headings in this Agreement are for convenience only and shall not affect the meaning or interpretation of this Agreement. The provisions of this Agreement shall be interpreted according to their fair meanings, and shall not be strictly construed for or against either party.

8. Severability. The invalidity or unenforceability of any provision of this Agreement shall not affect the other provisions; they shall remain in effect and this Agreement shall be construed as if any invalid or unenforceable provision were omitted.

9. Governing Law. The validity, construction and performance of this Agreement shall be governed by California law, without regard to rules on choice or conflict of laws.

10. Arbitration: Any controversy or claim that arises out of or relates to this Agreement, or any breach of this Agreement, including without limitation any claim that any of this Agreement (including this Section 10) is invalid, illegal, voidable or void, shall be submitted to arbitration in accordance with the rules of the American Arbitration Association and judgment on the award may be entered in any court having jurisdiction. Arbitration shall occur in Los Angeles, California. This arbitration provision shall be self-executing, and shall remain in effect after and regardless of expiration or termination of this Agreement. If a party fails to appear at any properly noticed arbitration proceeding, an award may be entered against such party regardless of such failure to appear. The prevailing party in any arbitration or other proceeding shall be entitled to recover its reasonable attorney's fees and costs.

11. Parties in Interest. This Agreement shall bind and benefit the parties and their successors and permitted assigns. Nothing in this Agreement, expressed or implied, is intended to confer on any person or entity other than the parties any right or remedy under or by reason of this Agreement.

12. Notices. Any notice or communication required or permitted by this Agreement shall be deemed sufficiently given if in writing and when delivered personally or 48 hours after deposit with the U.S. Postal Service as registered or certified mail, postage prepaid, and addressed as follows:

To Buyer:	To Seller:
_____	Advanced Fresh Concepts Franchise Corp.
_____	19700 Mariner Avenue
_____	
	Torrance, California 90503
Attention: _____	Attention: Vincenzo Calcagni

or other address that a party to whom notice is to be given has notified the other party as provided above.

13. Entire Agreement. This Agreement is the entire agreement between the parties on its subject matter, and supersedes all prior agreements, understandings, negotiations, representations and discussions, whether verbal or written pertaining to the subject. There are no promises, terms, conditions or obligations of the parties pertaining to that subject matter other than as contained in this Agreement. Nothing in this Agreement is intended to disclaim the representations made to Buyer in the Franchise Disclosure Document. This Agreement may be amended, modified or supplemented only by a writing executed by each of the parties.

Signed as of the date first written above.

BUYER	*SELLER*
_____	ADVANCED FRESH CONCEPTS FRANCHISE CORP.
_____ Signature	By_____
_____ Title	Its_____

EXHIBIT K

PROMISSORY NOTE

PROMISSORY NOTE

$_____ _____, 20___

FOR VALUE RECEIVED, _____ ("Maker"), hereby promises to pay to ADVANCED FRESH CONCEPTS FRANCHISE CORP., a California corporation ("Holder"), or order, at _____, or at such other place as Holder may from time to time designate in writing, the principal sum of _____ _____ Dollars ($_____), with interest on the unpaid principal balance of this Promissory Note ("Note") from the date of this Note until paid in full at the rate of zero percent (0%) per annum ("Interest Rate").

1. Payment. Principal under this Note is payable as follows:

(i) On the _____ day of each month following the date of this Note, Maker shall pay to Holder monthly installments of principal in the amount of _____ Dollars ($_____).

(ii) On _____, the entire unpaid principal balance of this Note shall be due and payable.

(iii) Maker shall pay the sums due either by cashier's check, money order, credit card or at Holder's option, via deduction from commissions due to Maker.

2. Prepayment. This Note is prepayable, in whole or in part, at any time by Maker upon thirty (30) days' written notice to Holder.

3. Late Charge and Default Rate. Maker recognizes that any default in the payment of any installment of principal due hereunder will result in losses and additional expenses to Holder in servicing the indebtedness evidenced hereby, handling such delinquent payments and meeting its financial obligations, and that the damages caused thereby would be extremely difficult and impractical to ascertain. Therefore, if any installment of principal due hereunder becomes overdue for a period more than ten (10) days, a late charge of one percent (1%) of the delinquent amount may be charged by Holder, at its option, to defray such losses and expenses. If applicable law requires a lesser charge, the maximum rate permitted by law may be charged. Any late charge that accrues during a month shall be payable on the next monthly payment date. Maker agrees that the payment of the late charge set forth in this Paragraph 3 is a reasonable estimate of the damage to Holder in the event of a late payment. The late fee provided in this Paragraph shall be payable in addition to all other remedies of Holder hereunder, at law or in equity.

4. Acceleration. If Maker fails to pay any installment within ten (10) days after the same is due, or if any other default occurs under this Note, or any other Franchise Agreement or addendum between the parties, the entire unpaid principal balance and other sums payable hereunder shall, at the option of Holder, become immediately due and payable without demand or notice.

5. Application of Payments; No Setoffs. All sums payable hereunder shall be payable without offset, demand, abatement or counterclaim of any kind or nature whatsoever, all of which are hereby waived by Maker. Principal shall be payable in lawful money of the United States of America.

6. Waiver. Maker and all other parties who may be directly or indirectly liable hereunder waive (a) presentment, protest and demand, diligence in collection and notice of protest, presentment, demand, dishonor and nonpayment of this Note and (b) any release or discharge arising from any extension of time, discharge of any party liable for payment of this Note, release of any or all of the security for this Note, or other cause of release or discharge other than actual payment in full of this Note.

7. No Waiver. Holder shall not be deemed, by any act or omission, to have waived any of its rights or remedies hereunder unless such waiver is in writing and signed by Holder and then only to the extent specifically set forth in such writing. A waiver with reference to one event shall not be construed as a bar to or waiver of any right or remedy as to any subsequent event. No delay or omission of Holder to exercise any right, whether before or after a default hereunder, shall impair any such right or shall be construed to be a waiver of any right or default, and the acceptance at any time by Holder of any past-due amount shall not be deemed to be a waiver of the right to require prompt payment when due of any other amounts then or thereafter due and payable.

8. Severability. Any provision of this Note which may be prohibited by law or otherwise held invalid shall be ineffective only to the extent of such prohibition or invalidity and shall not invalidate or otherwise render ineffective the remaining provisions of this Note.

9. Choice of Law. This Note, and the rights and obligations hereunder of each of the parties hereto, shall be governed by and construed in accordance with the laws of the State of California, without reference to principles of conflicts of law.

10. Successors and Assigns. The terms, covenants and conditions contained herein shall be binding upon the heirs and successors of Maker and shall inure to the benefit of the successors and assigns of Holder.

11. Costs and Expenses. If any amount under this Note is not paid when due, Maker promises to pay immediately upon demand all costs and expenses of collection, including without limitation actual attorneys' fees, incurred by Holder to enforce the terms of this Note.

12. Venue and Jurisdiction. Maker agrees that any suit, action or proceeding arising out of or relating to this Note, or the interpretation, performance or breach of this Note, may be instituted in the United States District Court for the Central District of California or any court of the State of California located in Los Angeles County, and Maker irrevocably submits to the jurisdiction of those courts and waives any and all objections to jurisdiction or venue that it may have under the laws of the State of California or otherwise in those courts in any such suit, action or proceeding. The provisions of this paragraph shall not be deemed to preclude Holder from filing any suit, action or proceeding in any other appropriate forum.

13. Assignment. Holder may assign this Note and any security for this Note without notice to Maker or the consent of Maker. Maker shall have no right or power to assign or delegate any obligations under this Note.

14. Entire Agreement. This Note contains all of the terms and conditions agreed on by Maker and Holder with respect to the subject matter of this Note. This Note supersedes all prior negotiations, understandings, representations, and agreements between Maker and Holder on its subject. Nothing in this Note is intended to disclaim the representations made to Maker in the Franchise Disclosure Document. This Note cannot be modified or changed except by written instrument signed by Maker and Holder.

15. Miscellaneous. If this Note is executed by more than one person or entity as Maker, the obligations of each such person or entity shall be joint and several. Each right, power and remedy of Holder provided in this Note, any other document securing this Note or at law, in equity or otherwise shall be cumulative and may be pursued singularly, successively or together at the sole discretion of Holder, and the failure to exercise any such right, power or remedy shall in no event be construed as a waiver or a release thereof.

Time is of the essence with respect to each and every provision hereof in which time is a factor.

MAKER

_____

_____
Signature

_____
Print Name

_____
Title

EXHIBIT L

TABLE OF CONTENTS OF OPERATING MANUAL, SSOP MANUAL, STEAM TABLE MANUAL AND RECIPE GUIDES

BOD BUSINESS OPERATION DEPARTMENT

		PAGE
A. Sushi Bar Business Hours	BOD	1
B. Store Relationship	BOD	1
C. Sushi Bar Personnel	BOD	1
D. AFC Supervision	BOD	2
E. Supervision Report	BOD	2
Inspection Reports	BOD	2
Retraining	BOD	2
F. LABELING	BOD	3
DISPOSAL OF LEFTOVER SUSHI	BOD	3
G. Fish, Seafood, Vegetables and Spicy Sauce	BOD	3 – 4
Thawing Procedure		
Preparing Seafood		
Shrimp		
Vegetables		
Carrots		
Spicy Sauce		
Sushi Specification Charts	BOD	5 – 9
Sushi Layout Charts	BOD	10 – 17
H. Daily Production Report (DPR)	BOD	18 – 22
Sample DPR (R-1 & R-2)B	BOD	20
Sample DPR (R-2)B	BOD	21
Sample DPR (NA1)	BOD	22
I. How to Use Sushi Related Products Movement Log	BOD	23
Sushi Related Products Item Movement Log		25
J. Delivery to Self Service Sushi Bars	BOD	26
Equipment	BOD	
Instructions	BOD	
Care for Equipment	BOD	
DELIVERY SUSHI TEMPERATURE LOG	BOD	27
K. Glossary of Terms	BOD	28
L. Sushi Rice Procedure	BOD	29
M. Short Grain Rice	BOD	30
N. Musenmai-Premium	BOD	30
O. Packaging and Cooling	BOD	31
P. Over night chilled cooling procedure	BOD	31
SUSHI	BOD	33

BOD (continued)

			PAGE
CUSTOMER SERVICE			
SALES PROMOTION	.....	BOD	34
DEMO/SAMPLING	.....	BOD	35
Preparation	.....	BOD	36
Sushi Related Products	.....	BOD	36
Other Materials			
HOW TO DEMO	.....	BOD	37 – 38
Introduction to AFC			
The Secret of Good Sushi			
Sushi Rice			
Roll Size	.....	BOD	39
How to Make Rolls	.....	BOD	40 – 42
Presentation	.....	BOD	43
Variations of Maki Sushi		BOD	43
HAND ROLL	.....	BOD	44 – 45
Variations			
SUSHI CHEFS	.....	BOD	46
Frequency of Demos			
Timing			
Natural and Sushi Related			
DEMO/SAMPLING Data Sheet	.....	BOD	47
Roll'n Wrap	.....	BOD	48 – 65
Hot Bowl Instruction	.....	BOD	65 – 77

ACT ACCOUNTING DEPARTMENT

			PAGE
ACCOUNTING PROCEDURE	.....	ACT	1 – 2
Personal Information			
Your Name			
Sales Reporting and Remittance			
IMPORTANT TAX INFORMATION	.....	ACT	3
IDENTIFICATION NUMBER AND CERTIFICATION W-9 FORM	.....	ACT	4
SALES REPORT FORM (SAMPLE)	.....	ACT	5
STATEMENT (model)	.....	ACT	6
EXPLANATION ON SAMPLE COMMISSION STATEMENT	.....	ACT	7
MONTHLY CLOSING DATE	.....	ACT	8
CHANGE OF ADDRESS AND INFORMATION	.....	ACT	9
SALES DISCREPANCIES CLAIM REFERENCE	.....	ACT	10
SALES DISCREPANCIES CLAIM FORM (SAMPLE)	.....	ACT	11

MKT MARKETING DEPARTMENT

		PAGE
INTRODUCTION	MKT	1
CUSTOMER SERVICE	MKT	2
Be Friendly		
Be Knowledgeable About Your Products	MKT	2
Establish Relationship with Your Customer	MKT	3
Be Helpful		
Be Clean and Neat		
Adjust your Working Hours	MKT	4
DEMOS	MKT	5
CUSTOMER COMPLAINT	MKT	6
Product Dissatisfaction		
Food Poisoning		
MERCHANDISING	MKT	7
Sushi		
Natural Products	MKT	8
Display Case		
Shrink		
For the Customers	MKT	9
Advertising		
SUMMARY	MKT	10

LEG LEGAL DEPARTMENT

		PAGE
LABELS & LOGS	LEG	1
PRICE LABELS	LEG	2
Bar Code		
Ingredients		
Net Weight		
Positioning		
HARRASSMENT POLICY	LEG	3 – 4
ACCIDENT PREVENTION & ACTION for EMERGENCIES MANUAL	LEG	5 – 14

DISTRIBUTION CENTER

		PAGE
ORDER PROCEDURE	DC	1
RECEIVING INSTRUCTIONS		
URGENT ORDERS		
BACK ORDER	DC	2
RECEIVING PROCEDURE		
QUALITY ASSURANCE		
FIFO (First In First Out)		
BILL OF LADING (SAMPLE)	DC	3
AFC MISSING / DAMAGED ITEM CLAIM REPORT (form)	DC	4
Missing Items	DC	5
Damaged Items		
Frozen Items		

AFC LABEL MACHINE POLICY

		PAGE
GENERAL INFORMATION	Policy	1
Who Must Have The Label Machine? What is Included?		
Costs and Charges		2
Payment		3
Two-year Warranty Terms		3
Precautions / Warnings		
Sushi Chef's Responsibilities		3 – 4
Hot-Spares / Replacements		4 – 5
Label Machine Service Warranty Renewal		6 – 7
How the Label Machine Works		7
Label Revisions		
Adding New Items		
Out of Box defects/ Missing Items		8
RETURN POLICY		9 - 10
Credit Process		
LABEL MACHINE CREDIT FORM		11
LABEL MACHINE INSTRUCTION GUIDE	Guide	12 – 38

APPENDIX (Forms and Logs)

		PAGE
ITEM MOVEMENT LOG	APX	1
DEMO / SAMPLING DATA SHEET	APX	2
SALES REPORT	APX	3
SALES DISCREPENCY FORM	APX	4
CHANGE OF ADDRESS	APX	5
MISSING / DAMAGED ITEMS FORM	APX	6
ILLNESS POLICY	APX	7
FRANCHISEE COMMUNICATION FORM	APX	8

Table of Contents

Page	Content
5	Kitchen Setup
6-10	Recommended Equipment
11	Ingredient Shelf Life
12-13	Ingredient Size Specifications
14-15	Approved Ingredients
16-21	Menu Planograms
	Recipes
22	- Garlic Ginger Mix
23	- Sushi Rice Procedure
24	- Rice Cooking Procedure
25-31	- Fried Rice/Noodles
32-65	- Entrées
66-75	- Appetizers
76-78	- Soups
79-84	- Marinades

TABLE OF CONTENTS
Sushi Recipe Book

Page	Content
IV	What is Sushi?
V-VI	Sushi Variations
VII-VIII	Ingredients and their Japanese Names
IX	Sushi Knives
X-XIV	Ingredient Shelf Life
XV	Ingredient Preparation
XVI	Approved Brands for Specified Ingredients Purchased Locally
XVII	Sushi Product and Trays Disclaimer
XVIII	Alternate Product Names
	Recipes
1-17	- Classic
18-31	- Combo
32-50	- One Roll
51-67	- Hybrid
68-83	- Wraps
84-100	- Samplers
101-110	- Party Trays
111-119	- Bowls
120-125	- Appetizers

TABLE OF CONTENTS
Sushi Recipe Book

Page	Content
IV	What is Sushi?
V-VI	Sushi Variations
VII-VIII	Ingredients and their Japanese Names
IX	Sushi Knives
X-XIV	Ingredient Shelf Life
XV	Ingredient Preparation
XVI	Approved Brands for Specified Ingredients Purchased Locally
XVII	Sushi Product and Trays Disclaimer
	Recipes
1-4	- Classic
5-19	- Nigiri
20-44	- 10 pcs
45-53	- 15 pcs
54-70	- Hybrid
71-88	- Wraps
89-133	- Combo
134-143	- Party Trays
144-157	- Bowls
158-162	- Appetizers

Franchisee Name: _____

Franchisee ID: _____

Store Name/Number: _____

XOXOXO

Standard Sanitation Operating Procedure

& Methods Manual

pH 135

156 09 el

Table of Contents

Introduction 1
AFC Manuals 1
T.T.C. vs. pH Controlled Locations 1
Daily Logs 2
Rules for Providing Safe Food 2
Personal Hygiene & Personal Cleanliness 2
Handling Employee Illnesses 4
Storage of Personal Belongings 6
Equipment 7
Thermometers 8
Purchasing Food and Supplies 9
Letters of Guarantee 9
Flow of Food 10
Food Storage 10
Receiving 12
Food Allergens 13
Food Preparation 14
Cooling Food 16
Defrosting 17
Protecting Food During Service 17
Food Sampling 18
Proper Labeling 20
Shelf Life 21
Cleaning & Sanitizing 22
Chemical Storage 24
Maintenance of Shared Spaces 25
Pest Control 25
HACCP 26
Laboratory Analysis of Sushi 27
Consumer Advisory 27
ServSafe® & Food Handler's Certificate 27
Food Service - Business License / Health Permit to Operate 28
The Helper 28
Inspection Reports from Enforcement Agencies 28
AFC Internal Audits 28
Delivery Locations 29
Additional Store Requirements 29
Questions? 29

Copyright © 2010 Advanced Fresh Concepts Franchise Corporation

EXHIBIT M

LIST OF U.S. FRANCHISEES, U.S. COMPANY OWNED LOCATIONS, TRANSFERS, TERMINATIONS, NON-RENEWALS, CEASED OPERATIONS/OTHER IN OUR LAST FISCAL YEAR

Zenshi Food Service Counters
Franchise List
As of March 31, 2026

Operator Name	Store Name	Mailing City	Mailing State	Mailing Zip	Phone Number
KEOKHAMPHOUY, Anouxa	Carr's 1805	Anchorage	AK	99517	(907) 339-0500
PINMANEE, Chanaporn	Carr's 1812	Anchorage	AK	99502	(907) 339-1200
NGEWTONG, Nampueng	Carr's 1817	Anchorage	AK	99504	907.339.1700
MACAPINLAC, Jessel Co	Carr's 720	Anchorage	AK	99503	(208) 395-6200
VILORIA, Izy Gayle	Carr's 1813	Anchorage	AK	99515	(907) 339-1300
GALINDO, Mario Ildefonso, Jr.	Carr's 2628	Anchorage	AK	99507	907.339.2800
FARNEN, Kenia Alcantara	Anchorage Elmendorf Air Force	Anchorage	AK	99506	(907) 580-4863
DEANO, Leilanie Asuncion	Carr's 1809	Anchorage	AK	99504	(907) 339-0900
THIKE, Aung Myo	Eielson AFB	Eielson AFB	AK	99702-2399	(907) 377-2148
GALINDO, Kim Allen De Guzman	Carr's 2754	Fairbanks	AK	99709	(907) 374-4000
KAP, Thawng	Fort Wainwright	Fort Wainwright	AK	99703	(907) 353-6218
PAU, Sawm	Safeway 1832	Homer	AK	99603	(907) 226-1000
MAANG, Kaam Suan	Safeway 1820	Juneau	AK	99801	(907) 523-2000
LIAN TAWNG, David	Safeway 1808	Kenai	AK	99611	(907) 283-6300
SANG, Thang Sian Muan	Safeway 1818	Ketchikan	AK	99901	(907) 228-1900
CHAVEZ, Charmaine Javier	Safeway 1090	Kodiak	AK	99615	(907) 481-1500
GALINDO, Kim Allen De Guzman	Carr's 1821	North Pole	AK	99705	(907) 490-2700
Tadaung, Nattikarn	Carr's 1739	Palmer	AK	99645	(907) 761-1400
CIN, Thang Khan	Safeway 2728	Seward	AK	99664	(907) 224-6900
LIAN TAWNG, David	Safeway 548	Soldotna	AK	99669	(907) 714-5400
VILORIA, Izy Gayle	Carr's 1811	Wasilla	AK	99654	907.352.1100
HLA, Kyaw Tun	Publix 1073	Alabaster	AL	35007	(205) 663-3443
MOH, Khin Moh	Publix 1878	Alexander City	AL	35010	(863) 688-1188
BIK, Jonathan Thawngluai	Publix 1203	Athens	AL	35613-2614	(256) 230-2076
BIK, Jonathan Thawngluai	Publix 1790	Athens	AL	35611	(800) 242-1227
TUANG, Suan Thawn	Publix 1294	Auburn	AL	36830	(334) 502-8667
MYINT, Phyu Phyu	Publix 1355	Auburn	AL	36830	(334) 502-2416
MYINT, Phyu Phyu	Publix 1822	Auburn	AL	36830	(334) 502-3616
HTWE, Hla	Publix 1200	Bessemer	AL	35022	(205) 426-7100
LWIN, Zin Mar	Publix 838	Birmingham	AL	35244	(205) 980-7500
LANGLE, Billy K	Publix 1687	Birmingham	AL	35242	(205) 778-5381
MYAT, Htin Lin Min	Publix 1627	Birmingham	AL	35211	(205) 945-2741
SHEIN, Kyawt Kyawt	Publix 841	Birmingham	AL	35244	(205) 987-3401
SHEIN, Kyawt Kyawt	Publix 882	Birmingham	AL	35242	(205) 981-7415
LUN, Magdalene Thang Zam	Publix 1545	BIRMINGHAM	AL	35243	(205) 970-7501
NGAI, Ling	Publix 1059	Birmingham	AL	35210	(205) 951-6626
LWIN, Zin Mar	Publix 1512	Birmingham-Jefferson	AL	35233	(205) 250-7170
MANG, Anthony Khualza	Publix 1281	Calera	AL	35040	(205) 668-3585
ZASIAH, Stephen Vantiam	Publix 1370	Chelsea	AL	35043	(205) 678-5600
KHUAL, Thawng Sen	Publix 1503	Cullman	AL	35055	(256) 736-7000
MANG, Thang Suan	Publix 1362	Daphne	AL	36526	(251) 626-1305
YOO, Jun Young	Piggly Wiggly 36	Deatsville	AL	36022	(334) 361-2425
LING, Tluang Thang	Publix 045	Decatur	AL	35601	(256) 301-0023
NANG, James	Publix 1609	Decatur-Morgan	AL	35603	(256) 351-5261
MUNG, Thawng Ngaih	Publix 1369	Dothan	AL	36303	(334) 792-4281
HNIEM, Biak	Publix 1377	Dothan	AL	36305	(334) 792-6801
MUANG, Thian Pek	Publix 1375	Dothan	AL	36301	(334) 673-1200
KHUP, Phung Go	Publix 1402	Enterprise	AL	36330	(334) 348-1489
LIN, Cung Hu	Publix 1809	Fairhope	AL	36532	(251) 279-6442
MANG, Thang Suan	Publix 1265	Fairhope	AL	36532	(251) 929-7355
MANG, Thang Suan	Publix 1799	Fairhope	AL	36532	(251) 279-6001
THANG, Ting Zung	Publix 1409	Florence	AL	35630	(256) 718-1790
AUNG, Wai Phyo	Publix 1673	Foley	AL	36535	(251) 943-3329
LIAN, Pau Deik	Publix 2098	Foley	AL	36535	(863) 688-1188
SIAM, Gin	Fort Rucker	Fort Rucker	AL	36362	(334) 255-3430
LUN, Magdalene Thang Zam	Publix 1206	Gardendale	AL	35071	(205) 608-4677
LIAN, Pau Deik	Publix 1292	Gulf Shores	AL	36542	(251) 948-1281
LIAN, Pau Deik	Publix 1672	Gulf Shores	AL	36542	(251) 968-2411
MUNG, Thawng Za	Publix 1462	Guntersville	AL	35976	(256) 571-2501
Thang, Kham Lian	Publix 1218	Harvest	AL	35749	(256) 851-5958
THANG, John Hlawn Nuam	WM Grocery 224	Heflin	AL	36264	(256) 463-2310
SHEIN, Kyawt Kyawt	Publix 1074	Helena	AL	35080	(205) 620-0199
MANG, Hau Lan	Publix 165	Homewood	AL	35209	(205) 944-1101
JI, Roi	Publix 1207	Hoover	AL	35216	(205) 824-7218
MYAT, Arkar Min	Publix 1728	Hoover	AL	35244	(205) 428-4923
MAUNG, Salai K	Publix 839	Hoover	AL	35244-3533	(205) 982-8506
CIN ZAH, Tluang Bawi Chin Par	Publix 1065	Hueytown	AL	35023	(205) 497-5366
HMUNG, Biak Nuai	Publix 1629	Huntsville	AL	35824	(256) 774-3888
MAUNG, Tun	Publix 574	Huntsville	AL	35802	(256) 650-2390
Thang, Kham Lian	Publix 1612	Huntsville	AL	35806	(256) 430-5443
CHANG, Elle	Publix 1451	Huntsville	AL	35801	(256) 534-2330
SINT, Ye Htut Win	Publix 209	Huntsville	AL	35803	(256) 885-0002
NYEIN, Ei Ei	Publix 1126	Huntsville	AL	35811	(256) 851-5807
THANG, Za Len	Publix 1785	Huntsville	AL	35802	(256) 650-6086
CIN ZAH, Tluang Bawi Chin Par	Publix 1831	Irondale	AL	35210	(800) 242-1227
LIAN, Thang Cin	Publix 1726	Madison	AL	35757	(256) 325-0540
CHANG, Elle	Publix 1638	Madison	AL	35758	(256) 464-3422
SINT, Ye Htut Win	Publix 1642	Madison	AL	35757	(256) 722-3786
SUNG, Sung	Publix 598	Madison	AL	35758	(256) 461-1860
JONES, Jinyan Y.	Publix 1185	Madison	AL	35756	(256) 230-2626
MANG, Hre Dun	Maxwell AFB	Maxwell AFB	AL	36112	(334) 777-5353
MANG, Hre Dun	Gunter AFB	Maxwell- Gunter AFB	AL	36114	(334) 416-7920
SUNG, Bawi Nei	Publix 2042	Meridianville	AL	35759-1200	(256) 829-3488
PYONE, Thidar	Publix 2002	Millbrook	AL	36054	(334) 604-4819
KHAN, Pau Za	Publix 1436	Mobile	AL	36695	(251) 661-5361
MANG, Vungh Suan	Publix 1404	Mobile	AL	36608	(251) 341-5727
KHUAL, Gin Sian	Publix 1796	Mobile	AL	36695	(800) 242-1227
CHUNG, Hong	Publix 1604	Mobile	AL	36607	(251) 471-4860
THIT, Jun Hnine Thin M	Publix 1024	Montgomery	AL	36117	(334) 290-4501

Zenshi Food Service Counters
Franchise List
As of March 31, 2026

THIT, Jun Hnine Thin M	Publix 1026	Montgomery	AL	36117	(334) 290-4920
QU, Ying	Publix 1025	Montgomery	AL	36109	(334) 260-7782
QU, Ying	Publix 1027	Montgomery	AL	36106	(334) 244-4481
WANG, Yinghong	Publix 1508	Moody	AL	35004	(205) 640-3230
LWIN, Zin Mar	Publix 1085	Mountain Brk	AL	35223	(205) 967-2188
CIN ZAH, Tluang Bawi Chin Par	Publix 1676	Mountain Brook	AL	35223	(205) 802-9189
NHKUM, Ring Tey	Publix 1532	Muscle Shoals	AL	35661	(256) 389-0080
TUN, Thu Zar	Publix 1075	Northport	AL	35476	(205) 339-4232
TUN, Thu Zar	Publix 1691	Northport	AL	35475	(205) 330-7653
LIAN, Gin Sawm	Publix 1213	Orange Beach	AL	36561	(251) 980-1404
SINT, Ye Htut Win	Publix 573	Owens Cross Roads	AL	35763	(256) 512-0990
SHRING, Salai	Publix 1420	Oxford	AL	36203	(256) 835-4075
HLA, Kyaw Tun	Publix 1202	Pelham	AL	35124	(205) 620-0102
NEI, Van	Publix 1391	Pell City	AL	35128	(205) 338-3472
LE, Phuong	Publix 1086	Phenix City	AL	36867	(334) 291-8525
THANG, John Hlawn Nuam	WM Grocery 220	Piedmont	AL	36272	(256) 447-8006
AUNG, SKYLER	Publix 1756	Pike Road	AL	36064	(334) 694-5802
KHAI, Hang Lian	Publix 1069	Pinson	AL	35126	(205) 815-5224
AUNG, SKYLER	Publix 1228	Prattville	AL	36066	(334) 285-0227
TIN, Tha	Publix 1476	Rainbow City	AL	35906	(256) 442-2581
SUNG, Sung	Redstone Arsenal	Redstone Arsenal	AL	35898	(256) 876-3517
THANG, John Hlawn Nuam	WM Grocery 218	Roanoke	AL	36274	(334) 863-6712
Qader, Matthew M	Publix 1650	Saraland	AL	36571	(251) 661-5361
AUNG, Nay Win	Publix 1830	Scottsboro,	AL	35768	(256) 672-6056
TUNG, Tuan Sian	Publix 2027	SEMMES	AL	36575-7417	(863) 688-1188
MANG, Thang Suan	Publix 1400	Spanish Fort	AL	36527	(251) 621-9065
ZAMANG, Avan	Publix 1794	Sylacauga	AL	35150	(800) 242-1227
TAANG, Pau Sian	Publix 1525	Troy	AL	36081	(334) 807-5761
KHAI, Hang Lian	Publix 1082	Trussville	AL	35173	(205) 661-1415
SAW, Steven	Publix 1083	Tuscaloosa	AL	35401	(205) 247-5044
SAW, Steven	Publix 1253	Tuscaloosa	AL	35405	(205) 247-7710
SAW, Steven	Publix 075	Tuscaloosa,	AL	35406	(205) 247-7666
ZASIAH, Stephen Vantiam	Publix 1675	Vestavia Hills	AL	35216	(205) 978-9842
JI, Roi	Publix 842	Vestavia Hills	AL	35216	(205) 824-6005
NEI, Van	Publix 1692	Vestavia Hills	AL	35242	(205) 967-5998
THANG, John Hlawn Nuam	WM Grocery 223	Wedowee	AL	36278	(256) 357-4914
MON, Saw Ei Ei	Publix 2010	WETUMPKA	AL	36092	(334) 478-6186
HKUM, Lung	Little Rock AFB	Little Rock AFB	AR	72099	(501) 987-6990
THANG, Hrang Lian	Safeway 3334	Anthem	AZ	85086	(623) 745-3800
LING PE, Kyaw Soe	Safeway 248	Bullhead City	AZ	86442	(928) 763-3555
CHOI, Kyoung Inn	Safeway 1706	Casa Grande	AZ	85122	(520) 421-7447
TUNG, Hau Za	Safeway 1543	Cave Creek	AZ	85331	(480) 563-9335
WIN, KATY	Safeway 1566	Chandler	AZ	85248	(480) 883-0255
VANG, Zai Mawi	Safeway 1747	Chino Valley	AZ	86323	(928) 636-8358
MON, Thida	Safeway 2052	Cottonwood	AZ	86326	(928) 634-3711
MUNG, Peter	Safeway 1225	Flagstaff	AZ	86004	(928) 774-3774
HU, Thawng	Safeway 270	Flagstaff	AZ	86004	(928) 526-6116
HU, Thawng	Safeway 2028	Flagstaff	AZ	86001	(928) 779-3401
MON, Brenda	Safeway 2835	Florence	AZ	85132	(520) 723-0179
MANG, Kham Khen	Fort Huachuca	Fort Huachuca	AZ	85613	(520) 224-6479
MAWI, Angela Tuan Sui	Safeway 1291	Fountain Hills	AZ	85268	(480) 837-0287
SIN, Catherine	Safeway 23	Gilbert	AZ	85296	(480) 558-0105
THANG, Hrang Lian	Safeway 2821	Glendale	AZ	85310	(623) 518-1946
THANG, Sang Lian	Safeway 1510	Glendale	AZ	85308	(623) 572-8814
MUNG, Tuang	Luke AFB	Glendale	AZ	85307	(623) 935-3821
MARAN, Gum Hkawng La	Safeway 2618	Good Year	AZ	85338	(623) 476-1708
THAWNG, Dang Ling	Safeway 1511	Goodyear	AZ	85395	(623) 935-3228
KYI, Kyi	Safeway 3151	Goodyear	AZ	85338	(623) 691-6417
NAING, Maung Maung	Safeway 1887	Kingman	AZ	86409	(928) 681-4900
HTOON, Than	Albertson's 3204	Lake Havasu	AZ	86403	(928) 854-5300
HTOON, Than	Safeway 216	Lake Havasu City	AZ	86403	(928) 855-7760
CASE, Yong Ye	Safeway 2922	Mesa	AZ	85212	(480) 296-7953
SIN, Catherine	Safeway 3989	Mesa	AZ	85215	(480) 396-9282
AUNG, Mar Lar	Safeway 1521	Oro Valley	AZ	85755	(520) 297-4344
NYI, Nyi	Safeway 1662	Peoria	AZ	85345	(623) 583-7227
KHAI, Do Cin	Safeway 2799	Peoria	AZ	85383	(623) 243-9204
MAWI, Dawt Nei	Safeway 72	Peoria	AZ	85383	(877) 723-3929
THANG, Sang Lian	Albertson's 991	Peoria	AZ	85382	(623) 572-5744
NYI, Nyi	Safeway 2716	Phoenix	AZ	85018	(602) 840-2161
PAR, Tha Neih	Safeway 2097	Phoenix	AZ	85032	(602) 996-5635
HAU, Ling Sian	Safeway 413	Phoenix	AZ	85022	
HAU, Ling Sian	Safeway 1979	Phoenix	AZ	85022	(602) 547-1288
TUANG, Cin Vel	Safeway 1515	Phoenix	AZ	85020	(602) 331-0134
THANG, Hrang Lian	Albertson's Store 4	Phoenix	AZ	85086	(623) 582-4985
KYAW, Saw Type Pue	Safeway 1980	Phoenix	AZ	85048	(480) 283-0032
HTUN, Khine Khin	Albertson's 25	Phoenix	AZ	85050	(480) 342-8231
LING THAUNG, Ngun	Safeway 752	Phoenix	AZ	85044	
ZAR, Hla Thu	Safeway 2651	Phoenix	AZ	85004	(602) 252-4538
THAWN, Tuan Pian	Safeway 174	Phoenix	AZ	85013	(602) 274-7422
SUUM, Thang Khan	Safeway 2042	Phoenix	AZ	85016	(480) 273-7871
Thang , Za Bil	Safeway 1055	Prescott	AZ	86314	(928) 772-6126
IANG, Sui Tha	Safeway 209	Queen Creek	AZ	85142	
IANG, Sui Tha	Safeway 3173	Queen Creek	AZ	85140	(480) 758-3320
WAR, Khaing Khaing	Safeway 1819	Queen Creek	AZ	85142	(480) 279-2733
PAR, Tha Neih	Albertson's 966	Scottsdale	AZ	85250	(480) 991-9707
REM, Tum	Safeway 1750	Scottsdale	AZ	85254	(480) 991-3317
REM, Tum	Safeway 2032	Scottsdale	AZ	85254	(480) 948-6446
TUNG, Hau Za	Albertson's 197	Scottsdale	AZ	85259	(480) 767-0819
AUNG, Kyi Moet Moet	Safeway 1491	Scottsdale	AZ	85250	(480) 532-8588

Zenshi Food Service Counters
Franchise List
As of March 31, 2026

THANG, Simon Peter	Safeway 1663	Scottsdale	AZ	85255	(480) 585-3552
WIN, Thomas Soe	Safeway 1849	Scottsdale	AZ	85266	(480) 595-9844
THAR, Soe Moe	Safeway 1253	Scottsdale	AZ	85255	(480) 585-9366
THAR, Soe Moe	Safeway 1549	Scottsdale	AZ	85260	(480) 994-5653
NAING, Aye Su	Safeway 1207	Sedona	AZ	86336	(928) 282-0118
JIAN, Jonathan	Safeway 2083	Sierra Vista	AZ	85635	(520) 459-4204
TAK, Joseph Naing	Albertson's 977	Surprise	AZ	85374	(623) 546-8038
TAK, Joseph Naing	Safeway 1997	Surprise	AZ	85374	(623) 518-1059
THA, Biak	Safeway 048	Surprise	AZ	85374	(623) 518-1059
THA, Biak	Safeway 1487	Tempe	AZ	85282	(480) 829-6824
THA, Biak	Safeway 1535	Tempe	AZ	85284	(480) 755-1844
BOIH, Kim	Safeway 1984	Tucson	AZ	85749	(520) 760-6087
BOIH, Kim	Safeway 1988	Tucson	AZ	85715	(520) 731-0117
ZAW, Sthan	Safeway 1749	Tucson	AZ	85743	(520) 579-8365
SUNG, Lian Sian	Safeway 1989	Tucson	AZ	85730	(520) 296-0042
SUNG, Lian Sian	Safeway 3322	Tucson	AZ	85748	(520) 885-7777
AUNG, Maung Tin Tun	Safeway 1983	Tucson	AZ	85745	(520) 792-0083
PYONE, Cho Cho	Safeway 1255	Tucson	AZ	85704	(520) 575-0949
CHHA, James Khe	Safeway 250	Tucson	AZ	85718	(520) 299-3534
KHAM, Thawng Cin	Albertson's 961	Tucson	AZ	85719	(520) 321-1212
KHAM, Thawng Cin	Safeway 1684	Tucson	AZ	85719	(520) 206-9047
TWAY, Chit	Davis-Montham AFB	Tuscon	AZ	85707	(520) 790-4341
HTOO, Aj Saw	Safeway 2809	Vail	AZ	85641	(520) 526-7087
CIN, Biak	Safeway 1584	Wickenburg	AZ	85390	
BAO, Ye	Safeway 3281	Alameda	CA	94501	(510) 523-1804
HUANG, Mei Ting	Safeway 2708	Alameda	CA	94501	(510) 863-9000
WAI, San San	Safeway 951	Alameda	CA	94502	(510) 523-4788
YANG, Qin	Safeway 962	Alamo	CA	94507	(925) 820-8022
KO, Sandar Aye	Safeway 1883	American Canyon	CA	94503	(707) 649-5150
Lu, Pin	Von's 2103	Anaheim	CA	92807	(714) 998-3751
Lu, Pin	Vons 2216	Anaheim Hills	CA	92808	(714) 282-7064
LAWI, Nai Lawi Chan Mon	Safeway 273	Anderson	CA	96007	(530) 527-4997
MAW, San San	Safeway 1259	Antioch	CA	94531	(925) 706-4150
GARNER, Porsche	Safeway 640	Aptos	CA	95003	(831) 688-2775
MARCO, Benadeto	Von's 3208	Arcadia	CA	91007	(626) 446-9483
MYINT, Ohn M	Safeway 3122	Auburn	CA	95603	(530) 887-3230
SAY, Saw Wah Ler	Von's 2420	Bakersfield	CA	93311	(661) 663-0595
HTOO, Kyaw Kaw	Beale AFB	Beale AFB	CA	95903-1723	(530) 634-2422
LWIN, Wai	Safeway 1138	Belmont	CA	94002	(650) 596-1730
SAN, Tin Tin	Safeway 668	Belmont	CA	94002	(650) 591-0235
MIN, Tun	Ben Lomond Market	Ben Lomond	CA	95005	(831) 336-3900
MAR, Saw Myat	Safeway 774	Benicia	CA	94510	(707) 745-4047
MARAN, Zau Dan Aung	Safeway 691	Berkeley	CA	94709	(510) 526-3086
CHO, Aung	Pavilions 3237	Beverly Hills	CA	90212	(310) 553-5734
AUNG, Khaing Myat Thu Zar	Von's 1753	Bishop	CA	93514	(760) 872-9811
HUANG, Shun Qin	Safeway 1547	Burlingame	CA	94010	(650) 343-3488
MIN, Kyaw	Mollie Stone's 6	Burlingame	CA	94010	(650) 558-9992
KYAING, Myint	Safeway 1618	Cameron Park	CA	95682	(530) 676-6930
TUN, Nay	Safeway 1293	Campbell	CA	95008	(408) 364-6880
HEIN, Tun Min	Safeway 3241	Campbell	CA	95008	(408) 871-1272
MYINT, Nyunt Win	Von's 3138	Canyon Country	CA	91387	(661) 252-3838
BAEK, Min	Von's 2065	Carlsbad	CA	92009	(760) 431-0157
THU YA, Myat	Safeway 2669	Carmel	CA	93923	(831) 625-8820
DAKHUM, Changbe	Safeway 1560	Carmichael	CA	95608	(916) 371-5205
CHEN, Sam Wencan	Safeway 768	Castro Valley	CA	94546	(510) 538-3088
SINT, Thin Zar	Safeway 1125	Chico	CA	95926	(530) 899-2320
VANG, Sou	Safeway 1651	Chico	CA	95926	(530) 895-6300
CHO, Htin	Safeway 1195	Clayton	CA	94517	(925) 672-2135
RA, Zau	Safeway 984	Clearlake	CA	95422	(707) 994-7275
MIN, Khun Zayar	Von's 1756	Clovis	CA	93611	(559) 297-6410
LEW, Myint Kyi	Safeway 1192	Concord	CA	94521	(925) 356-2710
CHOI, Ungdo	Safeway 955	Concord	CA	94519	(925) 689-3240
ZHAO, Yeying	Safeway 2318	Corte Madera	CA	94925	(415) 927-1960
OO, Maung Saw	Oliver's Market 1	Cotati	CA	94931	(707) 795-9501
CHO, Aung	Pavilions 2212	Culver City	CA	90230	(310) 398-1945
WIN, Nay Hlaing	Safeway 3251	Cupertino	CA	95014	(408) 253-0112
AUNG, Swai Nandar	Safeway 3031	Daly City	CA	94015	(650) 755-0576
ZHANG, Jing	Safeway 1211 W	Danville	CA	94506	(925) 736-0298
MARAN, Ja Shan	Safeway 1211	Danville	CA	94506	(925) 736-0298
XU, Hong Yan	Safeway 1205	Davis	CA	95616	(530) 757-4540
KYAW, Shwe Zin	Safeway 1561	Davis	CA	95618	(530) 792-8500
KANG, Young Goo	Von's 2348	Del Mar	CA	92014	(858) 755-5304
KAVIPIYA, Shin	Safeway 2841	Del Rey Oaks	CA	93940	(831) 393-2090
MOO, Saw Lan Lar	Safeway 1258	Dixon	CA	95620	(707) 678-7400
GARVEY, Luong Bui	Safeway 1953	Dublin	CA	94568	(925) 556-4034
YA, Zaw Thu	Safeway 1932	Dublin	CA	94568	(925) 551-4710
TUN, Thet	Edwards AFB	Edwards AFB	CA	93524	(661) 277-4589
WUDOAN, Xiuzhen	Safeway 2940 W	El Cerito	CA	94530	(510) 233-8400
HLAWN, Ngun	Safeway 2940	El Cerito	CA	94530	(510) 233-8400
LONE, Nai Saike	Safeway 2683	El Dorado Hills	CA	95762	(916) 939-9456
AYE, Kyi Kyi	Safeway 748	El Dorado Hills	CA	95762	(530) 313-4920
LEE, Mike	Northgate Market - El Monte	El Monte	CA	91732	(626) 442-8200
MURAI, Misaki	Los Angeles AFB	El Segundo	CA	90245	(310) 414-9001
MI, Aye Aye	Safeway 1647	Elk Grove	CA	95758	(916) 691-3770
HTET, Zin Lin	Safeway 94	Elk Grove	CA	95757	(916) 479-7017
AUNG, Thaike Tun	Safeway 2908	Eureka	CA	95503	(707) 269-0133
HONG, Yuri	Safeway 1846	Fair Oaks	CA	95628	(916) 965-1034
KHINE, Kathy	Safeway 1895	Fair Oaks	CA	95628	(916) 904-5356
ER, Zaang	Safeway 1127	Fairfield	CA	94533	(707) 427-5640

Zenshi Food Service Counters
Franchise List
As of March 31, 2026

ANDAYA, John Emerson	Safeway 1722	Fairfield	CA	94534	(707) 863-4160
XIA, Lu	Safeway 1794	Folsom	CA	95630	(916) 608-2450
CHIA, Soon	Northgate Market - Fontana	Fontana	CA	92335	(909) 755-0378
White, Maricruz	Safeway 978	Fort Bragg	CA	95437	(707) 964-4079
THAW, Win Win	Fort Irwin Air Force Base	Fort Irwin	CA	92310	(760) 380-3560
AUNG, Thaike Tun	Safeway 975	Fortuna	CA	95540	(707) 725-5104
TARANA, No Name Given	Safeway 999	Foster City	CA	94404	(650) 377-0711
BAILEY, Stephen Michael	Safeway 2840	Freedom	CA	95019	(831) 728-2640
MOE, Alice Khaing	Safeway 1931	Fremont	CA	94539	(510) 497-1003
OO, Khin Sandar	Safeway 993	Fremont	CA	94538	(510) 657-1625
TUN, Myo Min	Safeway 309	Fremont	CA	94538	(510) 794-1666
SIN, Thant	Von's 1754	Fresno	CA	93727	(559) 458-0209
MIN, Khun Zayar	Von's 2188	Fresno	CA	93720	(559) 438-1403
KIM, Taeho	Providence St. Jude Medical Center	Fullerton	CA	92836	(714) 509-7070
TUN, Aung Kyaw	Safeway 1505	Gilroy	CA	95020	(408) 842-6446
LAZING, Lu San	Safeway 2842	Grass Valley	CA	95945	(530) 273-2249
MAUNG, Win Min	Mollie Stone's 4	Greenbrae	CA	94904	(415) 461-1164
PHYO, Pyae Sone	Von's 2560	Grover Beach	CA	93433	(805) 481-0877
NAING, Thein	Safeway 950	Guerneville	CA	95446	(707) 869-9433
YEE, Bewin	Safeway 308	Half Moon Bay	CA	94019	(650) 726-1143
WAI, Thiri	Safeway 971	Hayward	CA	94541	(510) 582-0700
NGEH, Eh	Safeway 998	Healdsburg	CA	95448	(707) 431-7102
AUNG, Nay Win	Big Johns Market	Healdsburg	CA	95448	(707) 433-7151
ER, Zaang	Safeway 2874	Hercules	CA	94547	(510) 322-9030
OO, Ne Tun	Safeway 1757	Hollister	CA	95023	(831) 638-3240
MAUNG, Lwin Maung	Safeway 2778	Jackson	CA	95642	(209) 257-0779
THU, Ar Kar Myo	Safeway 1592	Kings Beach	CA	96143	(530) 546-0170
LEE, Dong Gu	Von's 2598	La Crescenta	CA	91214	(818) 658-1018
LEE, Mike	Northgate Market - La Habra	La Habra	CA	90631	(714) 507-7602
LIAN, Jenny	Von's 2093	La Mesa	CA	91942	(619) 464-1011
LEE, Mike	Northgate Market - La Puente	La Puente	CA	91744	(626) 435-1440
OO, Yin Yin	Von's 2832	La Verne	CA	91750	(909) 593-2572
MO, Aiqun	Safeway 783	Lafayette	CA	94549	(925) 283-0228
RA, Zau	Safeway 983	Lakeport	CA	95453	(707) 263-8072
KIM, Tae Wan	Von's 2209	Lakewood	CA	90713	(562) 866-3781
WIN, Maung Mya	Lemoore NAS	LEMOORE	CA	93246	(559) 998-4669
CARLSON, Wai Mon	Safeway 1761	Lincoln	CA	95648	(916) 408-0800
LEW, Myint Kyi	Safeway 1257	Livermore	CA	94551	(925) 455-2520
YU, Tianshu	Von's 2203	Long Beach	CA	90808	(562) 496-2151
THAN, Naing	Draeger's 002	Los Altos	CA	94022	(650) 948-4425
PHI, Tha Ra	Safeway 2814	Los Altos	CA	94022	(650) 941-1801
Sue, Nant	Safeway 2454	Los Altos	CA	94024	(650) 948-6648
PARK, Il Soon	Von's 2261	Los Angeles	CA	90020	(213) 384-6552
CHIA, Soon	Northgate Market - Los Angeles	Los Angeles	CA	90011	(323) 846-8804
NAING, Win	Von's 2655	Los Angeles	CA	90041	(323) 254-5716
MAW, Stephanie	Albertson's 387	Los Angeles	CA	90027	(323) 660-0687
MAW, Stephanie	Von's 2665	Los Angeles	CA	90027	(323) 662-8107
MAW, Stephanie	Von's 3263	Los Angeles	CA	90026	(213) 483-5573
SILWAL, Krishna Murari	Safeway 1245	Los Gatos	CA	95032	(408) 559-5750
SWE, Thein Thein	Safeway 2815	Los Gatos	CA	95030	(408) 354-9708
MIN, Tun	Summit Market	Los Gatos	CA	95033	(408) 353-2186
MAW, Soe Thinzar	Pavilions 2813	Malibu	CA	90265	(310) 457-2401
AUNG, Khaing Myat Thu Zar	Von's 2400	Mammoth Lakes	CA	93546	(760) 934-4536
TINT, Aye Aye	Pioneer Market	Mariposa	CA	95338	(209) 742-6100
ALTANDUSH, Ariunchimeg	Safeway 972	Martinez	CA	94553	(925) 933-0540
THEIN, Aye Mon Mon	Camp Pendleton MCB	MCB Camp Pendleton	CA	92055	(760) 430-1701
SAN, Htike Htike	McClellan AFB	McClellan	CA	93723	(916) 925-8541
AUNG, Thaike Tun	Safeway 1640	Mckinleyville	CA	95519	(707) 840-9770
THAN, Naing	Draeger's 001	Menlo Park	CA	94025	(650) 324-7700
WIN, Tun Tun	Safeway 1709	Menlo Park	CA	94025	(650) 854-3056
HUANG, Haiwei	Safeway 2719 W	Menlo Park	CA	94025	(650) 847-2901
LIM, Alina Poe	Safeway 2719	Menlo Park	CA	94025	(650) 847-2901
SHEIN, Khaing Zin	Safeway 788	Mill Valley	CA	94941	(415) 388-6216
SEIN, Naw Aye	Safeway 2718	Mill Valley	CA	94941	(415) 360-9016
AUNG, Min	Safeway 2878	Millbrae	CA	94030	(650) 652-3416
SHEN, Ping	Safeway 1879	Milpitas	CA	95035	(408) 262-9850
AUNG, Si Thu	Providence Mission Hospital	Mission Viejo	CA	92691	(949) 364-1400
AUNG THU, Su Myat	Safeway 1661	Modesto	CA	95350	(209) 571-6280
PAN, Peiya	Vons 2200	Monrovia	CA	91016	(626) 303-4547
COLOMA, John Walden	Safeway 173	Monterey	CA	93940	(831) 718-2405
KIM, Han Joo	Safeway 969	Moraga	CA	94556	(925) 376-9492
THANT, Win Min	Safeway 1891	Morgan Hill	CA	95037	(408) 776-9861
CRUZ ZARATE, Ana Laura	Safeway 1455	Morgan Hill	CA	95037	(408) 776-8720
SOE, Yan Naing	Safeway 55	Mountain House	CA	95931	(209) 362-1256
HLAING, KoKo	Safeway 3403	Mountain View	CA	94043	(650) 316-6321
LANDAVERDE, Kemy Carmelina	Safeway 1108	Mountain View	CA	94040	(650) 903-5850
MUN, Ban	Safeway 705	Mountain View	CA	94043	(650) 961-4868
KHAING, War War	Safeway 2948	Mountain View	CA	94040	(650) 948-4533
KOKO, Hnin Nwe	Safeway 2449	Napa	CA	94558	(707) 225-3037
AYE, Pa Pa	Safeway 1224	Newark	CA	94560	(510) 713-3180
CABRERROS, Elvira	Von's 1621	Nipomo	CA	93444	(805) 931-1850
KYU, Pet Wah	Safeway 2828	Novato	CA	94949	(415) 881-9256
HLAING, Maung Chit	Safeway 979	Novato	CA	94947	(415) 898-1503
AUNG, Maung Aye Tun	Von's 2409	Oakhurst	CA	93644	(559) 642-4250
OU, Kang Ye	Safeway 3132 W	Oakland	CA	94611	(510) 658-6612
MAGAR, Shila	Safeway 3132	Oakland	CA	94611	(510) 658-6612
KOKO, Pye Phyo	Safeway 2870	Oakland	CA	94618	(510) 985-0012
ZAW, Maung Maung Moe	Safeway 2657	Oakley	CA	94561	
SUSANTO, Cathrine Cahya	Safeway 967	Orinda	CA	94563	(925) 254-8792

Zenshi Food Service Counters
Franchise List
As of March 31, 2026

NAING, Thuya H.	Von's 2825	Oxnard	CA	93030	(805) 984-0651
MU, San	Safeway 3008	Pacifica	CA	94044	(650) 359-2751
WIN, Tin Cho	Safeway 2843	Pacifica	CA	94044	(650) 290-5014
YEE, Bewin	Safeway 304	Pacifica	CA	94044	(650) 359-6707
TUN, Thet	Von's 3017	Palmdale	CA	93551	(661) 265-9285
LIM, Alina Poe	Safeway 1682	Palo Alto	CA	94306	(650) 321-8400
WIN, Aung Naing	Piazza's Fine Foods 2	Palo Alto	CA	94303	(650) 494-1629
GUO, Sai	Mollie Stone's 3	Palo Alto	CA	94306	(650) 323-8361
PHYO, Zin Mimi	Von's 2858	Pasadena	CA	91107	(626) 744-2615
HTET, Myo	Von's 2152	Pasadena	CA	91105	(626) 577-7149
MOH, Sabai Win	Petaluma Market	Petaluma	CA	94952	(707) 762-5464
AYE, May Saw	Safeway 3011	Petaluma	CA	94954	(707) 766-9097
LONE, Nai Saike	Safeway 1724	Placerville	CA	95667	(530) 295-2972
OO, Win Mar	Safeway 1541	Pleasant Hill	CA	94523	(925) 688-0680
HUANG, Shaona	Safeway 2941	Pleasant Hill	CA	94523	(925) 689-2044
OO, Win Mar	Safeway 2856	Pleasanton	CA	94566	(925) 846-8644
WAI, Thiri	Safeway 1502	Pleasanton	CA	94566	(925) 417-5530
NAING, Thuya H.	Port Hueneme NAS	Port Hueneme	CA	93043	(805) 982-2400
Ramirez, Jesus Preciado	Safeway 1204	Prunedale	CA	93907	(831) 663-6702
THAUNT, Saw Sha	Safeway 1746	Rancho Cordova	CA	95670	(916) 364-4940
HKAW, Bawm	Safeway 1746 W	Rancho Cordovo	CA	95670	(916) 364-4940
LAWI, Nai Lawi Chan Mon	Safeway 1826	Redding	CA	96002	(530) 226-5871
LAWI, Nai Lawi Chan Mon	Safeway 1954	Redding	CA	96001	(530) 247-3030
TUN, Myat Mon	Safeway 305	Redwood City	CA	94063	(650) 306-1900
HE, Rong	Safeway 1866	Rocklin	CA	95765	(916) 789-0101
OO, Aung Zaw	Safeway 918	Rohnert Park	CA	94928	(707) 584-8942
ALTANTSOOJ, Khongorzul	Safeway 2695	Roseville	CA	95747	
LI, Ding	Safeway 1890	Roseville	CA	95678	(916) 783-2119
PHAU RE, Doi La	Safeway 1617 W	Roseville	CA	95661	(916) 783-2225
OO, Aung Aung	Safeway 2620	Roseville	CA	95747	(916) 780-9919
KHINE, Kyaw Kyaw	Safeway 1617	Roseville	CA	95661	(916) 783-2225
SAN, Htike Htike	Safeway 1899	Roseville	CA	95661	(916) 773-4001
MON, Wah Wah	Safeway 1824	S. Lake Tahoe	CA	96150	(530) 542-7740
SHWE, Myint	Safeway 2684	Sacramento	CA	95814	(916) 492-9967
SHWE, Myint	Safeway 3013	Sacramento	CA	95818	(916) 285-8840
LAH PAI, Roilum	Safeway 2242 W	Sacramento	CA	95816	(916) 456-0852
LWIN, Aye Aye	Safeway 2263	Sacramento	CA	95842	(916) 331-2987
LEE, Jong Heon	Safeway 2697	Sacramento	CA	95835	(916) 285-8840
ZAW, Aung Zaw	Safeway 1289	Sacramento	CA	95829	(916) 681-8666
NA, Hyeon Mi	Safeway 2654	Salinas	CA	93905	(831) 444-3625
WIN, Kyaw Zin	Safeway 1110	Salinas	CA	93906	(831) 442-7500
MUNOZ, Shuling Xue	Safeway 1723	San Anselmo	CA	94960	(415) 456-9157
MUNOZ, Shuling Xue	Safeway 2455	San Anselmo	CA	94960	(415) 455-8186
MAUNG, Win Min	Mollie Stone's 5	San Bruno	CA	94066	(650) 873-8075
KANG, Young Goo	Von's 2012	San Diego	CA	92122	(858) 455-6130
KIM, Youngho	San Diego NB	San Diego	CA	92136	(619) 556-8657
JIANG, Yasen	Von's 2735	San Diego	CA	92106	(619) 758-1725
MELTON, Michelle Lee	Von's 4018	San Diego	CA	92131	(858) 721-5350
LIM, Sumi	Von's 1797	San Diego	CA	92130	(858) 523-1842
LEE, Miran	Von's 2040	San Diego	CA	92111	(858) 279-4661
HTWE, Khin Cho	North Island NAS	San Diego	CA	92135	(619) 545-6560
AUNG, Maung Kaday	Miramar MCAS	San Diego	CA	92145	(858) 577-4516
KIM, Jin Seok	Von's 2355	San Diego	CA	92104	(619) 284-6672
MAWI, Lal Rem	Von's 2053	San Diego	CA	92110	(619) 222-6462
WU, Mee Mee	Safeway 4601	San Francisco	CA	94111	(415) 982-3112
CHEN, Mei Chu	Safeway 2646	San Francisco	CA	94118	(415) 683-4070
WIN, Htay	Safeway 739	San Francisco	CA	94110	(415) 826-2866
MA, Qixing	Safeway 985	San Francisco	CA	94122	(415) 665-4565
CHO, Daw Thi Thi	Mollie Stone's 9	San Francisco	CA	94114	(415) 567-4902
LIN, Phillip	Haight Street Market	San Francisco	CA	94117	(415) 255-0643
THAN, Ma Myint Myint	Mollie Stones 10	San Francisco	CA	94127	(415) 664-1600
LWIN, Wai	Safeway 1490	San Francisco	CA	94103	(415) 575-1120
KYAW, Htin Lin	Safeway 667	San Francisco	CA	94131	(415) 824-7744
WIN, Zin Mar	Safeway 2606	San Francisco	CA	94107	(415) 633-1001
WIN, Tin Cho	Safeway 964	San Francisco	CA	94112	(415) 587-7200
LWIN, Htet OO	Safeway 785	San Francisco	CA	94121	(415) 387-4664
AYE, Ya Min	Mollie Stone's 2 (Grnd Central)	San Francisco	CA	94115	(415) 567-4902
LEE, Helen	Gus's Community Market	San Francisco	CA	94110	(415) 431-9300
LEE, Helen	Gus' Market 3	San Francisco	CA	94158	(415) 943-8464
LEE, Helen	Gus' Market 4	San Francisco	CA	94122	(415) 564-0370
MIN, Soe	Good Life Grocers	San Francisco	CA	94110	(415) 648-3221
OO, Myo T	Safeway 1711	San Francisco	CA	94123	(415) 563-4946
OO, Myo T	Safeway 3066	San Francisco	CA	94121	(415) 683-4102
HLA, Tin Tin	Safeway 1507	San Francisco	CA	94114	(415) 861-7660
SHAO, Tie	Safeway 2968	San Jose	CA	95117	(408) 374-2954
DENG, Xiao Bao	Safeway 1574	San Jose	CA	95118	(408) 267-1200
KIE, Lina	Safeway 1465	San Jose	CA	95129	(408) 556-0610
THWE, Yoon Thiri Kay	Safeway 2776	San Jose	CA	95133	(408) 272-2287
MUN, Zaw	Safeway 1476	San Jose	CA	95126	(408) 882-0999
KYAW, Thein	Safeway 316	San Jose	CA	95136	(408) 227-4961
THIHA, Phyo	Safeway 3095	San Jose	CA	95148	(408) 274-5957
AUNG, Lu Min	Safeway 767	San Jose	CA	95129	(408) 257-3070
HTUN, Thwe Moe	Safeway 695	San Jose	CA	95120	(408) 268-3511
KO, Htet Myat	Safeway 929	San Jose	CA	95132	(408) 272-2287
LIN, Zin Phyu Phyu	Safeway 997	San Jose	CA	95118	(408) 267-0550
WIN, Zar Ni	Safeway 1483	San Jose	CA	95125	(408) 264-1523
WIN, Zar Ni	Safeway 2150	San Jose	CA	95125	(408) 288-2352
NAUNG, Naung	Safeway 2900	San Jose	CA	95123	(408) 362-9255
AUNG, Phyo Ei	Safeway 639	San Mateo	CA	94402	(650) 341-4039

Zenshi Food Service Counters
Franchise List
As of March 31, 2026

MYO, Than Htike	Safeway 970	San Mateo	CA	94402	(650) 341-0374
MAUNG, Win Min	Piazza's Fine Foods 1	San Mateo	CA	94403	(650) 341-9496
OO, Aung Zaw	Safeway 653	San Rafael	CA	94901	(415) 456-1453
Wong Dan, Melinda Arlette	Safeway 932	San Rafael	CA	94903	(415) 479-6111
HTUT, Zinmin	Marinwood Market	San Rafael	CA	94903	(415) 491-1965
KO, Aye Ko	Safeway 982	San Ramon	CA	94583	(925) 831-9515
HLA, Bhone	Safeway 2712	San Ramon	CA	94582	(925) 359-2001
CHAN, Davey Soe	Safeway 763	Santa Clara	CA	95050	(408) 244-6873
TUN, Nay	Safeway 700	Santa Clara	CA	95051	(408) 248-0563
LI, Brang	Safeway 1990	Santa Clara	CA	95054	(408) 855-0980
WIN, Nyunt	Safeway 2607	Santa Cruz	CA	95060	(831) 429-9811
HTAY, Maung Myint	Safeway 713	Santa Rosa	CA	95409	(707) 539-1711
HTAY, Maung Myint	Safeway 1576	Santa Rosa	CA	95403	(707) 569-3100
MOH, Thon Hin	Olivers Market 003	Santa Rosa	CA	95401	(707) 284-3530
LEI, Shao Rong	Oliver's Market 2	Santa Rosa	CA	95409	(707) 537-7123
AYE, May Saw	Safeway 2457	Santa Rosa	CA	95401	(707) 546-6877
KHIN, Su Su	Safeway 1265	Santa Rosa	CA	95405	(707) 524-4646
SHEIN, Khaing Zin	Safeway 956	Santa Rosa	CA	95401	(707) 528-3062
SEIN, Chuck Myo	Safeway 1562	Santa Rosa	CA	95405	(707) 522-1455
GUO, Yanyuan	Safeway 919	Saratoga	CA	95070	(408) 867-0180
THU, Wai Min	Mollie Stone's 1	Sausalito	CA	94965	(415) 331-6900
HTWE, Yin Thwe Thwe	Safeway 300	Scotts Valley	CA	95066	(831) 438-7431
MIN, Tun	Scott's Valley Market	Scotts Valley	CA	95066	(831) 438-4324
KANG, Young Em	Fort Ord AFB	Seaside	CA	93955	(831) 242-7668
MYINT, Jennie Myo	Pacific Market	Sebastopol	CA	95472	(707) 823-1418
YAW, Htoi	Safeway 933	Sebastopool	CA	95472	(707) 823-1101
LEE, Sukgwan	Von's 2327	Solana Beach	CA	92075	(858) 481-1008
OO, Tun Tun	Safeway 911	Sonoma	CA	95476	(707) 996-0633
TUN, Zin Sabai	Safeway 3127	Sonora	CA	95370	(209) 533-7810
AYE, Myo	Safeway 1929	Soquel	CA	95073	(831) 477-7212
KYI, Thidar	Safeway 3116	South San Francisco	CA	94080	(650) 588-9005
OO, Tun Tun	Safeway 2605	St. Helena	CA	94574	(707) 968-3620
OO, Yi Yi	Safeway 2707	Stockton	CA	95207	(209) 472-8600
WIN, Htwe	Safeway 1769	Stockton	CA	95204	(209) 461-5555
YAO, Gang	Safeway 1439	Sunnyvale	CA	94087	(408) 481-3300
KO, Htet Myat	Safeway 1196	Sunnyvale	CA	94087	(408) 732-5900
AYE, Thin Thin	Safeway 2887	Sunnyvale	CA	94087	(408) 732-1259
SHAY, Maung Bu	Safeway 381	Tahoe City	CA	96145	
SOE, Yan Naing	Safeway 2600	Tracy	CA	95376	(209) 830-2950
LWIN, Ko Ko	Travis AFB	Travis AFB	CA	94535	(707) 437-4004
OO, Myint	Safeway 1266	Truckee	CA	96161	(530) 582-7950
MYAT, May Thet	Safeway 1968	Turlock	CA	95380	(209) 669-2725
LWIN, May Thu	Twentynine Palms MCAGG Commissary	Twentynine Palms	CA	92278	(760) 830-7572
WEIGHTMAN, Matthew Charles	Safeway 1583	Ukiah	CA	95482	(707) 467-2700
KYAW, Aung Myo	Safeway 1197	Union City	CA	94587	(510) 429-9090
WEI, Li	Von's 2681	Upland	CA	91786	(909) 981-7709
MAR, Saw Myat	Safeway 1631	Vallejo	CA	94591	(707) 554-4467
KYI, Moe Moe Min	Vandenberg SFB	Vandenberg AFB	CA	93437	(805) 734-3354
WIN, Maung San	Safeway 936	Walnut Creek	CA	94598	(925) 937-8537
PE, Sai Nyi Nyi	Pioneer Market 2	Waterford	CA	95386	(209) 874-9751
LEE, Mike	Northgate Market - West Covina	West Covina	CA	91790	(626) 919-5183
MOE, Kyaw Thet	Safeway 965	Willits	CA	95490	(707) 459-5862
THU, Aung	Oliver's 4	Windsor	CA	95492	(707) 687-2050
NGEH, Eh	Safeway 1434	Windsor	CA	95492	(707) 837-2000
Lu, Pin	Von's 3069	Yorba Linda	CA	92886	(714) 777-0781
KIM, Eunsook	Safeway 899	Aurora	CO	80016	(803) 400-4870
KOIRALA, Hareram	Safeway 841	Aurora	CO	80017	(303) 750-6802
LIAN, Van	Buckley SFB	Aurora	CO	80011	(720) 847-5613
WAR, Nway Ywat	Safeway 2612	Aurora	CO	80012	(303) 481-2279
ZING, Hlawn Nei	Safeway 1615	Boulder	CO	80301	(303) 938-1271
THANZG, David Runceu	Safeway 2911	Boulder	CO	80302	(303) 443-5888
THANZG, David Runceu	Safeway 2919	Boulder	CO	80302	(303) 494-5373
VANG, Esther Tuan Cer	Safeway 2624	Broomfield	CO	80020	(303) 209-2405
CEU, Dawt	Safeway 1877	Castle Rock	CO	80104	(303) 688-5028
WAR, Nway Ywat	Safeway 8	Centennial	CO	80112	(303) 771-8707
PIANG, Cing Lam	Safeway 1466	Colorado Springs	CO	80909	(719) 573-6023
MAUNG, Khan	Safeway 1499	Colorado Springs	CO	80922	(719) 573-4860
HLAING, Htet Yamin	Safeway 2816	Colorado Springs	CO	80905	(719) 636-5255
HLAING, Htet Yamin	Safeway 2839	Colorado Springs	CO	80919	(719) 548-1404
AYE, Naing Moe	Safeway 840	Colorado Springs	CO	80920	(719) 282-9066
BIK, Van Tha	Safeway 879	Colorado Springs	CO	80907	(719) 593-8805
BIK, Van Tha	Safeway 1286	Colorado Springs	CO	80904	(719) 473-6446
CIN, Nun Ceu	Safeway 2792	Conifer	CO	80433	(303) 838-4375
KIM, Eunsook	Safeway 885	Denver	CO	80209	(303) 744-8531
HUNG, David	Safeway 244	Denver	CO	80211	(303) 458-8418
CUNG, Biak Tha	Safeway 1248	Denver	CO	80211	(303) 477-5091
THANG, Biak Cin	Albertson's 3836	Denver	CO	80230	(303) 340-4455
THANG, Biak Cin	Safeway 1614	Denver	CO	80218	(303) 777-1231
BK, Prabha	Safeway 1267	Denver	CO	80222	(303) 691-8870
VANG, Esther Tuan Cer	Albertson's 892	Denver	CO	80233	(303) 255-0596
MYINT, Thein Htay	Safeway 2714	Denver	CO	80220	(303) 242-3526
PANDITA , FNU	Albertson's 801	Durango	CO	81301	(970) 382-2224
ENG, Lal	Safeway 1532	Elizabeth	CO	80107	(303) 646-0336
TUN, Zaw Zaw	Safeway 920	Estes Park	CO	80517	(970) 586-4447
HUP, Lai	Safeway 10	Evergreen	CO	80439	(303) 674-6625
CUNG, Dawt Za	Safeway 1644	Falcon	CO	80831	(719) 495-7300
SHEN, Chunhua	Fort Carson	Fort Carson	CO	80913	(719) 526-5811
CAJUMBAN, Errol King De	Safeway 1975	Fountain	CO	80817	(719) 322-9351
NUNG, Mang Cung	Safeway 1568	Fraser	CO	80442	(970) 726-9484

Zenshi Food Service Counters
Franchise List
As of March 31, 2026

Cung, Thang	Safeway 836	Frisco	CO	80443	(970) 668-5144
TUN, Zaw Zaw	Safeway 1045	Ft. Lupton	CO	80621	(303) 857-0136
BIK, Zaw	Safeway 322	Golden	CO	80401	(303) 278-1861
NAWL, Zion Za	Safeway 1533	Grand Junction	CO	81504	(970) 248-9869
CEU, Tawk Hlei	Albertson's 897	Grand Junction	CO	81057	(970) 257-0072
CEU, Tawk Hlei	Safeway 2625	Grand Junction	CO	81506	(970) 257-1392
THANG, Biak	Safeway 2666	Greeley	CO	80634	(970) 330-9956
LIAN, Ro	Safeway 1116	Longmont	CO	80501	(303) 651-7952
LIAN, Ro	Safeway 2910	Longmont	CO	80501	(303) 776-0506
LIAN, Vincent Sen Cung	Safeway 2812	Louisville	CO	80027	(303) 666-8950
THANG, Biak	Safeway 914	Loveland	CO	80537	(970) 669-1342
CUNG, Dawt Za	Safeway 1440	Monument	CO	80132	(719) 488-1187
BK, Prabha	Safeway 1446	Parker	CO	80134	(303) 840-1604
MAUNG, Khan	Peterson Space Force Base (SFB)	Peterson AFB	CO	80914	(719) 556-7765
SUNG, Thluai	Albertson's 816	Pueblo	CO	81008	(719) 543-5921
KHUP, Pau Khen	Safeway 1760	Pueblo	CO	81007	(719) 547-2108
HLAING, Saw Htay	Safeway 637	Steamboat Springs	CO	80487	(970) 879-3766
LIAN, Vincent Sen Cung	Safeway 1656	Superior	CO	80027	(303) 543-1153
LIN, Naing	Safeway 1873	Thornton	CO	80229	(303) 280-2245
AYE, Naing Moe	US Air Force Academy	USAF Academy	CO	80840	(719) 333-2025
Cung, Thang	Safeway 631	West Vail	CO	81657	(970) 476-3561
BIK, Zaw	Safeway 1479	Wheatridge	CO	80033	(303) 456-2670
AUNG, Nay Lin	Big Y 53	Avon	CT	06001	(860) 678-1322
KHAING, Zaw Min	Big Y 82	Bethel	CT	06801	(203) 791-8589
SAI, Sai Sheing	Big Y 12	Branford	CT	06405	(203) 481-9671
ZHANG, Jiwen	Big Y 40	Cheshire	CT	06410	(203) 272-2266
DOLMA, Chozo	Big Y 110	Clinton	CT	06413	(860) 664-8043
LIAN, Thomas Zo	Big Y 31	Danielson	CT	06239	(860) 779-7223
JIANG, Wu	Big Y 117	Derby	CT	06418	(203) 734-9283
DOH, Ktaw	Big Y 060	E Windsor	CT	06088	(860) 623-4000
LATT, Myo Minn	Big Y 73	Ellington	CT	06029	(860) 896-0457
DOH, Ktaw	Big Y 48	Enfield	CT	06082	(860) 749-5514
CHEN, Wen An	Big Y 61	Groton	CT	06340	(860) 449-1229
PHONE, Paul	New London	Groton	CT	06349	(860) 694-2244
PHYU, Lei Win	Big Y 55	Guilford	CT	06437	(203) 453-3267
THEIN, Mai Khun	Big Y 45	Manchester	CT	06042	(860) 645-7140
THARCHIN, Tsewang	Big Y 34	Mansfield	CT	06250	(860) 456-8051
QUAN, Jingnan	Big Y 109	Marlborough	CT	06447	(860) 467-9136
TUN, Thet	Big Y 88	Meriden	CT	06450	(203) 237-5244
KHIN, Yee Yee	Big Y 135	Middletown	CT	06457	(860) 807-4265
Ha, Kyaw Thi	Big Y 121	Milford	CT	06460	(203) 453-3267
THEINT, Su Hnin	Big Y 35	Monroe	CT	06468	(203) 452-9002
DOLMA, Tsepa	Big Y 5	Mystic	CT	06355	(860) 536-5813
TSOMO, Dawa	Big Y 87	N Branford	CT	06471	(203) 488-4953
ZHANG, Jiwen	Big Y 77	N Haven	CT	06473	(203) 234-2103
AYE, Tun	Big Y 32	Naugatuck	CT	06770	(203) 729-4124
LWIN, Kyaw	Big Y 56	New Milford	CT	06776	(860) 355-2628
THEINT, Su Hnin	Big Y 49	Newton	CT	06470	(203) 270-7838
JAMPA, Phuntsok	Big Y 30	Norwich	CT	06360	(860) 886-9996
YAWONGTSANG, Tenzin	Big Y 6	Old Lyme	CT	06371	(860) 434-1433
TUN, Tin Shwe	Big Y 58	Old Saybrook	CT	06475	(413) 504-6058
JINPA, Lobsang	Big Y 33	Plainfield	CT	06374	(860) 564-1888
WANGDU, Michael	Big Y 36	Plainville	CT	06062	(860) 747-5724
THOMAS, Ehray	Big Y 44	Rocky Hill	CT	06067	(413) 504-6044
TOBZIN TASHI, FNU	Big Y 90	Shelton	CT	06484	(413) 504-6090
AUNG, Nay Lin	Big Y 95	Simsbury	CT	06070	(860) 392-3961
LIN, WAI Y	Big Y 17	Stafford Springs	CT	06076	(860) 684-5029
SOE, Hein Zaw	Big Y 84	Stratford	CT	06614	(203) 386-0576
ZEREN, Silang	Big Y 81	Tolland	CT	06084	(860) 872-0304
RAJA, FNU	Big Y 59	Torrington	CT	06790	(860) 489-0246
WANG, Xiu Ming	Big Y 18	West Hartford	CT	06117	(860) 236-1505
ARIYA, No Name Given	Big Y 142	Westport	CT	06880	(203) 349-4138
MYO, Raymond	Bolling AFB	Boiling AFB	DC	20032	(202) 767-4695
LIAN, Tha Uk	Harris Teeter 383	Washington	DC	20003	(202) 554-0164
THANG, Sing Lian	Harris Teeter 231	Washington	DC	20009	(202) 986-1415
AUNG, Tun Naing	Harris Teeter 352	Washington	DC	20002	(202) 589-0351
AUNG, Nhaine Htet	Dover AFB	Dover AFB	DE	19902	(302) 677-3919
THANG, Hrang Tin	Harris Teeter 336	Millsboro	DE	19966	(302) 945-1705
THANG, Hrang Tin	Harris Teeter 327	Selbyville	DE	19975	(302) 436-2827
KIM, Ngin Khat	Publix 1832	MELBOURNE	FL	32940	(321) 426-2915
BO, Thidar	Publix 1505	Alachua County	FL	32615	(386) 418-3435
CIN, Pau Lam	Publix 1793	Altamonte Springs	FL	32701	(407) 551-1423
KYAW, Moe	Publix 442	Altamonte Springs	FL	32714	(407) 522-1100
SAN, Thwe Thwe	Publix 742	Altamonte Springs	FL	32701	(407) 260-9973
ONG, Denver Phone Myint	Publix 1661	Altamonte Springs	FL	32701	(321) 207-7128
MAWI, Run Siang	Publix 1113	Apollo Beach	FL	33572-1804	(813) 649-1280
CUANG, Van Nei	Publix 1260	Apollo Beach	FL	33572	(813) 641-2377
CUANG, Van Nei	Publix 1876	APOLLO BEACH	FL	33572	(813) 893-6962
THANG, Pau En	Publix 501	Apopka	FL	32712	(407) 880-4040
CING, Ning Ngaih Khawm	Publix 227	Apopka	FL	32703	(407) 862-5255
LIANSANG, Khamsawm	Publix 1698	Apopka-Orange	FL	32712	(407) 464-0804
MUNG, Lian	Publix 1528	Arcadia	FL	34266	(863) 494-0999
THANG, Mary Cing Deih	Mayport NS	Atlantic beach	FL	32233	(904) 249-7524
PAIHSAWH, Van Bawi Luai	Publix 1103	Auburndale	FL	33823	(863) 551-9766
TUANG, Khup Gawh	Publix 1788	Auburndale	FL	33823	(863) 984-0510
HERRERA, Aleida Ingrid	Publix 1252	Ave Maria	FL	34142	(239) 304-3269
KAP, Pau Lian	Publix 1558	Aventura-Dade	FL	33180	(305) 792-1429
LINN, Nay Maung	Publix 1763	Babcock Ranch	FL	33982	(239) 567-0903
THONGSA, Suphachai	Publix 1399	Bartow	FL	33830	(863) 534-1560

Zenshi Food Service Counters
Franchise List
As of March 31, 2026

KEUH, Thang	Publix 1309	Belleair Bluffs	FL	33770	(727) 586-0213
THANG, Cin Suan	Publix 1747	Belleview	FL	34420	(352) 245-4115
THANG, Hau Thawn	Publix 324	Boca Raton	FL	33428	(561) 488-5994
THANG, Hau Thawn	Publix 1361	Boca Raton	FL	33433	(561) 338-0648
LIAN, Khup Vang	Publix 1674	Boca Raton	FL	33434	(561) 852-8172
PI, Nang	Publix 553	Boca Raton	FL	33486	(561) 362-5305
CHAI, Bee Lan	Publix 126	Boca Raton	FL	33496	(561) 218-6114
CHAI, Bee Lan	Publix 421	Boca Raton	FL	33434	(561) 852-5580
NGE, Maung	Publix 428	Boca Raton	FL	33434	(561) 241-5005
WIN, Khant Myint	Publix 785	Boca Raton	FL	33431	(561) 361-0529
KHAI, Thang Khan	Publix 606	Boca Raton	FL	33428	(561) 470-9370
MANG, Cing Kham	Publix 600	Boca Raton	FL	33432	(561) 417-2445
KHUP, Gin Lam	Publix 1708	Boca Raton	FL	33496	(561) 981-5390
THITE, Saw Min	Publix 1159	Boca Raton	FL	33433	(561) 544-2422
THITE, Saw Min	Publix 2008	Boca Raton	FL	33498	(863) 688-1188
OO, Kyaw Zan	Publix 1459	Boca Raton	FL	33431	(561) 750-9476
WIN, Sandar	Publix 369	Boca Raton	FL	33487	(561) 241-9700
PHOO, Khine Thazin	Publix 1764	Bokeelia	FL	33922	(239) 558-6088
MAUNG, Shine Win	Publix 1449	Bonita Springs	FL	34134	(239) 495-1600
SI, Aung	Publix 1325	Bonita Springs	FL	34134	(239) 992-0105
MUM, Hay	Publix 604	Bonita Springs	FL	34134	(239) 948-1164
SOE, Myat Zay Yar	Publix 843	Bonita Springs	FL	34135	(239) 992-7508
KHAM, Hau Cin	Publix 1840	Boynton Beach	FL	33436-1406	(561) 369-3500
LIN, Zam Go	Publix 1452	Boynton Beach	FL	33426	(561) 364-3707
TUN, Saw Win	Publix 1405	Boynton Beach	FL	33435	(561) 292-4080
KHAI, Thang Khan	Publix 818	Boynton Beach	FL	33437	(561) 734-6252
KHINE, Akari	Publix 484	Boynton Beach	FL	33437	(561) 731-2065
KHINE, Akari	Publix 1041	Boynton Beach	FL	33426	(561) 732-6148
KHINE, Akari	Publix 1067	Boynton Beach	FL	33437	(561) 292-4489
LIAN, Pau Suan	Publix 1246	Boynton Beach	FL	33437	(561) 734-6252
KHAI, Thang Lian	Publix 1424	Boynton Beach	FL	33426	(561) 868-5530
KHUP, Daniel Cin Khual	Publix 1221	Boynton Beach	FL	33472	(561) 734-3020
MUNG, Dai Kham	Publix 1326	Bradenton	FL	34210	(941) 792-7195
WIN, Thein Htay	Publix 1897	BRADENTON	FL	34207-4104	(941) 756-3455
THANG, Bawi Min	Publix 1004	Bradenton	FL	34209	(941) 792-1213
Winchester, Cung Rem Kim	Publix 1553	Bradenton	FL	34202	(941) 751-1325
SUI, Tha Nei	Publix 746	Bradenton	FL	34208	(941) 744-0866
MON, Ei Thinzar	Publix 491	Bradenton	FL	34203	(941) 727-8808
WIN, Hnin Shwe Ye	Publix 798	Bradenton	FL	34211	(941) 745-5677
LIN, Zaw Bo Bo	Publix 709	Bradenton	FL	34202	(941) 907-6600
AYE, Nilar	Publix 1153	Bradenton	FL	34202	(941) 727-4180
AYE, Nilar	Publix 1723	Bradenton	FL	34212	(941) 744-0640
CHEN, ChinDeng	Publix 780	Bradenton	FL	34205	(941) 746-1660
TUN, Phyo Myint	Publix 1447	Bradenton	FL	34203	(941) 758-4093
BAH, Zaw	Publix 1681	Brandon	FL	33511	(813) 654-2598
HRAM, Mang Nei	Publix 129	Brandon	FL	33510	(813) 654-7689
HTWE, Kim Bawi	Publix 532	Brandon	FL	33511	(813) 684-6562
SANG, Hnin	Publix 663	Brandon	FL	33511	(813) 655-8911
LIAN, Van Sui	Publix 1132	Brooksville	FL	34601-3041	(352) 796-2926
SANG KUNG, Om Thang	Publix 452	Cape Coral	FL	33991	(239) 458-8900
OO, Aung Zin	Publix 854	Cape Coral	FL	33914	(239) 574-6395
OO, Aung Zin	Publix 1327	Cape Coral	FL	33914	(239) 540-0137
PIANG, Thang San	Publix 1328	Cape Coral	FL	33909	(239) 573-0818
PAWLSUK, Michael	Publix 826	Cape Coral	FL	33990	(239) 772-3332
PAWLSUK, Michael	Publix 1147	Cape Coral	FL	33909	(239) 573-1706
PHOO, Khine Thazin	Publix 1007	Cape Coral	FL	33991	(239) 282-5515
THEIN, Hla	Publix 418	Cape Coral	FL	33914	(239) 945-6222
WIN, Ma Kyi Kyi	Publix 379	Casselberry	FL	32707	(407) 831-2020
WIN, Ma Kyi Kyi	Publix 1285	Casselberry	FL	32707	(407) 673-0162
ZAW, Danny Than	Publix 1431	Celebration	FL	34747	(321) 939-3100
LIN, Zay Yar	Publix 867	Clearwater	FL	33756	(727) 443-5700
SIAM, Siang Nei	Publix 1562	Clearwater	FL	33767	(727) 298-8618
SIAM, Siang Nei	Publix 1861	CLEARWATER	FL	33756-4174	(727) 442-8606
LUAI, Za Kip	Publix 1117	Clearwater	FL	33761	(727) 723-0281
HRE, Jonathan Tin	Publix 866	Clearwater	FL	33756	(727) 442-5511
HRE, Jonathan Tin	Publix 1160	Clearwater	FL	33764	(727) 791-0138
KHUP, Vincent Sai	Publix 374	Clearwater	FL	33764	(727) 538-8500
KEUH, Thang	Publix 386	Clearwater	FL	33759	(727) 725-4900
THAWNG, Simon Chin	Publix 1300	Clearwater	FL	33763	(727) 712-3450
TUN, Khin Ohanmar	Publix 027	Clermont	FL	34711	(407) 877-1545
MAUNG, Kyin Sein	Publix 763	Clermont	FL	34711	(352) 394-4437
MAUNG, Kyin Sein	Publix 1357	Clermont	FL	34714	(352) 243-5279
SILVA, Jinda	Publix 1751	Clermont	FL	34711	(352) 241-6177
Soe, Khaing Aye Aye	Publix 015	Clermont	FL	34711	(352) 241-6670
SANG, Thang Sian	Publix 684	Clermont	FL	34714	(352) 243-0529
PU, Kam	Publix 523	Cocoa	FL	32927-5006	(321) 635-8560
LIAN, Hang Muan	Publix 760	Cocoa	FL	32926	(321) 636-2583
THANG, Ngo Sawm	Publix 1098	Cocoa Beach	FL	32931	(321) 783-1014
ME, Me	Publix 1563	Cocoa Beach	FL	32931	(321) 783-3214
LIAN, Zam Khan	Publix 637	Coconut Creek	FL	33073	(954) 427-0563
CIN, Thang Suan	Publix 406	Coconut Creek	FL	33073	(954) 425-0400
CIN, Thang Suan	Publix 872	Coconut Creek	FL	33073	(954) 422-5485
CIN, Tuan Za	Publix 805	Coconut Creek	FL	33066	(954) 975-2490
THU, Aung	Publix 1526	Cooper Ciity	FL	33330	(954) 434-8240
TUANG, Khup Sian	Publix 084	Coral Gables	FL	33134	(305) 445-2641
TUNG, Hang Deih	Publix 094	Coral Gables	FL	33146	(305) 667-1681
NANG, Lian Suan	Publix 1770	Coral Gables	FL	33146	
THANG, Lian Thawn	Publix 051	Coral Gables	FL	33134	(305) 445-3221
PAU, Suan Thawn	Publix 1121	Coral Springs	FL	33067	(954) 344-5560

Zenshi Food Service Counters
Franchise List
As of March 31, 2026

HTAY, Myint	Publix 678	Coral Springs	FL	33076	(954) 757-4405
LIAN, Khup Vang	Publix 1719	CORAL SPRINGS	FL	33067	(954) 753-3307
KHUP, Nuam Za	Publix 1834	Coral Springs	FL	33071	(754) 240-6239
KHUAL, Tuan Khaw	Publix 568	Coral Springs	FL	33076	(954) 796-2090
THANG, Hang Suan	Publix 1311	Coral Springs	FL	33071	(954) 757-2296
PIANG, Thang Thawn	Publix 1114	Coral Springs	FL	33065-2646	(954) 509-5288
MOE, Zaw Zaw	Publix 549	Coral Springs	FL	33071	(954) 346-1705
LIAN, Ceu Uk	Publix 1798	Crawfordville	FL	32327	(850) 926-4072
PAU, Zen Suan	Publix 1602	Crestview	FL	32536	(850) 682-0820
SANG, Zam Sian	Publix 801	Crestview	FL	32536	(850) 682-0942
HRUAI TLUANG, Jerry Biak	Publix 797	Crystal River	FL	34429	(352) 795-4679
MUAN , Cing Sian	Publix 1465	Cutler Bay	FL	33189	(863) 688-1188
KAM, Zam Khan	Publix 1695	Cutler Bay	FL	33157	(305) 235-9684
THANG, Lal	Publix 1496	Dade City	FL	33525	(352) 521-3017
LIMBU, Suresh Kumar Samsohang	Publix 788	Dania Beach	FL	33004	(954) 920-4289
LING, Lian	Publix 1195	Davenport	FL	33896	(863) 420-3152
LING, Lian	Publix 1686	Davenport	FL	33896	(863) 424-1805
ZA HRE, Vung Lian Htay	Publix 770	Davenport	FL	33896-8389	(407) 390-1315
KHAI, Suan Sian	Publix 1738	Davenport	FL	33897	(863) 422-0070
THAWNG, Steven	Publix 879	Davenport	FL	33897	(863) 420-6455
THAWNG, Steven	Publix 1167	Davenport	FL	33837	(863) 421-9157
LUN, Ciin Lam	Publix 372	Davie	FL	33325	(954) 472-0018
BAWI, Nuam	Publix 871	Davie	FL	33314	(954) 581-4393
HANG, Thang Sian	Publix 1606	Davie	FL	33328	(954) 430-6330
KHAM, Joseph	Publix 396	Davie	FL	33330	(954) 680-1900
KIM, Thang	Publix 252	Davie	FL	33324	(954) 472-4511
AUNG, Nyein Chan	Publix 1664	Daytona Beach	FL	32124	(386) 274-3188
KIM, Thuam Khan	Publix 827	Daytona Beach	FL	32117	(386) 677-7161
LO, Dai	Publix 1837	DAYTONA BEACH	FL	32114-5647	(386) 281-4623
KIM, Du	Publix 814	Daytona Beach	FL	32118	(386) 677-3098
NU, Hoih	Publix 1455	Daytona Beach Shores	FL	32118	(386) 788-7773
MUNG, Cia	Publix 246	Deerfield Beach	FL	33442	(954) 427-5828
UK, Van	Publix 348	Deerfield Beach	FL	33442	(954) 481-2266
ZAW, Khin	Publix 861	Deerfield Beach	FL	33441	(954) 427-5537
LWE, Thin	Publix 1444	Deland	FL	32724	(386) 734-7112
LWE, Thin	Publix 1500	Deland	FL	32720	(386) 740-0014
WIN, Khant Myint	Publix 739	Delray Beach	FL	33483	(561) 272-9460
WIN, Thet	Publix 1274	Delray Beach	FL	33446	(561) 498-1285
MANG, Khup Mun	Publix 1018	Delray Beach	FL	33446	(561) 495-1367
NI, Ruth Ni	Publix 279	Delray Beach	FL	33446	(561) 498-2229
NI, Ruth Ni	Publix 388	Delray Beach	FL	33446	(561) 498-2221
NI, Ruth Ni	Publix 1576	Delray Beach	FL	33445-3838	(561) 498-0500
KHUP, Daniel Cin Khual	Publix 181	Delray Beach	FL	33483	(561) 272-1291
MOUH, Mouh	Publix 667	Deltona	FL	32725	(386) 575-0521
MOUH, Mouh	Publix 1123	Deltona	FL	32738	(407) 321-5172
MOUH, Mouh	Publix 1187	Deltona	FL	32738	(386) 789-1543
MOUH, Mouh	Publix 1330	Deltona	FL	32725	(386) 532-8584
CIN, Vum Za	Publix 677	Destin	FL	32541	(850) 837-9094
TOHING, Kam Khan Kim	Publix 885	Destin	FL	32550	(850) 622-2326
MUNG, Suan Thawn	Publix 2023	DESTIN	FL	32541	(850) 389-6014
THANG, Thawng Lian	Publix 1492	Doral	FL	33178	(305) 418-9751
THANG, Thawng Lian	Publix 1571	Doral	FL	33166	(305) 594-5574
CHO, Cindy	Publix 1413	Dunedin	FL	34698	(727) 736-9047
LUAI, George Kio	Publix 353	Dunedin	FL	34698	(727) 736-9284
SANG, Mal Sawm	Publix 1616	Dunnellon	FL	34432	(352) 522-1988
PREE, Po	Publix 429	Edgewater	FL	32141	(386) 427-6022
MUNG, Thang Sian	Eglin AFB	Eglin AFB	FL	32542	(850) 882-3172
LIN, Swe Zin	Publix 737	Englewood	FL	34223	(941) 473-5441
TUN, Nay Wynn	Publix 1826	ESTERO	FL	33928	(239) 675-4029
THIDA, Myat	Publix 847	Estero	FL	33928-7662	(239) 495-8031
SANG, OBED	Publix 614	Estero	FL	33928	(239) 948-1174
HATZAW, Thawnglang	Publix 507	Eustis	FL	32726	(352) 357-4989
HATZAW, Thawnglang	Publix 862	Eustis	FL	32726	(352) 357-6948
PI, Pi	Publix 1499	Eustis	FL	32736	(352) 357-2024
PAUZO, Pasian	Harris Teeter 34	Fernandina Beach	FL	32034	(904) 491-1213
MYINT, Sein Maung	Publix 1257	Flagler Beach	FL	32136	(386) 517-2776
LIN, Nay	Publix 1210	Fleming Isle	FL	32003	(904) 529-1250
THANG, Hau Kap	Publix 1156	Fort Myers	FL	33901	(239) 332-2403
TUN, Thi Han	Publix 775	Fort Myers	FL	33908	(239) 433-0297
KHIN, BD Kyaw Moe	Publix 157	Fort Myers	FL	33908	(239) 432-2522
HTOO, Myo Kyaw	Publix 1039	Fort Myers	FL	33905	(239) 690-9565
WONG, Taik Kam	Publix 578	Fort Myers	FL	33908	(239) 437-3674
TUANG, Kap Khan	Publix 619	Fort Lauderdale	FL	33331	(954) 442-6869
DULA, Lalzam	Publix 070	Fort Lauderdale	FL	33306	(954) 564-9612
BAWI, Hau	Publix 1301	Fort Lauderdale	FL	33328	(954) 434-5728
MUNG, Suankim	Publix 2005	FORT LAUDERDALE	FL	33305-2543	(561) 859-4546
TAITHUL, Thang Lian Piang	Publix 837	FORT LAUDERDALE	FL	33317	(954) 423-9599
TUANG, Kam Lam	Publix 1818	FORT LAUDERDALE	FL	33308-7527	(863) 688-1188
CIN, PIANG LAM	Publix 1696	Fort Lauderdale	FL	33301	(954) 728-8330
DAL, Khup Sian	Publix 850	Fort Lauderdale	FL	33301	(954) 728-8330
DAL, Khup Sian	Publix 1097	Fort Lauderdale	FL	33316	(954) 847-2844
SAWM, Nang Za	Publix 1094	Fort Lauderdale	FL	33304	(954) 888-8915
SAWM, Nang Za	Publix 1297	Fort Lauderdale	FL	33304	(954) 390-0225
PAU, Enn	Publix 715	Fort Lauderdale	FL	33312	(954) 961-0717
KHUAL, Pau Suan	Publix 864	Fort Myers	FL	33912	(239) 768-1710
MAUNG, Aent Bohne	Publix 1262	Fort Myers	FL	33908	(239) 489-0134
TUN, Thi Han	Publix 683	Fort Myers	FL	33919	(239) 415-1515
MUNG, Lian Deih	Publix 1564	Fort Myers	FL	33913	(239) 561-2224
LINN, Nay Maung	Publix 1735	Fort Myers	FL	33905	(239) 690-0554

Zenshi Food Service Counters
Franchise List
As of March 31, 2026

ALEXANDER, Carol	Publix 648	Fort Myers	FL	33908	(239) 454-0145
ALEXANDER, Carol	Publix 1853	Fort Myers	FL	33908	(239) 466-3267
TAN, Bo Bo Thein	Publix 2013	Fort Myers	FL	33912	
AUNG, Ye Moe	Publix 1302	Fort Myers	FL	33919	(239) 481-2242
MAUNG, Harry Thiha	Publix 426	Fort Myers	FL	33919	(239) 939-1771
HTOO, Myo Kyaw	Publix 1280	Fort Myers	FL	33966	(239) 274-1226
ALEXANDER, Carol	Publix 740	Fort Myers Beach	FL	33931	(239) 463-0378
LAL, Biak Thasinthang	Publix 1682	Fort Pierce	FL	34946	(772) 595-5321
THAWN, En	Publix 567	Fort Pierce	FL	34982	(772) 595-1700
LUN, Uap Khan	Publix 383	Fort Walton Beach	FL	32548	(850) 301-0033
LUN, Uap Khan	Publix 766	Fort Walton Beach	FL	32548	(850) 796-1841
MUNG, Thang Sian	Publix 1303	Fort Walton Beach	FL	32547	(850) 864-4440
LUN, Man Don	Publix 1351	Freeport	FL	32439	(850) 835-2296
TAITHUL, Thang Lian Piang	Publix 1124	Ft. Lauderdale	FL	33312-3488	(954) 791-2180
VUNG, Cing	Publix 743	Ft. Lauderdale	FL	33332	(954) 434-1668
WIN, Tun Tun	Publix 1376	Gainesville	FL	32605-3505	(352) 336-1488
TIN, Zaw Min	Publix 1111	Gainesville	FL	32608	(352) 331-1037
TIN, Zaw Min	Publix 1784	Gainesville	FL	32607	(352) 372-4276
OO, Janet Thet	Publix 527	Gainesville	FL	32608	(352) 375-1110
OO, Janet Thet	Publix 680	Gainesville	FL	32608	(352) 367-4324
MAW, Tin Mar	Publix 435	Gainesville	FL	32606	(352) 375-5310
MAW, Tin Mar	Publix 735	Gainesville	FL	32606	(352) 375-1285
LWIN, Tint	Publix 537	Gainesville	FL	32609	(352) 335-3785
LWIN, Tint	Publix 795	Gainesville	FL	32601	(352) 375-2919
Ngone, Phoo Pwint Thet	Publix 1312	Gainesville	FL	32608	(352) 379-7271
AUNG , Yu Khine	Publix 1560	Gainesville	FL	32601	(352) 375-2775
HTIN, Win	Publix 1038	Gainesville	FL	32608	(352) 375-1094
MARAN, Tangnyang	Publix 306	Gainesville	FL	32606	(352) 332-0661
SANG, Ning Sian	Publix 1749	Golf	FL	33436	(561) 903-3141
MARAN, Brangshawng	Publix 023	Greenacres	FL	33413	(561) 641-4500
LIAN, Dal Za	Publix 895	Greenacres	FL	33463	(561) 304-2727
YU, Yue Bo	Publix 1168	Groveland	FL	34736	(352) 429-0233
SAO, Viseth	Publix 1537	Gulf Breeze	FL	32563	(850) 932-5194
JAKOP, Tony	Publix 1189	Gulf Breeze	FL	32561	(850) 932-0113
KYWE, Thavone	Publix 2041	HAINES CITY	FL	33844-9233	(813) 944-8865
SANG, Thang Sian	Publix 1076	Haines City	FL	33844	(863) 419-0331
PUM, Mang Za	Publix 402	Hallandale Beach	FL	33009	(954) 454-6440
HRUAI TLUANG, Jerry Biak	Publix 475	Hernando	FL	34442	(352) 527-6550
FENG, Huanning	Publix 1804	HIALEAH	FL	33018	(786) 804-6444
SANGG, Vum Sawm	Publix 832	Hialeah	FL	33010	(305) 828-2180
PAU, Kham Khup	Publix 188	Hialeah	FL	33015	(305) 829-0423
PAU, Kham Khup	Publix 343	Hialeah	FL	33016	(305) 557-0566
MANG, Thang S.	Publix 1072	Hialeah	FL	33010	(305) 863-8133
MANG, Thang S.	Publix 1264	Hialeah	FL	33013	(305) 888-1033
SING, Pau Khan	Publix 586	Hialeah	FL	33018	(305) 819-2600
SING, Pau Khan	Publix 1386	Hialeah	FL	33014	(305) 820-8885
MAUNG, Steven Nyein-Chan	Publix 571	Hobe Sound	FL	33455	(772) 545-5660
MAUNG, Steven Nyein-Chan	Publix 1585	Hobe Sound	FL	33455	(772) 545-2076
THANG, Van Lalnun	Publix 504	Holiday	FL	34690	(727) 944-3551
MUNG, Jason Thang Zam	Publix 432	Hollywood	FL	33021	(954) 964-5005
MINN, Aye	Publix 1554	Hollywood	FL	33020	(954) 927-7879
Huynh, Hung Tuan	Publix 1598	Hollywood	FL	33026	(954) 437-2457
PUM, Mang	Publix 679	Hollywood	FL	33024	(954) 961-1770
BAWI, Nuam	Publix 053	Hollywood	FL	33021	(954) 987-6331
MYINT, Aye Aye	Publix 1454	Hollywood	FL	33020	(954) 927-5680
PUM, Mang Za	Publix 1693	Hollywood	FL	33019	(954) 266-5005
SING, Lian En	Publix 820	Hollywood	FL	33024	(954) 433-2262
CHIN, Vin Choeng	Publix 681	Holmes Beach	FL	34217	(941) 778-5422
HANG, Tang Zou	Publix 1229	Homestead	FL	33035	(786) 572-6695
MIN, Ye	Publix 1247	Homestead	FL	33032	(305) 257-4090
NUAM, Niang Deih	Publix 1136	Homestead	FL	33033	(305) 242-2679
DIM, Niang Khan	Publix 510	Homestead	FL	33030	(305) 242-1500
THANG, Kham Sawm	Publix 1029	Homestead	FL	33033	(305) 242-0954
FINNELL, Selina Chen	Publix 518	Homosassa	FL	34448-2601	(352) 621-0884
FINNELL, Selina Chen	Publix 1193	Homosassa	FL	34446	(352) 382-1149
MAR, The	Publix 1597	Hudson	FL	34667	(727) 819-2013
MOE, Khaing	Publix 1271	Hudson	FL	34669	(727) 856-0293
SAO, Visa	Hurlburt Field	Hurlburt Field AFB	FL	32544	(850) 881-2138
SANG, Hau Tun	Publix 1688	Indialantic	FL	32903	(321) 953-6709
NUAM, Lun Ngaih	Publix 1760	Inlet Beach	FL	32461	(850) 213-7031
SANG, Lal Ring	Publix 1448	Inverness	FL	34450	(352) 341-2581
TUN, Aung Myo	Publix 1495	Islamorada	FL	33036	(305) 664-4890
CHYAWM, La Ring	Publix 1771	Jackson-Duval	FL	32226	(904) 757-1304
REM, Thang	Publix 1283	Jacksonville	FL	32207-2223	(904) 721-3410
THANG, Mary Cing Deih	Publix 1022	Jacksonville	FL	32223	(904) 262-5258
FENG, Dian	Publix 1084	Jacksonville	FL	32259	(904) 230-3970
NGAIH, Dim Sian	Publix 713	Jacksonville	FL	32224	(904) 223-0554
NGAIH, Dim Sian	Publix 1896	Jacksonville	FL	32225	(904) 221-9821
SHWE, Myo Win	Publix 393	Jacksonville	FL	32257	(904) 262-5474
SHWE, Myo Win	Publix 708	Jacksonville	FL	32256	(904) 538-3851
THANG, John	Publix 884	Jacksonville	FL	32216	(904) 620-0599
Lin, Khin	Publix 644	Jacksonville	FL	32246	(904) 564-3580
MANG, Simon Khai Thawn	Publix 2103	Jacksonville	FL	32081	
ZAW, Than Aye	Publix 1859	JACKSONVILLE	FL	32221	(904) 929-6000
PUI, Te	Publix 128	Jacksonville	FL	32222	(904) 317-5755
VUNG, Cing Khat	Publix 589	Jacksonville	FL	32225	(904) 745-4260
PENG, Thla	Jacksonville NAS	Jacksonville	FL	32212	(904) 542-5311
CEU, Phun	Publix 1842	JACKSONVILLE	FL	32256	(904) 944-8971
AUNG, Soe Moe	Publix 649	Jacksonville	FL	32244	(904) 908-5906

Zenshi Food Service Counters
Franchise List
As of March 31, 2026

WIN, Tun	Publix 1125	Jacksonville	FL	32246	(904) 564-3632
SAN, Kyaw	Publix 849	Jacksonville	FL	32204	(904) 381-8610
KHAI, Tuan Suan	Publix 433	Jacksonville	FL	32250	(904) 223-0286
LIAN, Pau Khan	Publix 019	Jacksonville	FL	32218-0804	(904) 696-3093
LIAN, Pau Khan	Publix 1468	Jacksonville	FL	32225	(904) 564-2448
LAHKUM, Naw Mun	Publix 263	Jacksonville	FL	32210	(904) 777-3122
LAHKUM, Naw Mun	Publix 631	Jacksonville	FL	32210	(904) 388-0512
PARK, Kui Suk	Publix 1105	Jacksonville	FL	32258	(904) 262-5415
THOMAS, May	Publix 1037	Jacksonville	FL	32221	(904) 781-1952
HUANG, Shuling	Publix 1841	Jacksonville	FL	32256-8103	
THANG, Pum Lam	Publix 686	Jacksonville	FL	32218	(904) 751-1445
MANG, Sing Cin	Publix 1066	Jacksonville	FL	32257	(904) 288-6660
MANG, Sing Cin	Publix 1223	Jacksonville	FL	32207	(561) 226-9815
MUAN, Thang Sian	Publix 1177	Jacksonville	FL	32277	(904) 744-7983
SHARE, HtuSam	Publix 1099	Jacksonville	FL	32259	(904) 230-3939
CHEN, Yasu	Publix 716	Jacksonville	FL	32259	(904) 230-3201
WIN, Tun	Publix 552	Jacksonville Beach	FL	32250	(904) 273-7600
LIAN, Thawng Tha	Publix 1140	Jacksonville Beach	FL	32250	(904) 249-1072
THAWNG, Do Lian	Publix 1176	Jasksonville	FL	32217	(904) 419-4807
MANG, Kam Lam	Publix 682	Jensen Beach	FL	34957	(772) 692-7090
KAWAMURA, Renato Akio	Publix 1350	Jensen Beach	FL	34957	(772) 225-3704
KHAI, Lang Lian	Publix 313	Jupiter	FL	33477	(561) 694-2662
KHAI, Lang Lian	Publix 401	Jupiter	FL	33477	(561) 743-7400
MAUNG, Shar Shar	Publix 638	Jupiter	FL	33478	(561) 748-5812
MAUNG, Shar Shar	Publix 756	Jupiter	FL	33458	(561) 799-3181
CIN, Khup Kaih	Publix 1050	Jupiter	FL	33458	(561) 748-5100
CIIN, Martina Cing Ngaih	Publix 1333	Jupiter	FL	33477	(561) 741-6060
THANG, Robert Cingo	Publix 228	Jupiter	FL	33458	(561) 741-1220
MUAN , Cing Sian	Publix 658	Kendall	FL	33156	(305) 670-8929
MIN, Ye	Publix 1813	KEY LARGO	FL	33037-4553	(305) 451-5338
AUNG, Maung Aung	Publix 500	Key West	FL	33040	(305) 296-2225
AUNG, Maung Aung	Publix 1445	Key West	FL	33040	(305) 295-8045
MUNG, Kham Nun	Publix 707	Kissimmee	FL	34741	(407) 933-0367
MUNG, Kham Nun	Publix 1179	Kissimmee	FL	34746	(407) 846-1264
FERNANDEZ, Judith M.	Publix 1607	Kissimmee	FL	34746	(407) 239-1852
LIAN, Sina	Publix 1181	Kissimmee	FL	34746	(407) 343-7575
ZA HRE, Vung Lian Htay	Publix 551	Kissimmee	FL	34747	(407) 239-4989
BATISTA, Janice Angelica	Publix 1194	Kissimmee	FL	34741	(407) 933-0172
AUNG, May Zin	Publix 1849	Kissimmee	FL	34747	(321) 939-1258
NYUNT, Thida	Publix 1408	Kissimmee	FL	34744	(407) 846-6141
LIAN, Angela Ni Siang	Publix 1502	Kissimmee	FL	34744	(407) 348-7686
KHAI, Lang Khai	Publix 447	Lady Lake	FL	32159	(352) 750-2400
KHAI, Lang Khai	Publix 1581	Lady Lake	FL	32159	(352) 751-4346
SU, Thiri	Publix 1192	Lake City	FL	32055	(386) 719-5446
NAING, Win	Publix 698	Lake Mary	FL	32746	(407) 321-7616
HTOO, Kaw	Publix 833	Lake Mary	FL	32746-4867	(407) 322-9985
SAY, Saw Bweh	Publix 1127	Lake Mary	FL	32746	(407) 328-3055
VUNG, Pau Lam	Publix 1304	Lake Mary	FL	32746	(407) 804-1950
AUNG, Hein	Publix 1547	Lake Placid	FL	33852	(863) 699-2081
KYAW, Soe Nyein	Publix 557	Lake Wales	FL	33853	(863) 676-0511
THEO, Rock Lalbiaknipuia	Publix 097	LAKE WALES	FL	33859	(863) 676-1215
KHAI, Thomas Thang Khan	Publix 1384	Lake Worth	FL	33460	(561) 493-5042
Vongpaphan, Kenny James	Publix 184	Lake Worth	FL	33467	(561) 304-0697
HUGEWIN, Brian Wong	Publix 413	Lake Worth	FL	33467	(561) 966-9111
HUGEWIN, Brian Wong	Publix 1144	Lake Worth	FL	33467	(561) 649-7409
HTWE, Thant Zaw	Publix 055	Lake Worth	FL	33461	(561) 965-8700
LIAN, Dal Za	Publix 180	Lake Worth	FL	33463	(561) 969-3880
SIAM, Lal Hmun	Publix 702	Lakeland	FL	33810	(863) 858-1146
SIAM, Lal Hmun	Publix 1410	Lakeland	FL	33809	(863) 858-6861
KHAING, Soe Min	Publix 1171	Lakeland	FL	33812	(863) 644-0386
HLATHAUNG, Amy	Publix 1659	Lakeland	FL	33813	(863) 680-5229
TIAL, Monica	Publix 2043	Lakeland	FL	33813	
YARZAR, Htoo	Publix 1734	Lakeland	FL	33810	(893) 816-0379
MAUNG, Okkar	Publix 1366	Lakeland	FL	33811	(863) 644-1376
HAN, Min	Publix 1270	Lakeland	FL	33803	(863) 683-9860
HAN, Min	Publix 1854	Lakeland	FL	33803	(863) 647-3781
PER, Zing	Publix 1651	Lakeland	FL	33801	(863) 413-0626
PER, Zing	Publix 1707	Lakeland	FL	33809	(863) 816-0246
TUN, Kyaw Thurein	Publix 1600	Lakewood Ranch	FL	34202	(941) 355-8803
MAUNG, Nyint Win	Publix 1142	Land O Lakes	FL	34638	(813) 996-3391
MAWII, Lily Neikip	Publix 877	Land O Lakes	FL	34639	(813) 948-9819
KHAI, Pau Lian	Publix 817	Lantana	FL	33462	(561) 585-4225
OO, K Khine	Publix 1471	Largo	FL	33774	(727) 595-8192
OO, K Khine	Publix 1579	Largo	FL	33774	(727) 517-0847
AUNG, Tial San	Publix 705	Largo	FL	33770-3221	(727) 518-7747
MAUNG, Thet Maung	Publix 1034	Largo	FL	33771	(727) 588-1285
HRE, Jonathan Tin	Publix 1335	Largo	FL	33771	(727) 538-8630
VAAK, David Khua	Publix 1109	Lauderhill	FL	33313	(954) 735-1328
THWE, Mi Mi	Publix 710	Leesburg	FL	34748	(352) 787-0440
THANG, Vial Saluai	Publix 1762	Leesburg	FL	34788	(352) 323-1420
LIAN, Khan Suan	Publix 815	Leesburg	FL	34748	(352) 787-4176
OO, Nay Phone Maw	Publix 162	Lehigh Acres	FL	33971	(239) 226-9701
NGAIHTE, Gin Siamlian	Publix 1443	Lehigh Acres	FL	33936	(239) 368-2241
MUNG, Suankim	Publix 728	Lighthouse Point	FL	33064	(954) 784-3011
KIM, Cin Zuun	Publix 056	Lighthouse Point	FL	33064	(954) 786-3056
THANG, Za Biak	Publix 1135	Lithia	FL	33547	(813) 655-5646
LUAI, Thang Hre	Publix 1670	Lithia	FL	33547	(813) 654-0531
TAN, Andrew Win	Publix 1709	Live Oak	FL	32064	(386) 339-6378
KHUA HLUE, T.	Publix 1432	Longboat Key	FL	34228	(941) 383-1326

Zenshi Food Service Counters
Franchise List
As of March 31, 2026

KYAW, Aye	Publix 1428	Longwood	FL	32779	(407) 865-9847
KU, Kaw	Publix 1668	Longwood	FL	32750	(321) 207-3311
CING, Ning Ngaih Khawm	Publix 865	Longwood	FL	32779	(407) 788-1804
OO, Maung Nay	Publix 1538	Loxahatchee	FL	33470	(561) 795-5201
HAN, Nilar Win	Publix 851	Loxahatchee	FL	33470	(561) 383-6177
PIANG, Lal Siam	Publix 524	Lutz	FL	33558	(813) 264-5591
ZAW, Kyaw	Publix 834	Lutz	FL	33549	(813) 264-5590
PAR, Belle Tial	Publix 1821	Lutz	FL	33559	(813) 949-2812
HRIM, Thang	Publix 1219	Lutz	FL	33558	(813) 948-1275
AYE, Nilar	Publix 831	Lutz	FL	33548	(813) 949-3292
DIM, Gin Lam	Publix 823	Lynn Haven	FL	32444	(850) 271-6180
LIANA, Zir S	Publix 1457	Madeira Beach	FL	33708	(727) 393-5471
TOE, Maung Nay	Publix 1070	Maitland	FL	32751	(407) 599-0202
MUNG, Kham Sian	Publix 1601	Manalapan	FL	33462	(561) 585-6790
WU, Park Hein	Publix 575	Marathon	FL	33050	(305) 289-2920
AUNG, May Thet	Publix 622	Marco Island	FL	34145	(239) 642-2202
AUNG, May Thet	Publix 1655	Marco Island	FL	34145	(239) 394-1086
LIAN, Kham Hau	Publix 1895	Margate	FL	33063	(954) 979-2555
THANG, Cin Suan	Publix 1820	Marion	FL	34476	(352) 351-2815
LIAN, Dal Siam	Publix 738	Melbourne	FL	32935	(321) 242-2678
EN, Gin Khan	Publix 467	Melbourne	FL	32940	(321) 253-6142
HLAING, Nan Moe Sandar	Publix 704	Melbourne	FL	32901	(321) 727-8085
HLAING, Nan Moe Sandar	Publix 1828	Melbourne	FL	32934	(321) 426-2208
ZUM, Thawng Mun	Publix 499	Melbourne Beach	FL	32951	(321) 725-3305
THUAM, Merry	Publix 757	Merritt Island	FL	32952	(321) 452-0288
PU, Kam	Publix 893	Merritt Island	FL	32953	(321) 986-6260
THAN, Nyo Nyo	Publix 581	Miami	FL	33130	(305) 860-2280
HANG, Tang Zou	Publix 328	Miami	FL	33189	(305) 235-2214
HANG, Tang Zou	Publix 478	Miami	FL	33189	(305) 256-3140
LIAN, Thang Suan	Publix 1151	Miami	FL	33155	(305) 559-8030
KHUAL, Suan Khan	Publix 293	Miami	FL	33177	(305) 251-9889
KHUAL, Suan Khan	Publix 1389	Miami	FL	33176	(305) 274-1922
THANG, Ai Zam	Publix 238	Miami	FL	33175	(305) 223-0332
THANG, Ai Zam	Publix 1748	Miami	FL	33165	(305) 553-5392
OO, Ohn Mar	Publix 044	Miami	FL	33155	(305) 266-1950
KYAW, Moe	Publix 031	Miami	FL	33178	(305) 591-2145
THANG, Anthony Pau Kap	Publix 1561	Miami	FL	33125	(305) 424-3300
PUM, Hau	Publix 127	Miami	FL	33145	(305) 445-9661
KHAAN, Zam Teng	Publix 1108	Miami	FL	33177	(305) 234-6038
LIAN, No Khai	Publix 1062	Miami	FL	33187	(305) 971-2623
TUANG, Khup Sian	Publix 1230	Miami	FL	33135	(305) 541-3265
LIAN, Paul Thuam	Publix 1288	Miami	FL	33135	(305) 442-6018
NUAM, Cing Lam	Publix 375	Miami	FL	33174	(305) 552-8733
LIAN, Niang Kaih	Publix 1614	Miami	FL	33136	(305) 374-6806
ZO, Vung Sian	Publix 889	Miami	FL	33185	(305) 207-0481
MOON, Michael	Publix 054	Miami	FL	33130	(305) 860-9477
TUANG, Cin Mun	Publix 327	Miami	FL	33184	(305) 221-1924
LYAN, Zam Za	Publix 069	Miami	FL	33186	(305) 385-0200
LYAN, Zam Za	Publix 657	Miami	FL	33196	(305) 382-5551
LYAN, Zam Za	Publix 835	Miami	FL	33186	(305) 238-1019
HANG, Thang Doe	Publix 655	Miami	FL	33178	(305) 597-8295
DA, Ti	Publix 588	Miami	FL	33185	(305) 222-8120
SUM, Mang Kap	Publix 024	Miami	FL	33196	(305) 382-3002
WIN, Kyaw Zaw	Publix 1009	Miami	FL	33130	(305) 358-1575
THWIN, Myo Mimi	Publix 010	Miami	FL	33144	(305) 266-0713
THET, Bernice May	Publix 1090	Miami	FL	33126	(305) 266-1733
THANG, Lian Thawn	Publix 454	Miami	FL	33180	(305) 931-3761
KHAM, Hang Lian	Publix 1236	Miami	FL	33181	(305) 893-6781
AYE, Than Than	Publix 529	Miami	FL	33193	(305) 383-6990
AYE, Than Than	Publix 1429	Miami	FL	33165	(305) 595-4502
DAL, Lian Za	Publix 1397	Miami	FL	33132	(305) 358-3433
KAP, Pau Za	Publix 1657	Miami	FL	33176	(305) 964-4921
KAP, Pau Za	Publix 1803	Miami	FL	33186	(305) 385-0601
BIEH, Thang Za	Publix 223	Miami	FL	33176	(305) 255-8005
BIEH, Thang Za	Publix 590	Miami	FL	33157	(305) 971-9790
THANG, Biak Lian	Publix 1467	Miami	FL	33174	(305) 207-2329
KIM, Thang Muan	Publix 1273	Miami	FL	33187	(305) 256-3102
LUN, Cing Za	Publix 550	Miami	FL	33176	(305) 273-2185
MUANG, Vungh Sian	Publix 714	Miami	FL	33137	(305) 573-8601
AUNG, May May	Publix 1209	Miami Beach	FL	33139	(305) 535-2212
AUNG, May May	Publix 1382	Miami Beach	FL	33141	(305) 864-7405
MANG, Thang Tul	Publix 091	Miami Beach	FL	33139	(305) 534-4621
TIM, Than	Publix 621	Miami Beach	FL	33139	(305) 535-4268
PAU, Enn	Publix 629	Miami Gardens	FL	33169	(305) 654-5771
LIU, Guokuan	Publix 1129	Miami Lakes	FL	33014	(305) 818-8830
MUNG, Cin Khan	Publix 794	Miami Shores	FL	33138	(305) 751-4075
NUAM, Lal	Publix 736	Middleburg	FL	32068	(904) 291-5123
NGUYEN, Long Kim	Publix 1807	Milton	FL	32570	(850) 626-2412
LI, Jinda	Publix 1759	Minneola	FL	34711	(352) 241-9002
SHEING, Sai Saw	Publix 1699	Miramar	FL	33027	(954) 602-5242
VUNG, Cing	Publix 674	Miramar	FL	33029	(954) 447-3334
KHAI, Pau Lian	Publix 673	Miramar	FL	33027	(954) 447-9212
PAU, Josef Lun	Publix 167	Miramar	FL	33023	(954) 966-9100
PAU, Josef Lun	Publix 368	Miramar	FL	33025	(954) 437-6124
PAU, Josef Lun	Publix 652	Miramar	FL	33025	(954) 441-7918
NU, Kim	Publix 1275	Mount Dora	FL	32757	(352) 383-0740
MYERS, Paz Lamban	Publix 1269	Mount Dora	FL	32757	(352) 383-0368
LYAN, Michael	Publix 791	Mulberry	FL	33860	(863) 644-4166
LIAN, Kham Hau	Publix 822	N Lauderdale	FL	33068	(954) 722-0599

Zenshi Food Service Counters
Franchise List
As of March 31, 2026

MANG, Tun Khan	Publix 294	N. Lauderdale	FL	33068	(954) 973-3337
PAU, Kham Suan	Publix 179	N. Palm Beach	FL	33408	(561) 622-0804
MON, Ei Zar	Publix 414	Naples	FL	34110	(239) 592-5005
MON, Ei Zar	Publix 635	Naples	FL	34110	(941) 596-0479
KHUP, Khan Za	Publix 1208	Naples	FL	34116	(239) 304-3394
MOE, Aye Chan	Publix 453	Naples	FL	34119	(239) 352-2200
MOE, Aye Chan	Publix 488	Naples	FL	34109	(239) 435-0387
OO, May Sabe	Publix 1752	Naples	FL	34112	(813) 712-3054
BESSENT, Kannika	Publix 1730	Naples	FL	34114	(239) 732-5978
BEITA, Thaizi Zalen	Publix 032	Naples	FL	34112-6725	(239) 774-1072
BEITA, Thaizi Zalen	Publix 516	NAPLES	FL	34113	(239) 775-7383
BEITA, Thaizi Zalen	Publix 811	Naples	FL	34114	(239) 774-5080
WIN, Shwe T	Publix 1458	Naples	FL	34104	(239) 732-7216
WIN, Zin N	Publix 676	Naples	FL	34109	(239) 513-1356
WIN, Zin N	Publix 1434	Naples	FL	34102	(239) 262-0125
AUNG, Alex	Publix 1527	Naples	FL	34120	(239) 455-1654
AUNG, Alex	Publix 2018	Naples	FL	34120	(863) 688-1188
OO, Ryan	Publix 410	Naples	FL	34104	(239) 455-3001
OO, Tin Nyo	Publix 781	Naples	FL	34119	(239) 348-2931
OO, Tin Nyo	Publix 1337	Naples	FL	34108	(239) 596-0403
NU, Cing	Publix 896	Navarre	FL	32566	(850) 515-0999
NU, Cing	Publix 1835	Navarre	FL	32566-3013	(850) 936-4023
SOE, Myint	Publix 1367	Neptune Beach	FL	32266-4026	(904) 241-0944
MAWI, Sui Dim	Publix 1753	Neptune Beach	FL	32266-4024	(904) 242-5197
SAN , Myo	Publix 643	New Port Richey	FL	34655	(727) 375-5377
PHUE, Spea	Publix 810	New Port Richey	FL	34654	(727) 848-4185
UK, Van Hnuai	Publix 1020	New Port Richey	FL	34652	(727) 848-6521
WIN, Khin Yu Yu	Publix 102	New Port Richey	FL	34654	727.862.5866
WIN, Khin Yu Yu	Publix 420	New Port Richey	FL	34655	(727) 372-7400
PREE, Po	Publix 1649	New Smyrna Beach	FL	32168	(386) 427-5327
MOUH, Mouh	Publix 229	New Smyrna Beach	FL	32169	(386) 428-6465
MARAN, Hkamhtun	Publix 2012	Newberry	FL	32669	(352) 660-6062
MARAN, Tangnyang	Publix 690	Newberry	FL	32669	(352) 332-5114
SANG, Zam Sian	Publix 1461	Niceville	FL	32578	(850) 678-3002
AUNG, Tun Min	Publix 1414	Nokomis	FL	34275	(941) 484-2606
THANG, Hau Kap	Publix 1352	North Fort Myers	FL	33917	(239) 567-1827
CIN, Thang Khan	Publix 1407	North Fort Myers	FL	33903	(239) 543-2203
KHAM, Hang Lian	Publix 1003	North Miami	FL	33161	(305) 891-1024
ZAM, Hau Go	Publix 1715	North Miami Beach	FL	33162	(305) 947-5485
NUAM, Cing Vang	Publix 669	North Miami Beach	FL	33179	(305) 945-7119
HANG, Kham Kap	Publix 1017	North Miami Beach	FL	33181	(305) 354-2171
CIN, Nang Khan	Publix 699	North Palm Beach	FL	33408	(561) 842-1193
Naing, Nay Myo	Publix 1180	North Port	FL	34288	(941) 240-5023
MAUNG, Khin Maung	Publix 792	North Port	FL	34287	(941) 426-6672
MAUNG, Khin Maung	Publix 1287	North Port	FL	34287	(941) 426-2167
MIN, Soe	Publix 1433	North Venice	FL	34275	(941) 484-8426
RING, Tsin Pan	Publix 1662	Oakland Park	FL	33334	(954) 776-5435
DULA, Lalzam	Publix 750	Oakland Park	FL	33334	(954) 491-9330
VUNG, Don Lian	Publix 1750	Ocala	FL	34479	(352) 620-1451
PABAWI, Kinglone	Publix 061	Ocala	FL	34470	(352) 671-3443
PABAWI, Kinglone	Publix 1289	Ocala	FL	34471	(352) 351-2355
KIM, Kham Sian	Publix 733	Ocala	FL	34472	(352) 687-8200
HUAI, Lun Man	Publix 1477	Ocala	FL	34471	(352) 237-3748
LIAN, Khan Suan	Publix 1844	Ocala	FL	34471	(352) 368-2855
BETANCOURT, Antonio	Publix 856	Ocala	FL	34474	(352) 873-1936
BETANCOURT, Antonio	Publix 1201	Ocala	FL	34481	(352) 291-0296
BETANCOURT, Antonio	Publix 1365	Ocala	FL	34482	(352) 622-1318
OO, Nan Htike	Publix 542	Ocoee	FL	34761	(407) 656-9343
VAN HMUN MAWI, Joseph C.	Publix 405	Ocoee	FL	34761	(407) 299-4550
VAN HMUN MAWI, Joseph C.	Publix 761	Ocoee	FL	34761	(407) 522-1808
KYAW, MICHAEL AUNG	Publix 1174	Ocoee	FL	34761	(407) 654-1356
GRANDEZ, Nelida M.	Publix 1513	Odessa	FL	33556	(727) 375-5249
MAR, The	Publix 1611	Odessa	FL	33556	(813) 926-1182
TUN, Saw Tun	Publix 1702	Odessa	FL	33556	(813) 926-3660
MUNG, Cin Deih	Publix 118	Okeechobee	FL	34974-6247	(863) 763-3500
HTOO, Hser Tha You	Publix 422	Orange City	FL	32763	(386) 774-8255
U, Ye Myint	Publix 668	Orange Park	FL	32073	(904) 276-6016
CIN, Zam Sian	Publix 1115	Orange Park	FL	32065	(904) 276-6029
CIN, Zam Sian	Publix 1169	Orange Park	FL	32065	(904) 291-5108
KIM, Peter	Publix 502	Orange Park	FL	32003	(904) 269-3600
SWE, Myat	Publix 1015	Orlando	FL	32829	(407) 277-8095
SIT, Hmun Hmun	Publix 2022	Orlando	FL	32835-6346	
MAUNG, Rai Zan	Publix 659	Orlando	FL	32804	(407) 872-0173
MAUNG, Rai Zan	Publix 662	Orlando	FL	32803	(407) 896-8154
NIANG, Hau Dim	Publix 1101	Orlando	FL	32824	(407) 856-6040
NIANG, Hau Dim	Publix 1625	Orlando	FL	32824	(407) 816-8064
HTIKE, Than	Publix 427	Orlando	FL	32837	(407) 850-4351
HTIKE, Than	Publix 654	Orlando	FL	32837	(407) 816-0884
DE ALMEIDA, Dimerson Fujino	Publix 1430	Orlando	FL	32832	(407) 240-2102
WYNN, Nwe Ni	Publix 830	Orlando	FL	32812	(407) 850-1018
MAN, Lal Nei	Publix 886	Orlando	FL	32832	(407) 277-1089
MYINT, Hla Hla	Publix 436	Orlando	FL	32806	(407) 872-0395
HNUN, Hnun	Publix 133	Orlando	FL	32819	(407) 909-8080
HEYL, Chadarat Khrueawan	Publix 1852	ORLANDO	FL	32832	(407) 241-0260
OO, Myat Noe	Publix 741	Orlando	FL	32819	(407) 226-3315
KYAW, Moe	Publix 1845	ORLANDO	FL	32804	(689) 206-8880
NYEIN, Thi Thi	Publix 331	Orlando	FL	32811	(407) 293-7673
NYEIN, Thi Thi	Publix 1754	Orlando	FL	32806.	(407) 492-8328
KYAW, May Thiri	Publix 1338	Orlando	FL	32825	(407) 207-6107

Zenshi Food Service Counters
Franchise List
As of March 31, 2026

LI, Jinda	Publix 1810	Orlando	FL	32836	(407) 605-4044
THANG, Mas Van Uk	Publix 1610	Orlando	FL	32821	(407) 465-1139
TIAL, Sung Hnem	Publix 1191	Orlando	FL	32819	(407) 996-8400
ZAW, Danny Than	Publix 812	Orlando	FL	32821	(407) 238-9924
SAW, George	Publix 607	Orlando	FL	32828	(407) 277-3117
SAW, George	Publix 1122	Orlando	FL	32825	(407) 277-0635
LWIN, Thet	Publix 692	Orlando	FL	32812-2709	(407) 282-7997
LWIN, Thet	Publix 1131	Orlando	FL	32801	(407) 872-7201
NO, Niang Ngaih	Publix 1048	Orlando	FL	32814	(407) 897-7363
LIAN, Angela Ni Siang	Publix 1501	Orlando	FL	32822	(407) 277-3871
OO, Khun Win	Publix 1440	Orlando	FL	32826	(407) 482-1244
MUNG, Gin Pian	Publix 1439	Orlando	FL	32819	(407) 226-9882
KYAW, MICHAEL AUNG	Publix 605	Orlando	FL	32839	(407) 816-8335
LAL, David	Publix 1092	Orlando	FL	32828	(407) 277-1043
LAL, David	Publix 1789	Orlando	FL	32817	(407) 657-6777
CIN, Gin Thawn	Publix 897	Orlando	FL	32820-0858	(407) 568-0858
SAY, Henry	Publix 660	Ormond Beach	FL	32174	(386) 615-8885
UK, Khrih Nun	Publix 1290	Ormond Beach	FL	32176	(386) 441-9839
UK, Khrih Nun	Publix 1755	Ormond Beach	FL	32176	(386) 672-8643
CHUAN, Windy Lal Hma	Publix 1712	Ormond Beach	FL	32174	(386) 672-5724
THU, Aung Kyaw	Publix 446	Ormond Beach	FL	32174	(386) 673-5380
AUNG, Tun Min	Publix 1639	Osprey	FL	34229	(941) 918-2647
Mang, Nangsuan	Publix 1559	Oviedo	FL	32766	(407) 366-4727
KHAI, Pau Dem	Publix 1295	Oviedo	FL	32765	(407) 673-0829
SEIN, Tin	Publix 493	Oviedo	FL	32765	(407) 366-9740
SEIN, Tin	Publix 675	Oviedo	FL	32765	(407) 971-1774
OO, Zaw Naing	Publix 458	Oviedo	FL	32765	(407) 366-9480
PYONE, Hnin Ei	Publix 1889	Oviedo	FL	32765	(407) 366-8119
KHAM, Pum Suan	Publix 1572	Pace	FL	32571	(850) 994-6552
KAP, Tun Cin	Publix 1225	Pace	FL	32571-1403	(850) 994-4816
TUN, Kyaw Khine	Publix 727	Palatka	FL	32177	(386) 312-8345
BAWI, Lang	Publix 779	Palm Bay	FL	32909	(321) 725-2420
HAU, Pau Lian	Publix 1899	Palm Bay	FL	32907	
SWE, Myint Myint	Publix 1898	Palm Bay	FL	32909	(321) 327-6140
HLAING, Mee Kyu	Publix 215	Palm Bay	FL	32905	(321) 724-4724
HTWE, San Dar	Publix 424	Palm Bay	FL	32907	(321) 727-3654
PAU, Zam Suan	Publix 1395	Palm Beach	FL	33480	(561) 655-4120
MUNG, Joseph Zamsan	Publix 434	Palm Beach Gardens	FL	33410	(561) 625-9632
SING, Khen Kim	Publix 1368	Palm Beach Gardens	FL	33410	(561) 622-1047
AYE, San San	Publix 1618	Palm Beach Gardens	FL	33418	(561) 626-1950
PIANG, Pau Khan	Publix 212	Palm Beach Gardens	FL	33410	(561) 622-3584
PIANG, Pau Khan	Publix 1006	Palm Beach Gardens	FL	33418	(561) 622-1764
PAU, Kham Suan	Publix 2021	Palm Beach Gardens	FL	33410	(561) 624-0935
LWIN, Tun	Publix 577	Palm City	FL	34990	(772) 781-3012
LWIN, Tun	Publix 1014	Palm City	FL	34990	(772) 232-4056
MYINT, Sein Maung	Publix 1339	Palm Coast	FL	32137	(386) 445-2628
PAR, Emily Sui Nuam	Publix 1493	Palm Coast	FL	32137	(386) 597-4776
LORLA, Saw	Publix 1042	Palm Coast	FL	32137	(386) 445-2193
OO, Khatta Myint	Publix 1138	Palm Coast	FL	32164	(386) 437-2426
TIN, Garrett San-Thein	Publix 1341	Palm Harbor	FL	34685	(727) 784-4180
LIAN, David Thar	Publix 415	Palm Harbor	FL	34684	(727) 789-1920
LIAN, David Thar	Publix 1011	Palm Harbor	FL	34683	(727) 781-7481
LIAN, David Thar	Publix 1340	Palm Harbor	FL	34684	(727) 771-0892
THIRI, Chaw	Publix 497	Palm Harbor	FL	34685	(727) 785-5521
LIN, Harry	Publix 891	Palm Harbor	FL	34684	(727) 787-8802
PINE, Calvin Thuring	Publix 1666	Palmetto	FL	34221	(941) 722-0693
OO, Thet Zin	Publix 1342	Palmetto	FL	34221	(941) 721-8548
LEWIS, James Tin	Publix 481	Panama City	FL	32405	(850) 747-9780
LEWIS, James Tin	Publix 2034	PANAMA CITY	FL	32405-2734	(850) 772-6597
MANGNGAIH, Nang	Publix 1875	Panama City	FL	32404-9325	(850) 772-6111
LIAN, Thang Deih	Publix 1005	Panama City Beach	FL	32413	(850) 233-4392
ULUNG, Nawsan	Publix 1241	Panama City Beach	FL	32407	(850) 236-4515
MANGNGAIH, Nang	Publix 1173	Panama City Beach	FL	32408	(850) 236-4415
DIM, Lai	Publix 1137	Parkland	FL	33067	(954) 575-8225
PINE, Calvin Thuring	Publix 1848	Parrish	FL	34219	(941) 981-6157
WIN, Than Zaw	Publix 1152	Parrish	FL	34219	(941) 776-8326
TUN, Phyo Myint	Publix 1305	Parrish	FL	34219	(941) 776-8084
ME, Me	Patrick AFB	Patrick AFB	FL	32925	(321) 494-5841
SUAN, Hau Z	Publix 1570	Pembroke Pines	FL	33026	(954) 442-7391
KHAI, Kap Lam	Publix 1068	Pembroke Pines	FL	33027	(954) 431-2094
KO, Nwe Ni	Publix 303	Pembroke Pines	FL	33027	(954) 437-9500
KO, Nwe Ni	Publix 1795	Pembroke Pines	FL	33027	(954) 432-1075
LIAN, Cin Khaw	Publix 012	Pembroke Pines	FL	33024	(954) 433-4400
SING, Lian En	Publix 528	Pembroke Pines	FL	33029	(954) 430-6100
LIAN, Mang Kap	Publix 1522	Pensacola	FL	32501	(850) 434-3469
KHAM, Pum Suan	Publix 1316	Pensacola	FL	32504	(850) 484-9646
NUNG, Suan Sian Tung	Publix 1879	PENSACOLA	FL	32506	(850) 823-5871
MUNG, LUAN KHEN	Publix 1318	Pensacola	FL	32526	(850) 941-8101
Qader, Matthew M	Publix 1746	Pensacola	FL	32526	(850) 944-8833
KAP, Tun Cin	Publix 1317	Pensacola	FL	32514	(850) 473-5000
LIAN, Gin Sawm	Publix 1296	Pensacola	FL	32507	(850) 492-5090
KHAM, Do Khan	Publix 1343	Pensacola	FL	32534	(850) 473-5020
NU, Cing	Pensacola NAS	Pensacola	FL	32507	(850) 452-6880
BIEH, Thang Za	Publix 1423	Pinecrest	FL	33156	(305) 251-0911
KHAI, Mang Khan	Publix 111	Pinellas Park	FL	33781	(727) 546-5866
MYINT, John Hla	Publix 1344	Pinellas Park	FL	33781	(727) 546-4870
LIN, Swe Zin	Publix 697	Placida	FL	33946	(941) 698-1699
UK, David Vanlian	Publix 793	Plant City	FL	33563	(813) 719-6933
UK, David Vanlian	Publix 1212	Plant City	FL	33563	(813) 752-2672

Zenshi Food Service Counters
Franchise List
As of March 31, 2026

KHUAL, Thang Lian	Publix 1040	Plantation	FL	33324	(954) 475-5285
KO, Naing Myo	Publix 747	Plantation	FL	33325	(954) 472-5110
KAP, Gin Cin	Publix 645	Plantation	FL	33322	(954) 452-1362
CING , Vung Sian	Publix 1345	Plantation	FL	33324	(954) 577-0542
TUANG, Thang Lam	Publix 703	Plantation	FL	33317	(954) 327-9705
DAL, Khup Sian	Publix 1776	Plantation	FL	33324	(954) 473-4000
AUNG, Ye Htun	Publix 758	Poinciana	FL	34759-3408	(321) 697-5487
MUNG, Cia	Publix 693	Pompano Beach	FL	33060	(954) 784-3277
NIANG, Vung Lam	Publix 748	Pompano Beach	FL	33069	(954) 975-0119
KHUAL, Thang Sut	Publix 2007	POMPANO BEACH	FL	33064-6605	
THET, Nan Sabal	Publix 1036	Pompano Beach	FL	33062-7233	(954) 784-3725
MYAT, Ronny Tun Nyein	Publix 1393	Pompano Beach	FL	33062	(954) 786-7964
MANG, Simon Khai Thawn	Publix 1701	Ponte Vedra	FL	32081	(904) 826-3356
RUAL, Than	Publix 1028	Ponte Vedra	FL	32082	(904) 273-6565
RUAL, Than	Publix 1243	Ponte Vedra	FL	32081	(904) 825-0263
HTWEE, Saw Aung	Publix 1437	Ponte Vedra Beach	FL	32082	(904) 280-5440
OO, Naing Lin	Publix 755	Port Charlotte	FL	33980-2152	(941) 629-1100
HTWE, Kyaw Zin	Publix 1438	Port Charlotte	FL	33954	(941) 235-4460
LWIN, Tint	Publix 1013	Port Charlotte	FL	33948-2008	(941) 235-2266
WIN, Kyaw Tun	Publix 778	Port Charlotte	FL	33981	(941) 697-0279
SUI, Rebecah Beku	Publix 1450	Port Orange	FL	32128	(386) 760-7332
CEU, Than	Publix 1259	Port Orange	FL	32127	(386) 788-2220
HTET, Lin Myat	Publix 767	Port Richey	FL	34668	(727) 844-3955
MANGVE, Christopher William	Publix 2092	Port Saint Lucie	FL	34987	
THANG, Tuan Do	Publix 340	Port Saint Lucie	FL	34952	(772) 337-1600
TUANG, Lam	Publix 1030	Port St. Lucie	FL	34987	(772) 345-9900
MANGVE, Christopher William	Publix 1472	Port St. Lucie	FL	34986	(772) 345-9500
AUNG, Khant Min	Publix 1128	Port St. Lucie	FL	34984	(772) 336-3182
PAU, John Thang	Publix 819	Port St. Lucie	FL	34983	(772) 878-6119
PAU, John Thang	Publix 855	Port St. Lucie	FL	34952	(772) 336-3833
THANG, Tuan Do	Publix 1378	Port St. Lucie	FL	34952	(772) 335-8441
MANG, Kap Sian	Publix 1737	Port St. Lucie	FL	34986	(772) 878-7393
THANG, Robert Cingo	Publix 1284	Port St. Lucie	FL	34953	(772) 621-8473
MAUNG, Eric Julian	Publix 1557	Punta Gorda	FL	33950	(941) 575-0793
OO, Naing Lin	Publix 266	Punta Gorda	FL	33950-5933	(941) 575-4740
KIMA, Biak Tha	Publix 890	Riverview	FL	33578	(813) 661-3286
PHOME, Mark	Publix 1032	Riverview	FL	33578	(813) 741-0693
PHOME, Mark	Publix 1523	Riverview	FL	33578	(813) 671-9121
ROBIN, Con Lianbik	Publix 1371	Riverview	FL	33578	(813) 626-7104
LUAI, Thang Hre	Publix 712	Riverview	FL	33569	(813) 672-4353
CIN, Nang Khan	Publix 1359	Riviera Beach	FL	33404	(561) 841-3058
EN, Gin Khan	Publix 784	Rockledge	FL	32955	(321) 636-0282
TUANG, Thang Sawm	Publix 1398	Rockledge	FL	32955	(321) 433-0936
TUANG, Thang Sawm	Publix 1805	Rockledge	FL	32955	(321) 631-3480
MUNG, Kap Zo	Publix 1851	Royal Palm Beach	FL	33411	(561) 790-2111
MARAN, Brangshawng	Publix 620	Royal Palm Beach	FL	33411	(561) 792-2100
SHARI, Sut Naw	Publix 2113	Saint Augustine	FL	32092	
TIN, Saw Darbu	Publix 1617	Saint Augustine	FL	32095	(904) 826-3537
AUNG, Andrew	Publix 2014	Saint Augustine	FL	32092	
OO, Khin Nwe	Publix 1530	Saint Augustine	FL	32086	(904) 797-1111
OO, Khin Nwe	Publix 2096	Saint Augustine	FL	32080-6731	
HTIKE, Tun Nanda	Publix 1829	Saint Augustine	FL	32086	(904) 808-9923
SOUVANNASOTH, Pom	Publix 1729	Saint Augustine	FL	32092	(904) 940-3357
HNUN, Hnun	Publix 1850	SAINT CLOUD	FL	34771	(407) 892-0595
CUNG, Ting Peng	Publix 1766	Saint Johns	FL	32259	(904) 824-3334
THANG, Sui Bik	Publix 1684	Saint Johns	FL	32259	(904) 260-6565
SUUN, Dongh Kheen	Publix 1456	Saint Petersburg	FL	33704	(727) 526-3019
KHAI, Mang Khan	Publix 2094	Saint Petersburg	FL	33710	
MANG, Lal Hrin	Publix 1541	Saint Petersburg	FL	33711	(727) 864-0079
THUAI, Cecilia Ngun Hle	Publix 1742	San Antonio	FL	33576	(352) 588-1170
CING, Hau Lam	Publix 1864	SANFORD	FL	32771	(407) 430-4036
LIAN, Mang Sawm	Publix 641	Sanford	FL	32771	(407) 321-0423
MADERAZO, Rudivino Gracio Espinoza	Publix 153	Santa Rosa Beach	FL	32459	(850) 534-4565
TOHING, Kam Khan Kim	Publix 1258	Santa Rosa Beach	FL	32459	(850) 267-0582
HA, Sai Thi	Publix 1797	Sarasota	FL	34238	(941) 924-0031
KEUH, Thang	Publix 1385	Sarasota	FL	34233-1001	(941) 925-0269
LINHTUN, James	Publix 409	Sarasota	FL	34238	(941) 925-4778
AUNG, Htay	Publix 696	Sarasota	FL	34231	(941) 922-7644
AYE, Than Nyunt	Publix 1669	Sarasota	FL	34237	(941) 330-9771
LYNN, Tin Yupar	Publix 828	Sarasota	FL	34243	(941) 358-1169
PAING, Aung Phyo	Publix 1644	Sarasota	FL	34231	(941) 921-3766
LIN, Zaw Bo Bo	Publix 148	Sarasota	FL	34232	(941) 377-4405
AUNG, Tun Min	Publix 1882	SARASOTA	FL	34240	(941) 271-6984
WIN, Tun	Publix 022	Sarasota	FL	34233	(941) 926-8297
WIN, Tun	Publix 361	Sarasota	FL	34233	(941) 378-2111
WIN, Tun	Publix 1267	Sarasota	FL	34241	(941) 371-4276
MYINT, Zarchi M	Publix 555	Sarasota	FL	34239	(941) 316-0616
MYINT, Zarchi M	Publix 1372	Sarasota	FL	34237	(941) 366-4089
MYINT, Zarchi M	Publix 1781	Sarasota	FL	34231	(941) 927-9651
KHUA HLUE, T.	Publix 1023	Sarasota	FL	34236-2428	(941) 366-3270
THAWNG, JC	Publix 1214	Satellite Beach	FL	32937	(321) 773-0836
MUNG, Suan Khen	Publix 1058	Satellite Beach	FL	32937	(321) 773-2915
TUANG, Hau	Publix 591	Sea Ranch Lakes	FL	33308	(954) 784-3707
KIM, Thang Za	Publix 287	Sebastian	FL	32958	(772) 589-5110
KIM, Thang Za	Publix 772	Sebastian	FL	32958	(772) 581-5755
KIM, Thang Za	Publix 1035	Sebastian	FL	32958	(772) 581-5710
PUM, Michael Lian Za	Publix 1347	Sebring	FL	33870	(863) 385-2025
AUNG, Hein	Publix 1517	Sebring	FL	33870	(863) 314-8746
HRAM, Mang Nei	Publix 103	Seffner	FL	33584	(813) 684-6029

Zenshi Food Service Counters
Franchise List
As of March 31, 2026

OO, K Khine	Publix 751	Seminole	FL	33776	(727) 593-7794
AUNG, Tial San	Publix 095	Seminole	FL	33777	(727) 397-4223
LIANA, Zir S	Publix 1320	Seminole	FL	33772	(727) 393-9680
SMITH, Paul	Publix 768	South Daytona	FL	32119	(386) 756-9969
LUAI, George Kio	Publix 1348	South Pasadena	FL	33707	(727) 341-1790
THANG, Van Lalnun	Publix 1871	Spring Hill	FL	34606-4553	(352) 683-6040
TIN, Nyunt	Publix 457	Spring Hill	FL	34606	(352) 597-8500
BAT, Kawl	Publix 630	Spring Hill	FL	34609-8199	(352) 666-2000
BAT, Kawl	Publix 1282	Spring Hill	FL	34609	(352) 797-8027
ZAM, Hram Nei	Publix 813	Spring Hill	FL	34609	(352) 688-0161
MAW TANG, Lubu	Publix 1239	St. Augustine	FL	32092	(904) 940-2889
SHARI, Sut Naw	Publix 1278	St. Augustine	FL	32084	(904) 819-6518
SAY, Henry	Publix 099	St. Augustine	FL	32086	(904) 808-0514
PARK, Kui Suk	Publix 1231	St. Augustine	FL	32084	(904) 827-1448
NYUNT, Thida	Publix 1216	St. Cloud	FL	34772	(407) 957-8888
SAN, Maw	Publix 235	St. Cloud	FL	34769	(407) 498-3070
SAN, Maw	Publix 1045	St. Cloud	FL	34771	(407) 892-0595
MIN, Pyae Phyo	Publix 1667	St. Johns	FL	32259	(904) 230-1347
SUUN, Dongh Kheen	Publix 1531	St. Petersburg	FL	33701	(727) 822-1053
MAWI, Mary Zung Rem	Publix 140	St. Petersburg	FL	33716	(727) 540-1660
GYI, Khin Maung	Publix 640	St. Petersburg	FL	33704	(727) 895-1670
KHAI, Mang Khan	Publix 1628	St. Petersburg	FL	33710	(727) 520-8101
SUM, Pau Khan	Publix 1199	St. Petersburg	FL	33710	(727) 344-1216
GABYAR, Lamin	Publix 688	St. Petersburg	FL	33702	(727) 578-2833
CHUM, Than	Publix 395	St. Petersburg	FL	33716	(727) 576-5858
CHUM, Than	Publix 1394	St. Petersburg	FL	33713	(727) 327-3039
KHUP, Vincent Sai	Publix 028	St. Petersburg	FL	33701	(727) 822-1125
MANG, Lal Hrin	Publix 1321	St. Petersburg	FL	33712	(727) 864-2030
KAWAMURA, Renato Akio	Publix 1237	Stuart	FL	34994	(772) 692-5025
KHAI, Ngin Khawm	Publix 1774	Stuart	FL	34997	(772) 463-5950
KHAI, Ngin Khawm	Publix 1783	Stuart	FL	34997	(772) 403-6329
TUTTLE, Orathai	Publix 749	Stuart	FL	34994	(772) 221-3922
MUNG, Thang Suan	Publix 1093	Stuart	FL	34997	(772) 221-8135
THANG, Za Biak	Publix 732	Sun City Center	FL	33573	(813) 633-3440
MAR, Thi Thi	Publix 1536	Sunny Isles Beach	FL	33160	(305) 935-1556
KHAM, Joseph	Publix 777	Sunrise	FL	33351	(954) 748-0418
MANG, Thang Sawm	Publix 239	Sunrise	FL	33351	(954) 748-5300
MANG, Thang Sawm	Publix 509	Sunrise	FL	33323	(954) 851-1000
LANG, Nang Do	Publix 073	Surfside	FL	33154	(305) 865-1263
GREGORIO, Kaw Kaw	Publix 857	Tallahassee	FL	32308	(850) 878-4899
GREGORIO, Kaw Kaw	Publix 1401	Tallahassee	FL	32308	(850) 402-0141
KAM, Thang Deih	Publix 1573	Tallahassee	FL	32301	(850) 577-1915
TUAN KHAI, Nang	Publix 887	Tallahassee	FL	32301	(850) 219-1150
THUREIN, Tun	Publix 1656	Tallahassee	FL	32303	(850) 562-0088
SIE, S. Be	Publix 852	Tallahassee	FL	32303	(850) 222-1975
OO, Htun Ni	Publix 1306	Tallahassee	FL	32309-7134	(850) 893-0137
LIAN, Thang Deih	Publix 610	Tallahassee	FL	32305	(850) 878-1133
GO, Vungh Kap	Publix 1051	Tallahassee	FL	32301	(850) 219-6211
KHAI, Dal Sawm	Publix 782	Tallahassee	FL	32304	(850) 575-3929
LAHTAW, GUM SENG	Publix 1427	Tallahassee	FL	32308	(850) 523-9851
LAHTAW, GUM SENG	Publix 1836	TALLAHASSEE	FL	32312-9118	(448) 206-6622
MUNG, Khen Lian	Publix 533	Tallahassee	FL	32312	(850) 668-5702
PAU, Suan Thawn	Publix 302	Tamarac	FL	33321	(954) 721-7800
KAP, Gin Cin	Publix 242	Tamarac	FL	33321	(954) 726-1990
MANG, Tun Khan	Publix 787	Tamarac	FL	33319	(954) 735-4808
LEONG, Richard Kyi Sein	Publix 611	Tampa	FL	33629	(813) 258-9801
LEONG, Richard Kyi Sein	Publix 628	Tampa	FL	33606	(813) 251-1173
LEONG, Richard Kyi Sein	Publix 1721	Tampa	FL	33602	(813) 221-4121
THANG, Lal	Publix 876	Tampa	FL	33647	(813) 986-1239
SIN, Mawi Eng	Publix 1373	Tampa	FL	33647-2001	(813) 972-2784
THANG, Lal	Publix 1088	Tampa	FL	33635	(813) 855-7913
MYINT, Ohn	Publix 1722	Tampa	FL	33611	(813) 831-6890
MYINT, Ohn	Publix 1808	Tampa	FL	33611	(813) 832-1779
MAWI, Sarah	Publix 1170	Tampa	FL	33625	(813) 265-2372
SUI, Mai Bawi	Publix 1534	Tampa	FL	33625	(813) 264-4457
BIAK, Ma	Publix 399	Tampa	FL	33634	(813) 884-3764
OO, Myo Myea	Publix 754	Tampa	FL	33626	(813) 926-6664
ZAW, Yaw	Publix 1630	Tampa	FL	33613	(813) 631-1269
TIN, Garrett San-Thein	Publix 627	Tampa	FL	33626	(813) 814-0737
LWIN, Aung Soe	MacDill AFB	Tampa	FL	33621	(813) 828-3361
PAR, Van Nei Sui	Publix 840	Tampa	FL	33618-4409	(813) 961-0075
THANG, Thian Lian	Publix 1884	TAMPA	FL	33607	
YADANAR, Hsu	Publix 1506	Tampa	FL	33611	(813) 835-1280
THEIN, Ni Ni	Publix 398	Tampa	FL	33618	(813) 265-3288
THUAI, Cecilia Ngun Hle	Publix 584	Tampa	FL	33647	(813) 631-1911
LEONG, Sarah L	Publix 1182	Tampa	FL	33609	(813) 250-0129
LEONG, Sarah L	Publix 1549	Tampa	FL	33602	(813) 221-1641
LEONG, Sarah L	Publix 1653	Tampa	FL	33609	(813) 281-0769
THANG, Za Ni	Publix 582	Tampa	FL	33614-6053	(813) 673-8900
THANG, Za Ni	Publix 1441	Tampa	FL	33618	(813) 961-0273
RUANG, Tial N.	Publix 1324	Tampa	FL	33615	(727) 785-7473
FUNG, Mary	Publix 511	Tampa	FL	33604	(813) 238-7720
SWEET, Melody Suilenmawi	Publix 144	Tarpon Springs	FL	34689	(727) 934-6535
PIANG, Dal Khan	Publix 1535	Tavares	FL	32778	(352) 742-2439
PUM, Za	Publix 685	Temple Terrace	FL	33617	(813) 984-6411
OO, Myint Lwin	Publix 1578	Temple Terrance	FL	33617	(813) 914-7252
THANG, Robert Cingo	Publix 1049	Tequesta	FL	33469-2372	(561) 741-8147
THAWNG, Timothy Cung Lian	Publix 1487	The Villages	FL	32163	(352) 751-6280
THAWNG, Timothy Cung Lian	Publix 1507	The Villages	FL	32163	(352) 259-8244

Zenshi Food Service Counters
Franchise List
As of March 31, 2026

DAM, Thang Cin	Publix 1080	The Villages	FL	32162-7183	(352) 751-6280
SUNG, Pum Dik	Publix 1741	The Villages	FL	32163	(352) 461-5096
TUANG, Piang Thawn	Publix 4	The Villages	FL	32162	(352) 751-0301
KO, Myat	Publix 1155	The Villages	FL	32162	(352) 391-1802
CIN, Thang L	Publix 1358	Titusville	FL	32796-3004	(321) 264-9263
TUANG, Kam Sian	Publix 1421	Titusville	FL	32780	(321) 267-9606
KAI, Kap Hlei	Publix 1149	Treasure Island	FL	33706	(727) 363-1042
WIN, Khin Yu Yu	Publix 873	Trinity	FL	34655	(727) 375-1179
LIAN, Thang Deih	Tyndall AFB	Tyndall AFB	FL	32403	(850) 283-4825
LIAN, Thang Rih	Publix 878	Valrico	FL	33596	(813) 661-4283
LIAN, Thang Rih	Publix 1277	Valrico	FL	33594-3603	(813) 657-4041
JACKSON , Yitar Hlaing	Publix 734	Venice	FL	34292	(941) 480-0779
SAW, Zay Yar	Publix 1215	Venice	FL	34292	(941) 485-1037
SAW, Zay Yar	Publix 1769	Venice	FL	34293	(863) 284-3312
DANIEL, Thomas	Publix 802	Venice	FL	34285	(941) 484-3346
DANIEL, Thomas	Publix 1683	Venice	FL	34293	(941) 492-6110
HAN, Moe Hein	Publix 284	Vero Beach	FL	32966	(772) 569-1204
HAN, Moe Hein	Publix 1374	Vero Beach	FL	32967	(772) 778-3513
SAW, Tnar	Publix 240	Vero Beach	FL	32960	(772) 778-1984
SAW, Tnar	Publix 1150	Vero Beach	FL	32960-5455	(772) 562-0391
HUANG, Chunhua	Publix 385	Vero Beach	FL	32962	(772) 778-9600
SAUNG, Sai	Publix 898	Vero Beach	FL	32968	(772) 299-6235
SUNG, Van Nei	Publix 1198	Weeki Wachee	FL	34613	(352) 596-5081
KIM, Nuam Khawm	Publix 1894	WELLINGTON	FL	33414	(561) 795-8555
MUNG, Kham Sian	Publix 1862	WELLINGTON	FL	33414-3165	(561) 530-5026
Vongpaphan, Kenny James	Publix 1046	Wellington	FL	33414	(561) 615-1705
MUNG, Go Sian	Publix 1107	Wellington	FL	33414	(561) 422-9640
THANG, Cung Nai	Publix 1877	WESLEY CHAPEL	FL	33545	(813) 953-4409
THANG, Israel Sui Hlei	Publix 006	Wesley Chapel	FL	33543	(813) 994-4566
THANG, Thawng V.	Publix 618	Wesley Chapel	FL	33544	(813) 907-1699
VUNG, Lun Cing	Publix 695	West Melbourne	FL	32904	(321) 722-0022
HLAING, Mee Kyu	Publix 1353	West Melbourne	FL	32904-3805	(321) 676-0115
MUNG, Lian Suan	Publix 1494	West Miami	FL	33144	(305) 265-8019
OO, Maung Nay	Publix 1497	West Palm Beach	FL	33409	(561) 615-6808
PAU, Zam Suan	Publix 848	West Palm Beach	FL	33401	(561) 651-7787
MUNG, Kap Zo	Publix 653	West Palm Beach	FL	33411	(561) 792-2113
CIN, Khup Kaih	Publix 651	West Palm Beach	FL	33412	(561) 799-6802
SOPHAMISAY, Chansouk	Publix 821	West Palm Beach	FL	33417	(561) 683-0412
MEKPISAN, Nachpapon	Publix 894	West Palm Beach	FL	33411	(561) 682-3015
MYINT, Maung Maung	Publix 050	West Palm Beach	FL	33405	(561) 832-1661
KHAI, Pau Lian	Publix 1104	West Palm Beach	FL	33415	(561) 616-2563
HAN, Nilar Win	Publix 371	West Palm Beach	FL	33409	(561) 687-0445
HAN, Nilar Win	Publix 1491	West Palm Beach	FL	33405	(561) 659-2118
MYINT, Maung Maung	Publix 1787	Westlake	FL	33470	(561) 273-1070
THU, May	Publix 759	Weston	FL	33326	(954) 660-0322
THU, May	Publix 1469	Weston	FL	33326	(954) 385-3057
DINLIANA, Su Ieie Maung	Publix 1079	Weston	FL	33331	(954) 217-1195
CIN, In Za	Publix 583	Weston	FL	33326	(954) 384-4190
KIM, Thang	Publix 021	Weston	FL	33327	(954) 217-0022
KO, Myat	Publix 1705	Wildwood	FL	34785	(352) 330-0542
RING, Tsin Pan	Publix 114	Wilton Manors	FL	33311	(954) 565-4891
KHAI, Hau Sian	Publix 774	Wilton Manors	FL	33334	(954) 561-8531
SUAKA, Somkhid	Publix 1711	Wimauma	FL	33598	(813) 634-2117
WONG, Ban Seong	Publix 1106	Windermere	FL	34786	(407) 905-0199
HUANG, Steven	Publix 1396	Windermere	FL	34786	(407) 876-0605
NGUYEN, Joseph An Hong	Publix 881	Winter Garden	FL	34787	(407) 654-7172
NGUYEN, Joseph An Hong	Publix 1158	Winter Garden	FL	34787	(407) 654-6404
KELLEY, Rattana	Publix 1567	Winter Garden	FL	34787	(407) 654-6157
TRIYONO, Winarti	Publix 1843	Winter Garden	FL	34787	(407) 550-9012
PHAIPI, Donald	Publix 1204	Winter Haven	FL	33880	(863) 291-0312
PAIHSAWH, Van Bawi Luai	Publix 425	Winter Haven	FL	33880	(863) 293-3804
HATLANG, Gin Lamtuang	Publix 836	Winter Haven	FL	33881	(863) 299-8000
FANAI, Lalpui Thanga	Publix 448	Winter Haven	FL	33884	(863) 324-1182
AUNG, Win Zaw	Publix 1381	Winter Park	FL	32792-3303	(407) 671-3403
CING, Man Dim	Publix 1388	Winter Park	FL	32789	(407) 622-0302
MANG, Thang Ai	Publix 1387	Winter Park	FL	32792-8999	(407) 671-0211
MANG, Nang	Publix 1488	Winter Park	FL	32789	(407) 644-1204
MUNG, Kap Tung	Publix 062	Winter Springs	FL	32708	(407) 327-9725
MUNG, Kap Tung	Publix 796	Winter Springs	FL	32708	(407) 695-0922
LUAI, Sa Tin	Publix 1792	Yulee	FL	32097	(904) 875-6184
MAWI, Sui Dim	Publix 1406	Yulee	FL	32097	(904) 261-2400
THANG, Cung Nai	Publix 1196	Zephyrhills	FL	33545	(813) 779-2368
SANG, Van Lawm	Publix 1245	Zephyrhills	FL	33541	(813) 783-6871
SANG, Biak Awi	Publix 593	Acworth	GA	30101	(770) 917-4600
THANG, Chan Mawi	Publix 1096	Acworth	GA	30101	(678) 439-3440
KHAI, KAM	Publix 566	Acworth	GA	30101	(770) 218-2420
THANG, Lang Za	Publix 450	Albany	GA	31707	(229) 431-2880
PIANG, Cinthan	Publix 1019	Alpharetta	GA	30004	(770) 360-5591
PIANG, Cinthan	Publix 1060	Alpharetta	GA	30004	(770) 751-5543
LIAN, Steven	Publix 1089	Alpharetta	GA	30005	(770) 360-1025
AUNG, Thiri Pann War	Publix 469	Alpharetta	GA	30022	(770) 751-7980
AUNG, Thiri Pann War	Publix 556	Alpharetta	GA	30004	(770) 752-4960
AUNG, Thiri Pann War	Publix 762	Alpharetta	GA	30004	(770) 751-0312
TIAM, Bawi Peng Bual	Publix 721	Alpharetta	GA	30022	(770) 751-7991
ZHOU, Guoping	Publix 616	Alpharetta	GA	30004	(770) 754-4321
BIAK, Eliza	Publix 1146	Athens	GA	30605-6811	(706) 227-6260
MUAN, Thang Sian	Publix 451	Athens	GA	30606	(706) 208-3700
TLAN, Henry	Publix 1838	Athens-Clarke	GA	30606	(762) 400-8555
PARK, Brian	Publix 776	Atlanta	GA	30308	(404) 881-1750

Zenshi Food Service Counters
Franchise List
As of March 31, 2026

THA, Dawt Hlei Zing	Publix 783	Atlanta	GA	30316	(404) 373-2858
HRANG, Chan	Publix 1061	Atlanta	GA	30309	(404) 253-3544
SANG, Ni Luai	Publix 691	Atlanta	GA	30345	(770) 724-1947
CEU, Biak Lian	Publix 718	Atlanta	GA	30342	(404) 843-4353
CEU, Biak Lian	Publix 720	Atlanta	GA	30327	(404) 848-1610
CUAI, Thla	Publix 773	Atlanta	GA	30329	(404) 638-6022
LIAN, Kha Pau	Publix 1226	Atlanta	GA	30318	(404) 351-4794
KHAR, Ngun	Publix 647	Atlanta	GA	30328	(678) 443-2100
LAM, Mang	Publix 1044	Atlanta	GA	30324-3725	(404) 638-1900
TUN, Tin Aung	Publix 282	Atlanta	GA	30305	(404) 848-0330
SUNG, Van	Publix 503	Atlanta	GA	30331	(404) 505-2870
LIN, Jasper	Publix 536	Atlanta	GA	30339	(770) 437-7000
HTOO, Hsa Ler	Publix 724	Atlanta	GA	30306	(404) 892-9229
CING, Hau Lam	Publix 1647	Atlanta	GA	30316	(404) 521-3992
NING, Hung	Publix 646	Atlanta	GA	30350	(678) 443-8980
VUNG, Ning Khan	Publix 1825	Atlanta	GA	30315	(800) 242-1227
VUNG, Ning Khan	Publix 1867	ATLANTA	GA	30305-1726	(800) 242-1227
ZAM, Gin Khan	Publix 1119	Atlanta	GA	30318	(404) 609-7935
MANG, Tin Tian	Publix 599	Atlanta	GA	30324	(404) 898-1850
THANG, Tluang Za	Publix 541	Atlanta	GA	30339	(770) 612-5140
CUNG, Dawt	Publix 664	Atlanta	GA	30326	(404) 848-0344
SUNG, Men	Publix 514	Atlanta	GA	30350	(770) 640-5950
AN, Yang H	Publix 1056	Atlanta	GA	30331	(404) 346-9253
AN, Huayu	Publix 719	Atlanta	GA	30305	(404) 869-6556
TUANG, Kap Thawn	Publix 1718	Atlanta-Fulton	GA	30331	(404) 346-4170
KHAI, Nang Mun	Publix 525	Augusta	GA	30909	(706) 731-5200
THANG, Lei Hmun	Fresh Take Grocery	Augusta	GA	30909	(757) 389-3805
MEH, Soe	Publix 2109	Bainbridge	GA	39819	
MANG, Hau Lian	Publix 1251	Bethlehem	GA	30620	(770) 307-1600
TUANG, Cin Pian	Publix 1622	Bonaire	GA	31005	(478) 322-3620
CHEN, Hao En	Publix 1768	Braselton	GA	30517	
LIAN, KAM NGAIH	Publix 1363	Brookhaven	GA	30319-3175	(404) 233-7475
DIM, Neam Khan	Publix 2039	BROOKHAVEN	GA	30319	
WIN, Khin Sandar	Publix 431	Brunswick	GA	31525	(912) 261-4730
KHAI, Khup Khan	Publix 706	Buford	GA	30518	(770) 614-7700
Chen, Chunyan	Publix 1678	Buford	GA	30519	(770) 831-1054
CHUAH, Van San	Publix 596	Buford	GA	30518-5765	(770) 614-8860
TUN, Lin Eithet	Publix 1291	Byron	GA	31008	(478) 971-7706
KHAI, Enn Sun	Publix 624	Canton	GA	30114	(770) 720-1001
KHAI, Enn Sun	Publix 1248	Canton	GA	30114	(770) 479-3700
MAWNG, Te	Publix 042	Canton	GA	30115	(678) 455-0112
MAWNG, Te	Publix 711	Canton	GA	30115	(770) 345-8600
KYAW, Sai M.	Publix 694	Canton	GA	30114	(770) 345-8380
KYAW, Sai M.	Publix 1064	Canton	GA	30114	(770) 345-5389
KHINE, Hnin Nu Nu	Publix 608	Carrollton	GA	30117	(770) 214-3140
KYAW, Sai M.	Publix 554	Cartersville	GA	30121	(770) 606-2360
MAWI, Siang Za	Publix 1777	Chamblee	GA	30341	(770) 457-9835
LIAN, Lian	Publix 1868	COLUMBUS	GA	31820	(706) 358-0289
RUL, Pa	Publix 650	COLUMBUS	GA	31909	(706) 565-3260
Kip, Thawng	Publix 1880	COLUMBUS	GA	31909	(706) 223-6574
SUNG, Biak Li	Publix 474	Columbus	GA	31904	(706) 571-3420
SOE , Ye Myint	Publix 562	Columbus	GA	31907	(706) 568-8820
THURMI, Van Van	Publix 1390	Columbus	GA	31906-1717	(706) 561-2160
TA, Khual	Publix 1118	Conyers	GA	30012-3834	(678) 413-2421
DIM, Neam Khan	Publix 1071	Conyers	GA	30094	(770) 918-2512
DIM, Neam Khan	Publix 1411	Conyers	GA	30013	(770) 785-6202
NO, En	Publix 1811	Covington	GA	30014	(770) 385-5705
DIM, Neam Khan	Publix 744	Covington	GA	30016	(678) 342-0766
LAM, Mang	Publix 1773	CUMMING	GA	30028	(800) 242-1227
CAN, Dar	Publix 049	Cumming	GA	30041-5546	(678) 455-0610
DONG, Jingya	Publix 1690	Cumming	GA	30028	(770) 889-5778
WU, Rina	Publix 1130	Cumming	GA	30040	(678) 455-1232
TIAL, Siang	Publix 519	Cumming	GA	30040	(770) 781-2040
CHEN, Hao En	Publix 026	Cumming	GA	30041-1266	(770) 781-5601
THANG, Cin Sian	Publix 803	Dacula	GA	30019	(770) 822-5959
THANG, Cin Sian	Publix 1178	Dacula	GA	30019	(770) 682-2421
CHOI, Christine	Publix 569	Dacula	GA	30019	(770) 614-1070
TE, Uk	Publix 1893	DACULA	GA	30019	(800) 242-1227
SUNG, Tha Hlei	Publix 2024	Dahlonega	GA	30533	(800) 242-1227
KYINT, Songput Nhan Khat	Publix 1217	Dallas	GA	30157	(678) 840-4676
THANG, Chan Mawi	Publix 1063	Dallas	GA	30157	(770) 505-5838
THANG, Chan Mawi	Publix 1184	Dallas	GA	30132	(770) 975-6786
SUNG, Tha Hlei	Publix 1542	Dawsonville	GA	30534	(706) 216-4220
THA, Dawt Hlei Zing	Publix 269	Decatur	GA	30034	(770) 322-2380
SANG, Ni Luai	Publix 665	Decatur	GA	30033	(404) 638-1293
SANG, Ni Luai	Publix 723	Decatur	GA	30033	(404) 638-6015
CING, Ning Sian	Publix 1724	Decatur	GA	30030	(404) 378-9225
CING, Lian San	Publix 1870	DOUGLAS	GA	31533	(912) 493-6059
TUN, Nang Sian	Publix 485	Douglasville	GA	30135	(770) 920-3460
TUN, Nang Sian	Publix 1139	Douglasville	GA	30135	(770) 577-5133
CHUAH, Van San	Publix 585	Duluth	GA	30096	(770) 622-6750
LEE, Kyubong	Publix 505	Duluth	GA	30096	(770) 806-2780
LEE, Kyubong	Publix 726	Duluth	GA	30096	(770) 813-7465
FRAZIER, Chunbo	Publix 226	Duluth	GA	30097	(770) 813-7450
THE, Ei Ei	Publix 765	Dunwoody	GA	30338	(678) 443-0644
THE, Ei Ei	Publix 1758	Dunwoody	GA	30338	(770) 522-5133
THANG, Phun Hu	Publix 1286	Evans	GA	30809	(706) 650-1460
MUNG, Christopher	Publix 526	Evans	GA	30809	(706) 650-5040
THANG, Pau Sian	Publix 1183	Fairburn	GA	30213	(770) 774-3600

Zenshi Food Service Counters
Franchise List
As of March 31, 2026

MIN, Thandar	Publix 1087	Fayetteville	GA	30214	(678) 817-5415
SUI, Cing Lel	Publix 579	Fayetteville	GA	30214	(770) 460-4100
XIE, Jian Jun	Publix 844	Flowery Branch	GA	30542	(770) 967-1303
CING, Awi Nem	Publix 634	Flowery Branch	GA	30542	(770) 538-4270
PIANG, Kai Sawm	Publix 1279	Flowery Branch	GA	30542	(770) 967-1249
THANG, Pau	Fort Moore	Fort Benning	GA	31905	(706) 544-3524
THU, Maung Myo Kyaw	Fort Eisenhower	Fort Gordon	GA	30905	(706) 791-3568
MUNG, Langh Khat	Fort Stewart	Fort Stewart	GA	31314	(912) 767-9309
CING, Awi Nem	Publix 717	Gainesville	GA	30501	(770) 538-0665
HMUNG, Bawiza	Publix 1110	Gainesville	GA	30501	(770) 534-1350
NEM, Ciin Sian	Publix 2006	GAINESVILLE	GA	30501	(678) 971-6207
MUNG, Francis Mang Thoung	Publix 2045	Gainesville	GA	30506	(470) 892-3127
CUNG, Naomi Cer	Publix 853	Greensboro	GA	30642	(706) 454-7140
TUANG, Thang Lam	Publix 1891	Hampton	GA	30228	(470) 369-9579
MUNG, James Suutkhan	Publix 2016	Hinesville	GA	31313	
MOE, Moe	Publix 1188	Hoschton	GA	30548	(706) 654-5900
KIM, Niang H.	Publix 1892	Hoschton	GA	30548	(706) 471-5334
THANG , Hlawn Ceu	Publix 2047	Jasper	GA	30143	(863) 688-1188
ZHANG, Rixin	Publix 1827	Jefferson	GA	30549	(706) 708-5216
TIAM, Bawi Peng Bual	Publix 515	Johns Creek	GA	30022	(770) 751-4580
TUN, Lin Eithet	Publix 1008	Kathleen	GA	31047	(478) 987-6707
KHUP, Zam Suan	Publix 769	Kennesaw	GA	30152	(770) 426-5299
SHALOM, Pau Tuang	Publix 559	Kennesaw	GA	30152	(770) 426-3240
SHALOM, Pau Tuang	Publix 1077	Kennesaw	GA	30144	(678) 331-8750
BIK, Tha	Publix 146	Kennesaw	GA	30144	(770) 419-4030
UK, Siang Lian	Publix 764	Kennesaw	GA	30144	(770) 516-3883
MYINT, Zaw	King's Bay NSB	King's Bay	GA	31547	(912) 573-3310
LIANUKTHANG, Dolly Rosemary	Publix 1865	Kingsland	GA	31548	
Kham, Pau Sian	Publix 540	Lagrange	GA	30241	(706) 883-1120
Kham, Pau Sian	Publix 1873	LAGRANGE	GA	30240	(800) 242-1227
THANG, Cin Sian	Publix 495	Lawrenceville	GA	30043	(770) 339-5600
CHUAH, Van San	Publix 863	Lawrenceville	GA	30043	(678) 376-3220
THANG, Eunice Tuanmawi	Publix 612	Lawrenceville	GA	30044	(770) 277-5240
FRAME, Dan	Publix 538	Lawrenceville	GA	30043-7638	(770) 338-4560
TLAN, Henry	Publix 1078	Lawrenceville	GA	30045	(770) 682-2430
CHU, Yueh Jiuan	Publix 859	Lawrenceville	GA	30044	(678) 376-3844
SANG, Mung Sian	Publix 1349	Leesburg	GA	31763	(229) 431-0294
LI, Men	Publix 074	Lilburn	GA	30047	(770) 806-4040
KO, Chris L.	Publix 564	Lilburn	GA	30047	(770) 381-4170
TUANG, Kap Thawn	Publix 730	Lithia Springs	GA	30122	(770) 920-3471
KHUP, Nang Kim	Publix 752	Lithonia	GA	30038-2317	(770) 322-1890
CUNG, Run	Publix 1052	Locust Grove	GA	30248	(770) 288-4180
KHAT, Pau	Publix 2102	Locust Grove-Henry	GA	30248-4111	
THANG, Cin Sian	Publix 789	Loganville	GA	30052	(770) 822-0637
SANG, Lang Le	Publix 603	Loganville	GA	30052	(770) 466-5150
LIAN, Kha Pau	Publix 1112	Mableton	GA	30126	(678) 398-3651
LAN, Elizabeth Suihlawnthar	Publix 1700	Macon	GA	31220	(478) 474-4918
TUN, Lin Eithet	Publix 1263	Macon	GA	31210	(478) 474-3064
KHUP, Zam Suan	Publix 122	Marietta	GA	30064	(770) 423-4160
YU, An	Publix 561	Marietta	GA	30064	(770) 426-3250
CUNG, Joseph	Publix 033	Marietta	GA	30066	(770) 578-6000
BIK, Chung Lian	Publix 725	Marietta	GA	30067	(770) 612-5150
BIK, Chung Lian	Publix 1745	Marietta	GA	30062	(770) 576-1620
SANG, Biak Awi	Publix 672	Marietta	GA	30066	(770) 509-3991
UK, Siang Lian	Publix 548	Marietta	GA	30066	(770) 419-4043
KHUAL, Mung Khan	Publix 280	Marietta	GA	30062	(770) 509-3980
MANG, Thang	Publix 534	Martinez	GA	30907	(706) 650-3360
MANG, Sua	Publix 1786	McDonough	GA	30252	(770) 288-8588
CUNG, Run	Publix 1054	McDonough	GA	30253	(770) 898-6650
ZAM, Gin Khan	Publix 816	McDonough	GA	30252	(770) 898-1213
SEN, Khup	Publix 1725	McDonough	GA	30252	(770) 305-9357
BAWI, Nau Lian	Publix 2003	MILLEDGEVILLE	GA	31061	(478) 223-5016
KIM, Niang H.	Publix 1736	Monroe	GA	30656	(678) 635-4316
MUNG, Sut Suan	Moody AFB	Moody AFB	GA	31699	(229) 257-3384
PAR, Thla Iang	Publix 461	Morrow	GA	30260	(770) 472-4000
KHUP, Mun	Publix 1540	Moultrie	GA	31788	(229) 217-4812
ZAW, Naung Latt	Publix 470	Newnan	GA	30263	(770) 502-0693
ZAW, Naung Latt	Publix 1143	Newnan	GA	30265	(770) 502-2370
THANG , Hang Khan	Publix 1816	Newnan	GA	30265	(678) 633-6167
NYEIN CHAN, Nyi Nyi	Publix 786	Newnan	GA	30265	(770) 502-0686
CUNG, Naomi Cer	Publix 560	Norcross	GA	30092	(770) 417-5100
CUNG, Naomi Cer	Publix 722	Norcross	GA	30092	(770) 417-5155
NO, Moses Mung	Publix 546	Peachtree City	GA	30269	(770) 486-2020
MIN, Thandar	Publix 799	Peachtree City	GA	30269	(770) 486-0133
TUANG, Cin Pian	Publix 1233	Perry	GA	31069	(478) 218-7577
KHAI, Neng Za	Publix 1364	Pooler	GA	31322	(912) 330-7313
MANG, Pau Sian	Publix 1584	Pooler	GA	31322	(912) 450-1070
MANG, Pau Sian	Publix 1256	Port Wentworth	GA	31407	(912) 966-5895
THANG, Khup Go	Publix 670	Powder Springs	GA	30127	(770) 222-2972
KHAI, KAM	Publix 496	Powder Springs	GA	30127	(770) 419-6000
KIM, Suan Khan	Publix 1154	Richmond Hill	GA	31324	(912) 459-1171
MANG, Hau Sawm	Publix 1641	Ringgold	GA	30736	(706) 858-6568
TUANG, Cin Pian	Robins AFB	Robins AFB	GA	31098	(478) 222-7618
TANEDO, Christian Louie Padilla	Publix 1403	Rome	GA	30165	(706) 291-3380
CUAI, Thla	Publix 626	Roswell	GA	30075	(770) 552-4580
CUAI, Thla	Publix 825	Roswell	GA	30075	(770) 645-0144
NWE, Yin Su	Publix 086	Roswell	GA	30075	(770) 640-6200
ZI, Aung	Publix 1043	Roswell	GA	30076	(770) 640-6035
YANG, Xuhui	Publix 468	Sandy Springs	GA	30328	(404) 843-4340

Zenshi Food Service Counters
Franchise List
As of March 31, 2026

THANG, Pau Ngaih	Publix 522	Savannah	GA	31405	(912) 353-1260
THANG, Pau Ngaih	Publix 1489	Savannah	GA	31411	(912) 598-3130
LIA, Naw	Publix 456	Savannah	GA	31410	(912) 897-8100
LIA, Naw	Publix 521	Savannah	GA	31410	(912) 897-8111
ZAM THANG, Suan	Hunter AAF	Savannah	GA	31409	(912) 315-5219
ZAM THANG, Suan	Publix 1186	Savannah	GA	31419	(912) 925-4112
NO, Moses Mung	Publix 1761	Senoia	GA	30276	(770) 599-3311
NO, Moses Mung	Publix 1890	SHARPSBURG	GA	30277-3505	(770) 956-8383
MUAN, Mang Sian	Publix 1250	Smyrna	GA	30080	(770) 319-1123
VANG, Theresa Ni Par Zi	Publix 753	Smyrna	GA	30080	(770) 434-6225
THANG, Anthony Hang Tung	Publix 539	Snellvile	GA	30039	(770) 736-7800
SANG, Lang Le	Publix 508	Snellville	GA	30078	(770) 978-5800
HNEM, Van Bawi	Harris Teeter 168	St. Simons	GA	31522	(912) 638-8100
THAWNG, Van Sui	Publix 1733	STATESBORO	GA	30458-5697	(912) 243-6225
KIM, Thang Tuat	Publix 092	Stockbridge	GA	30281	(770) 389-4666
KIM, Thang Tuat	Publix 547	Stockbridge	GA	30281	(770) 389-6130
CHU, Yueh Jiuan	Publix 494	Stone Mountain	GA	30087	(770) 879-2700
KIM, Gracy H	Publix 615	Suwanee	GA	30024	(770) 932-4300
ZAM, Cin Khan	Publix 565	Suwanee	GA	30024	(770) 886-5335
ZAM, Cin Khan	Publix 1091	Suwanee	GA	30024	(770) 622-0218
TIAL, Siang	Publix 1227	Suwanee	GA	30024	(770) 781-0368
MUNG, Khen Lian	Publix 1498	Thomasville	GA	31792	(229) 226-9800
THANG, Thang Seng	Publix 1422	Tifton	GA	31794	(229) 386-1166
TLING, Dawt Tin	Publix 1772	Tucker	GA	30084	(770) 934-4799
THANG , Hlawn Ceu	Publix 892	Tyrone	GA	30290	(770) 774-2780
SAN, David Kim	Publix 430	Valdosta	GA	31601	(229) 242-2409
KHAI, Michael	Publix 1435	Valdosta	GA	31602	(229) 671-9835
MUNG, Thang Gin	Publix 2011	VILLA RICA	GA	30180	(404) 907-1711
LEE, Haydee Grimanesa	Publix 617	Watkinsville	GA	30677	(706) 769-2080
TAWNG, Mung	Publix 1685	Winder	GA	30680	(863) 688-1188
KHAI, Enn Sun	Publix 463	Woodstock	GA	30189	(770) 516-2040
THAWNG, Biak Tha	Publix 636	Woodstock	GA	30188	(770) 517-1600
KYAW, Sai M.	Publix 880	Woodstock	GA	30188	(770) 928-5530
SAKAI, Akira	Safeway 214	Aiea	HI	96701	(808) 483-5900
Kahng, Sung W	Safeway 2897	Ewa Beach	HI	96706	(808) 683-3200
KIM, Scott	Safeway 2897 W	Ewa Beach	HI	96706	(808) 683-3200
MARIP, La	Hickam AFB	Hickam AFB	HI	96853	(808) 449-1363
ZATHANG, Van Mawng	Safeway 2893	Hilo	HI	96720	(808) 920-8870
CHOI, Wonchul	Safeway 203	Honolulu	HI	96813	(808) 566-6811
GAHNG, Ellen	Safeway 2944	Honolulu	HI	96814	(808) 535-1780
SAKAI, Akira	Safeway 211	Honolulu	HI	96818	(808) 831-6100
LI, Ben	Safeway 204	Honolulu	HI	96822	(808) 988-2058
SHIN, Injoo	Safeway 2747	Honolulu	HI	96816	(808) 733-2600
LAM, Bethany Bi	Safeway 215	HONOLULU	HI	96825	(808) 396-6337
MARIP, Nu Khawn	Pearl Harbor	JBPHH	HI	96860-6000	(808) 471-8402
SHAN, Batmend Choidorj	Safeway 280	Kahului	HI	96732	(808) 359-2970
THWE, Myo Lin	Safeway 205	Kailua	HI	96734	(808) 266-5200
ARPIA, Carol M.	Safeway 1087	Kailua	HI	96734	(808) 233-5222
ARPIA, Carol M.	Safeway 2208	Kailua	HI	96734	(808) 254-2597
AUNG, Zaw Min	Safeway 1117	Kailua-Kona	HI	96740	(808) 329-2207
ARPIA, Carol M.	Safeway 207	Kaneohe	HI	96744	(808) 233-5800
LEE, Stella Kyoung	Kaneohe Bay MCBH	Kaneohe Marine Corps	HI	96863	(808) 257-1463
LWIN, Khin Maung	Safeway 1209	Kapaa	HI	96746	(808) 822-2464
SAKAI, Akira	Safeway 1263	Kapolei	HI	96707	(808) 674-0070
GUNHTANG, Hkunsoi	Safeway 1500	Kihei	HI	96753	(808) 891-9120
SHAN, Zaw	Safeway 1222	Lahaina	HI	96761	(808) 667-4392
DASHI, Nwawn Jaing	Safeway 2894	Lihue	HI	96766	(808) 246-0290
SAKAI, Akira	Safeway 2218	Mililani	HI	96789	(808) 623-8111
MAI, Lawalt Zaw	Schofield Barracks	WAHIAWA	HI	96786	(808) 655-5066
MARAN, Isaac Deeawng	Safeway 3092	Wailuku	HI	96793	(808) 243-3522
LIAN, Thawng Tha	Safeway 275	Waipahu	HI	96797	(808) 664-7725
SANGA, Lalnghak	Gateway Market 1	Des Moines	IA	50312	(515) 243-1754
SUAN, Nang Cin	Albertson's 3174	Ammon	ID	83406	(208) 524-8100
TANGBAU, Hawng Dwi	Albertsons 177	Boise	ID	83713	(208) 939-5145
WIN, Kaung Zaw	Albertsons 156	Boise	ID	83714	(208) 342-2756
WIN, Kaung Zaw	Albertson's 189	Boise	ID	83703	(208) 426-9614
KYAW, Pyae Phyo	Albertson's 154	Boise	ID	83704	(208) 375-2542
PHAUNG, Nant Ei Sue	Safeway 101	Boise	ID	83702	(208) 342-5651
SWE, Sanda	Safeway 243	Coeur d'Alene	ID	83814	(208) 664-9101
TANGBAU, Hawng Dwi	Safeway 182	Eagle	ID	83616	(208) 939-9850
LIAN, Kham	Safeway 126	Emmett	ID	83617	(208) 365-4420
SUAN, Nang Cin	Albertson's 138	Idaho Falls	ID	83404	(208) 523-0950
LIAN, Do Cin	Albertson's 145	Idaho Falls	ID	83402	(208) 522-3392
AWNG, J Sut	Safeway 238	Lewiston	ID	83501	(208) 743-1561
THANG, Khup Za Muan	Ridley's Family Market 8463	McCall	ID	83638	(208) 634-8719
HANG, Nang Pum	Safeway 383	Moscow	ID	83843	(208) 883-0713
HLAING, Razar	Mt. Home AFB	Mt. Home AFB	ID	83648	(208) 828-2163
PI, Dhang	Albertson's 159	Pocatello	ID	83201	(208) 233-0455
THANG, Cung Chin	Safeway 350	Sandpoint	ID	83864	(208) 263-9638
THAWNG, Cung Bawi	Jewel Osco 1256	Algonquin	IL	60102	(847) 854-0242
THAWNG, Cung Bawi	Jewel Osco 2310	Algonquin	IL	60102	(847) 658-5635
THUE, Saw Poe	Jewel Osco 3466	Antioch	IL	60002	(847) 395-7363
LWIN, Milton Thar Phyo	Jewel Osco 3461	Arlington Heights	IL	60005	(847) 593-1730
NGUYEN, Thuy Phuong	Jewel Osco 3478	Arlington Heights	IL	60004	(847) 255-8740
YOON, James Sangchul	Jewel Osco 3422	Arlington Heights	IL	60005	(847) 398-1430
LIAN, Zaeng	Jewel Osco 3240	Aurora	IL	60502	(630) 851-4657
LIAN, Zaeng	Jewel Osco 4252	Aurora	IL	60506	(630) 859-1212
CUNG, Hre	Jewel-Osco 3451	Barrington	IL	60010	(847) 381-4525
KHAI, Paoen	Jewel Osco 3348	Bartlett	IL	60103	(630) 540-0856

Zenshi Food Service Counters
Franchise List
As of March 31, 2026

PIANG, Thang Kim	Jewel-Osco 3219	Batavia	IL	60510	(630) 879-6622
HO, Joanna	Jewel Osco 3495	Bensenville	IL	60106	(630) 238-0170
WIN, Khin Thuzar	Jewel Osco 116	Bloomington	IL	61701	(309) 663-4012
CANGMAH, Ram Cung Lian	Jewel Osco 4013	Bolingbrook	IL	60440	(630) 226-1892
BIAK, Van	Jewel Osco 2488	Bourbonnaise	IL	60914	(815) 929-0560
JEONG, Hyojung Cho	Jewel-Osco 3479	Buffalo Grove	IL	60089	(847) 459-3070
KHAI, Paoen	Jewel Osco 2346	Carol Stream	IL	60188	(630) 289-3700
MANG, Chung Kho	Jewel Osco 3496	Cary	IL	60013	(847) 639-3599
CHEN, Huan Hua	Jewel Osco 3224	Chicago	IL	60634	(773) 725-8900
TUANG, Vung Khen	Jewel-Osco 3514	Chicago	IL	60657	(773) 871-1054
SUN THANG, Ram Tiam Hngak	Jewel Osco 3234	Chicago	IL	60610	(312) 397-1130
LIAN, Uk Peng	Jewel-Osco 3441	Chicago	IL	60657	(773) 871-8242
TUANG, Ciau Lam	Jewel-Osco 3442	Chicago	IL	60630	(773) 583-8080
SOE, Myo Min	Jewel Osco 0092	Chicago	IL	60617	(773) 731-9086
CING, Niang Go	Jewel Osco 0901	Chicago	IL	60618	(773) 327-1204
CING, Niang Go	Jewel Osco 3454	Chicago	IL	60618	(773) 472-6171
MUNG, Langh Suan	Jewel Osco 3349	Chicago	IL	60639	(773) 637-1631
TUANG, Kim Khan	Jewel Osco 1241	Chicago	IL	60622	(773) 342-3410
SAI NAW KHAM, Jonathan	Jewel Osco 3721	CHICAGO	IL	60638	(773) 735-0043
ROON THAWNG, James	Jewel Osco 1296	Chicago	IL	60656	(773) 775-6866
KO, Aung Ko	Jewel-Osco 3344	Chicago	IL	60608	(312) 733-0153
KO, Aung Ko	Jewel-Osco 3376	Chicago	IL	60661	(312) 775-0991
CHONG, Lhing Nei	Jewel-Osco 3632	Chicago	IL	60613	(773) 327-2330
AUNG, Han Htoo	Jewel Osco 3538	Chicago	IL	60626	(773) 274-1287
KYAW, Ohnmar	Jewel-Osco 3368	Chicago	IL	60610	(312) 527-2162
THANG, Haw Pum	Jewel Osco 1282	Chicago	IL	60630	(773) 777-1142
THANG, Haw Pum	Jewel-Osco 3443	Chicago	IL	60640	(723) 784-1922
MUANG, Zo Kim	Jewel-Osco 3407	Chicago	IL	60640	(773) 728-7730
NWE, Zin Mar	Jewel Osco 0187	Chicago	IL	60643	(773) 568-8157
NWE, Zin Mar	Jewel Osco 3082	Chicago	IL	60637	(773) 358-4278
CIN, Luan Lam	Jewel Osco 3470	Chicago	IL	60618	(773) 583-9150
LEE, Sung-Kyung	Jewel-Osco 3262	Chicago	IL	60641	(773) 202-0211
PAK, Du Yon	Jewel-Osco 3345	Chicago	IL	60605	(312) 663-0580
SUNG, Ca Hlei	Jewel-Osco 3455	Chicago	IL	60613	(773) 477-7151
WU, Yan Yao	Jewel Osco 4500	Chicago	IL	60607	(312) 850-3915
RUAN, Yun F.	Jewel Osco 3546	Chicago	IL	60610	(312) 642-2709
KYANT, Sai Long	Jewel Osco 3003	Clarendon Hills	IL	60514	(630) 654-3455
THAWNG, Cung Bawi	Jewel Osco 2517	Crystal Lake	IL	60014	(815) 356-8628
KARING, Bawn Htoi	Jewel Osco 0123	Darien	IL	60561	(630) 960-3177
THANG, Lian Min	Jewel-Osco 3475	Deerfield	IL	60015	(847) 498-2958
MAUNG, Zaw Theh	Jewel Osco 3272	DeKalb	IL	60115	(815) 758-5478
BIK, CUNG	Jewel Osco 3473	Des Plaines	IL	60016	(847) 956-1220
BIAK, Van	Jewel Osco 3745	Diamond	IL	60416	(877) 723-3929
BAWKKHENG, Bual Tial	Jewel Osco 4047	Downers Grove	IL	60516	(630) 969-3105
Ceu, Duh	Jewel Osco 3097	Downers Grove	IL	60515	(630) 963-0645
CEU, Phun	Jewel Osco 3770	East Moline	IL	61244	(309) 751-0960
KHENG, Duh	Jewel Osco 2313	Elgin	IL	60123	(847) 695-7573
KHENG, Duh	Jewel Osco 3291	Elgin	IL	60120	(847) 622-8112
YOON, James Sangchul	Jewel Osco 3220	Elk Grove Village	IL	60007	(847) 593-1112
LIAN, Van	Jewel Osco 2444	Elmhurst	IL	60126	(630) 834-0006
LIAN, Van	Jewel Osco 3346	Elmhurst	IL	60126	(630) 530-8790
Khual, Cin Za	Caputo's Market 3	Elmwood Park	IL	60707	(708) 453-0155
AUNG, Han Htoo	Jewel Osco 3428	Evanston	IL	60202	(847) 869-7950
THU, Brian	Jewel-Osco 3487 KOSHER	Evanston	IL	60202	(847) 328-9791
AUNG, Min Soe	Jewel Osco 3453	Fox Lake	IL	60020	(847) 973-9075
WIN, Nay Tun	Jewel Osco 2507	Fox River Grove	IL	60021	(815) 382-0981
SAN, Moe	Jewel Osco 0052	Frankfort	IL	60423	(815) 464-5352
AYE, Mah	Jewel Osco 3340	Glen Ellyn	IL	60137	(630) 858-9096
THANG, Ram Zung	Jewel Osco 0264	Glendale Hts.	IL	60139	(630) 893-2770
THANG, Van Lian	Jewel Osco 2219	Glenview	IL	60026	(847) 564-8550
THANG, Van Lian	Jewel-Osco 3426	Glenview	IL	60025	(847) 486-0864
LATT, Maung M	Jewel Osco 0001	Glenview	IL	60026	(847) 657-3124
LAY, Mawng	Jewel Osco 3464	Grayslake	IL	60030	(847) 543-8976
DAL , Man Khan	Great Lakes NS	Great Lakes	IL	60088	(847) 688-2644
CHERPUT, Cdin Thanga	Jewel-Osco 3405	Gurnee	IL	60031	(847) 855-1991
OO, Tun Tun	Jewel Osco 4029	Hickory Hills	IL	60457	(708) 599-5514
THANG, Lian Min	Jewel-Osco 3459	Highland Park	IL	60035	(847) 579-0872
THANG, Lian Min	Jewel-Osco 3459 KOSHER	Highland Park	IL	60035	(847) 579-0872
TUANG, Pum Siam	Jewel Osco 3316	Hoffman Estates	IL	60195	(847) 882-3210
ZI, Ngun	Jewel-Osco 3486	Hoffman Estates	IL	60192	(847) 202-0586
MAUNG, Aung Myo	Jewel Osco 1303	Homer Glen	IL	60491	(708) 301-0984
ZIN, Aung Khine	Jewel Osco 3188	Homewood	IL	60430	(708) 957-1810
WIN, Thi Thi	Jewel Osco 3394	Huntley	IL	60142	(847) 961-5597
MAUNG, Zaw Theh	Jewel Osco 3198	Huntley	IL	60142	(847) 802-3357
THANG, Pau Sian S	Jewel-Osco 3490	Lake Forest	IL	60045	(847) 735-8018
CHIN, Sui Tha	Jewel-Osco 3485	Lake Zurich	IL	60047	(847) 438-7300
CHIN, Sui Tha	Jewel Osco 4305	Lake Zurich	IL	60047	(847) 989-2962
ENG, Sung	Jewel Osco 3182	Lemont	IL	60439	(630) 243-1925
THANG, Pau Sian S	Jewel Osco 0606	Libertyville	IL	60048	(847) 816-8200
THANG, Kathy	Jewel Osco 0056	Lisle	IL	60532	(630) 964-5166
NUN, Nang Lian	Jewel Osco 3720	Lockport	IL	60441	(815) 834-9516
NU, Sian	Jewel Osco 3278	Lombard	IL	60148	(630) 953-1390
LIAN , Van Bawi	Jewel Osco 1518	McHenry	IL	60050	(815) 385-7030
SOE, Myo Min	Jewel Osco 2504	Merrionette Park	IL	60803	(708) 389-9001
TUN, Mehm Nyan	Jewel Osco 3730	Minooka	IL	60447	(815) 467-0924
CEU, Phun	Jewel Osco 0122	Moline	IL	61265	(309) 797-0558
MARIP, Ah Lawt	Jewel Osco 3741	Morris	IL	60450	(815) 942-2374
BIK, CUNG	Jewel Osco 3476	Mount Prospect	IL	60056	(847) 394-9390
THANG, Zung Tin	Jewel Osco 3061	Mundelein	IL	60060	(847) 970-9250

Zenshi Food Service Counters
Franchise List
As of March 31, 2026

Kee, Nant S.	Jewel-Osco 3488	Mundelein	IL	60060	(847) 566-6161
AUNGNAING, Naikyal	Jewel Osco 0058	Naperville	IL	60564	(630) 904-5119
KARING, Bawn Htoi	Jewel Osco 1111	Naperville	IL	60540	(630) 961-9050
KYANT, Sai Long	Jewel Osco 0185	Naperville	IL	60563	(630) 357-1040
LIAN, Sian Khaw	Angelo Caputo's Fresh Market	Naperville	IL	60564	(630) 579-3300
ZAATHANG, Ngun Thamawi	Jewel Osco 0059	Naperville	IL	60540	(630) 355-2172
WAI, Myo Tun	Jewel Osco 3178	New Lenox	IL	60451	(815) 462-0018
CHONG, Moses	Jewel Osco 3446	Niles	IL	60714	(847) 965-3925
CHONG, Moses	Jewel Osco 3484	Niles	IL	60714	(847) 647-6880
MUNG, Lian Kap	Jewel Osco 3429	Niles,	IL	60714	(847) 298-6352
KHAM, Vung Zuan	Jewel Osco 2363	Oak Forest	IL	60452	(708) 614-6700
SOE, Myo Min	Jewel Osco 0086	Oak Lawn	IL	60453	(708) 599-4500
SOE, Myo Min	Jewel Osco 0157	Oak Lawn	IL	60453	(708) 636-2520
RUAN, Yun F.	Jewel Osco 0607	Oak Lawn	IL	60453	(708) 857-8274
SAN, Moe	Jewel Osco 3192	Orland Park	IL	60467	(708) 479-1573
NAING, Soe	Jewel Osco 4138	Oswego	IL	60543	(630) 892-0029
THANG, Langh Tuan	Jewel Osco 0081	Oswego	IL	60543	(630) 551-1347
SANG, Suan Thawn	Jewel Osco 3474	Palatine	IL	60074	(847) 991-4545
JEONG, Hyojung Cho	Jewel Osco 3445	Palatine	IL	60067	(847) 991-1888
PHYO, Thazin	Jewel-Osco 3053	Palos Heights	IL	60463	(708) 671-1568
PHYO, Thazin	Jewel Osco 2160	Palos Park	IL	60462	(708) 361-8880
MUNG, Lian Kap	Jewel Osco 3481	Park Ridge	IL	60068	(847) 696-0824
MEI, Jingjian	Jewel Osco 1190	Plainfield	IL	60585	(815) 577-2605
SANG, Biak Hmun	Jewel Osco 0080	Plainfield	IL	60586	(815) 254-3391
LEE, Mark	Jewel-Osco 3223	River Forest	IL	60305	(708) 771-0044
LWIN, Milton Thar Phyo	Jewel Osco 3491	Rolling Meadows	IL	60008	(847) 398-2060
CANGMAH, Ring Thang	Jewel Osco 3191	Romeoville	IL	60446	(815) 293-0665
LARSUE, Nantrillion	Jewel Osco 3432	Round Lake	IL	60073	(847) 223-9201
LYNN, Victoria	Jewel Osco 3167	S. Chicago Heights	IL	60411	(708) 755-7372
TUANG, Pum Siam	Jewel Osco 3216	Schaumburg	IL	60194	(847) 524-8960
ENG, Za	Jewel Osco 4308	Schaumburg	IL	60193	(847) 891-8388
PATRATA, Marissa Aluran	Scott AFB	Scott AFB	IL	62225	(618) 212-3898
NAING, Soe	Jewel Osco 3084	Shorewood	IL	60404	(815) 730-3944
SHUI, Lee	Jewel-Osco 3465	Skokie	IL	60077	(847) 677-3331
MUNG, Thang Do	Jewel Osco 3343	South Elgin	IL	60177	(847) 608-1460
KHUAL, Thang	Caputo's Market 2	South Elgin	IL	60177	(847) 289-0600
LIAN , Van Bawi	Jewel Osco 3415	Spring Grove	IL	60081	(815) 675-6716
NON, Chan Na	Jewel Osco 0260	St. Charles	IL	60174	(630) 587-0847
NON, Chan Na	Jewel Osco 3331	St. Charles	IL	60174	(630) 584-7228
HNINN, Nwe Nwe	Jewel Osco 1403	Stickney	IL	60402	(708) 484-8421
CUNG, Hre	Jewel Osco 4268	Streamwood	IL	60107	(630) 837-6015
THANG, Langh Tuan	Jewel Osco 3374	Sugar Grove	IL	60554	(630) 466-1493
MAUNG, Zaw Theh	Jewel Osco 3381	Sycamore	IL	60178	(815) 895-5276
KHAM, Vung Zuan	Jewel Osco 3165	Tinley Park	IL	60477	(708) 532-7414
AYE, Mah	Jewel Osco 3284	Villa Park	IL	60181	(630) 279-8900
MANG, Chung Kho	Jewel Osco 3515	Wauconda	IL	60084	(847) 526-0964
CHERPUT, Cdin Thanga	Jewel-Osco 1424	Waukegan	IL	60087	(847) 249-1130
CHERPUT, Cdin Thanga	Jewel Osco 4516	WAUKEGAN	IL	60085	(847) 662-0042
HLAING, Su Myat	Jewel Osco 1306	West Dundee	IL	60118	(847) 428-3355
Ceu, Duh	Jewel Osco 0068	Westmont	IL	60559	(630) 323-9885
NAWL, UK	Jewel Osco 0283	Wheaton	IL	60187	(630) 682-0220
NAWL, UK	Jewel-Osco 3230	Wheaton	IL	60189	(630) 668-1172
VUNG, Tial	Jewel-Osco 3456	Wilmette	IL	60091	(847) 256-7420
VUNG, Tial	Jewel-Osco 3471	Wilmette	IL	60091	(847) 256-7790
NAW, Ja	Jewel Osco 3341	Wood Dale	IL	60191	(630) 773-4326
BAWKKHENG, Bual Tial	Jewel Osco 0362	Woodridge	IL	60517	(630) 985-9380
MAW, Khant Thura	Jewel Osco 3503	Woodstock	IL	60098	(815) 206-0499
MUNG, Ambrose	Jewel Osco 2702	Yorkville	IL	60560	(630) 553-1617
THA, Aya Ni	Strack & Vantil 8756	Cedar Lake	IN	46303	(219) 374-6300
LIAM KHAM, Khin Maung	Strack & Vantil 8748	Chesterton	IN	46304-9382	(219) 929-1717
BIK, Benjamin Tha Hlei	Strack & Vantil 8797	Crown Point	IN	46307	(219) 661-4144
AUNG, Myint	Strack & Vantil 8752	Crown Point	IN	46307	(219) 661-1400
LANGLE, Win Maung	Jewel Osco 0127	Dyer	IN	46311	(219) 864-0078
TIN, Joseph Cungzauk	Martin's 17	Elkhart	IN	46514	(574) 264-0113
LIAN, Cung Nawl	Martin's 14	Elkhart	IN	46516	(574) 293-6659
HLAWNCEU, Tin Mang	Martin's 6	Elkhart	IN	46517	(574) 875-6211
HLAWNCEU, Tin Mang	Martin's 15	Elkhart	IN	46514	(574) 970-8469
LIAN, Cung Nawl	Martin's 24	Goshen	IN	46528	(574) 537-0719
HMUNG, Duh That	Martin's Express 27	Goshen	IN	46526	(574) 975-0962
ZAW, Win	Martin's 16	Granger	IN	46530	(219) 277-5521
BIK, Lawn	Martin's 25	Granger	IN	46530	(574) 807-8220
MAWI, Van Nuam	Strack & Vantil 8891	Hammond	IN	46323	(219) 844-5415
HMUNG, Benjamin Ngun	Strack & Vantil 8765	Highland	IN	46322	(219) 924-6932
MOO, Saw Kyaw	Strack & Vantil 8778	Hobart	IN	46324	(219) 962-1115
MANG, Steven H.	Kroger 822T	La Fayette	IN	47909	765.474.0677
HTOI, Alexander Zaw	Strack & Vantil 8755	Lowell	IN	46356	(219) 696-6633
ZAW, Win	Martin's 4	Mishawaka	IN	46544	(574) 259-6348
TIN, Joseph Cungzauk	Martin's 12	Mishawaka	IN	46544	(574) 259-2405
SUE, Charity Phaw Thein	Strack & Vantil 8789	Munster	IN	46321	(219) 836-8414
LANGLE, Win Maung	Jewel Osco 3096	Munster	IN	46321	(219) 836-1118
HMUNG, Duh That	Martin's 20	Nappanee	IN	46550	(574) 773-3013
KHUM, Za Lian	Martin's 22	Plymouth	IN	46563	(269) 936-4081
OO, Kyaw Zin	Strack & Vantil 8782	Portage	IN	46368	(219) 762-9518
LAI, Tei Thau	Strack & Vantil 8768	Schererville	IN	46375	(219) 865-8990
ZAW, Win	Martin's 10	South Bend	IN	46637	(574) 272-6922
KO, Kun Mahar	Martin's 8	South Bend	IN	46619	(574) 288-4854
KO, Kun Mahar	Martin's 11	South Bend	IN	46614	(574) 291-9881
LIAN, Ngun Hmung	Strack & Vantil 8795	St. John	IN	46373	(219) 365-7717
BERLYTHA, Peter K	Strack & Vantil 8750	Valparaiso	IN	46383	(219) 464-3571

Zenshi Food Service Counters
Franchise List
As of March 31, 2026

MYI SHI, Mung San	Strack & Vantil 8749	Valparaiso	IN	46385	(219) 462-5147
TUANG, Kam Sian	Martin's 26	Warsaw	IN	46582	(574) 371-9000
LET, Suang Khua	Fort Leavenworth	Fort Leavenworth	KS	66027	(913) 684-4903
MAUNG, Than Tin	Fort Riley	Fort Riley	KS	66442	(785) 239-0521
HTOO, Saw Shadey	McConnell AFB	Wichita	KS	67221	(316) 759-5621
HNIANG, Rang K	Fort Campbell	Fort Campbell	KY	42223	(270) 640-4008
SHU, Sa San	Fort Knox	Fort Knox	KY	40121	(502) 624-8525
MIN, Paing Soe	Publix 2051	Lexington	KY	40511	(859) 286-8293
KHUP, Pau	Publix 1887	Lexington	KY	40513	(863) 688-1188
NUNPUIA, Lal	Publix 1847	Louisville	KY	40241	(863) 688-1188
THANG, Thawng	Publix 1846	LOUISVILLE	KY	40245-5374	(502) 885-7662
TOMBING, Pau Siankhai	Publix 2050	LOUISVILLE	KY	40245	
OO, Tin Su Khine	Publix 2052	Walton	KY	41094	(859) 379-1138
MANG, Sem Sui	Barksdale Air Force	Barksdale	LA	71110	(318) 456-8263
JANG MAW, Dai Zin	Oak Point Fresh Market	Baton Rouge	LA	70810	(225) 767-6659
LIAN, Cung Bik	Breaux Market 002	Belle Chasse	LA	70037	(504) 393-1012
KAP, San Za	New Orleans NAS JRB	Belle Chasse	LA	70037	(504) 678-2587
LAL, Khai Suan	Fort Polk	Fort Polk	LA	71459	(337) 531-2747
LAZUM, Htoi Seng Ra	Robert's Fresh Market 128	Metairie	LA	70006	(504) 885-7005
MASHAW, Mung Dan	Robert's Fresh Market 134	New Orleans	LA	70117	(504) 262-8888
LAZUM, Htoi Seng Ra	Robert's Fresh Market 131	New Orleans	LA	70124	(504) 282-3428
RALTE, Lal Rem Ruata	Lake View Grocery Store	New Orleans	LA	70124	(504) 293-1201
RALTE, Lal Rem Ruata	Robert's Fresh Market 124	New Orleans	LA	70118	(504) 488-0536
SUNG, Amy	Piggly Wiggly 6458	Scott	LA	70583	(337) 232-9877
THANG, William Ram Kip	Audubon Market	St. Francisville	LA	70775	(225) 635-9817
CHO, Mon Mon	Donelan's 12	Acton	MA	01720	(978) 635-9893
LIN, YOU ZHI	Shaw's 3588	Allston	MA	02215	(617) 783-5878
LWIN, Min	Big Y 46	Amherst	MA	01002	(413) 253-0416
RAI, Purna Kala	Star Market 4568	Auburndale	MA	02466	(617) 965-1793
GURUNG, Asha	Shaw's 2583	Belmont	MA	02478	(617) 489-6540
OO, Thu Zar	Shaw's 4496	Beverly	MA	01915	(978) 232-9104
SHERPA, Angtenjen	Shaw's 602	Boston	MA	02116	(617) 262-4688
SUNNY, Seng	Shaw's 2576	Boston	MA	02215	(617) 267-4684
SHERPA, Doma	Star Market 3696	Boston	MA	02114	(857) 409-3403
RAI, Ajay	Shaw's 4572	Brighton	MA	02135	(617) 787-5266
TAMANG, Dil Bahadur	Star Market 0163	Cambridge	MA	02140	(617) 492-5566
RAI, Purna Kala	Star Market 2565	Cambridge	MA	02138	(617) 876-1450
LIN, Kyaw Htin	Shaw's 428	Canton	MA	02021	(781) 828-1446
SHERPA, Sangye	Shaw's 645	Chestnut Hill	MA	02467	(617) 232-3854
JUNGNEY, Yeshi	Big Y 52	Chicopee	MA	01020	(413) 593-0204
XU, Han Qing	Shaw's 2445	Cohasset	MA	02025	(781) 383-2315
MAY, Mya Mya	Shaw's 619	Dartmouth	MA	02747	(508) 993-9995
SHERPA, Angtenjen	Star Market 4587	Dorchester	MA	02124	(617) 265-1776
TIN, Mimi Htwe	Shaw's 1208	East Boston	MA	02128	(617) 567-4116
ONG, Naing Ong	Big Y 14	East Longmeadow	MA	01028	(413) 504-6014
JIANG, Phoebe Bao Qian	Big Y 38	Franklin	MA	02038	(508) 553-8705
OO, Thu Zar	Shaw's 3590	Gloucester	MA	01930	(978) 281-4844
LIN, Hein Htet Naing	Big Y 22	Great Barrington	MA	01230	(413) 528-1314
MOE, Jessica	Big Y 63	Greenfield	MA	01301	(413) 772-0435
TUAN, Lang Kho	Hanscom AFB	HANSCOM AFB	MA	01731-6290	(781) 377-4210
WOSE, Xirao	Big Y 29	Holden	MA	01520	(508) 829-9614
CHEN, Ying Meng	Big Y 101	Kingston	MA	02364	(781) 585-7423
AUNG, Zaw Zaw	Big Y 37	Lee	MA	01238	(413) 504-6037
KHAING, Lai Lai	Donelan's 13	Lincoln	MA	01773	(781) 259-0144
KHAING, Lai Lai	Donelan's 11	Littleton	MA	01460	(978) 486-8986
HLAING, Khin Hsu	Big Y 13	Longmeadow	MA	01104	(413) 567-6231
MAUNG, Shan Y	Big Y 19	Ludlow	MA	01056	(413) 589-0161
MAUNG, Thandar	Big Y 104	Milford	MA	01757	(508) 422-9300
AUNG, Chan	Big Y 26	North Adams	MA	01247	(413) 663-6549
WU, Yong Fan	Shaw's 2408	North Easton	MA	02356	(508) 238-0165
ZAW, Win	Big Y 7	Northampton	MA	01060	(413) 584-6137
ZHANG, Ming Zhi	Big Y 103	Norwell	MA	02061	(781) 681-9322
HTET, Zarni	Big Y 126	Norwood	MA	02062	(781) 769-0905
TIN, David	Shaw's 690	Orleans	MA	02653	(508) 240-1021
KYAW, Kyaw	Big Y 20	Palmer	MA	01066	(413) 504-6020
LAUNG, Sai	Shaw's 2478	Peabody	MA	01960	(978) 532-5434
GAO, Jianchao	Big Y 23	Pittsfield	MA	01201	(413) 447-7301
LIN, YOU ZHI	Shaw's 2573	Quincy	MA	02169	(617) 770-0841
BRAHMACARIYA, FNU	Shaw's 418	Sharon	MA	02067	(781) 784-5995
CHEN, Melanie Wan	Shaw's 3580	Somerville	MA	02143	(617) 625-4070
NYENDAK, Kalsang	Big Y 108	South Easton	MA	02375	(508) 238-6305
GYALTSEN, Sherab	Big Y 50	South Hadley	MA	01075	(413) 538-9303
PAW, Than Tin	Big Y 11	Southampton	MA	01073	(413) 527-5500
HTOO, Kyaw	Big Y 24	Southbridge	MA	01550	(508) 764-6213
THAWNG, Kulh Lian	Big Y 8	Southwick	MA	01077	(413) 569-6163
MAUNG, Thandar	Big Y 27	Spencer	MA	01562	(508) 885-0003
THAWNG, Kulh Lian	Big Y 66	Springfield	MA	01128	(413) 782-0608
ZIN, Yin Hlaing	Big Y 134	Springfield	MA	01115	(413) 504-1278
MAUNG, Shan Y	Big Y 16	Springfield	MA	01129	(413) 783-9141
JUNGNEY, Yeshi	Big Y 1	Springfield	MA	01104	(413) 732-5177
JUNGNEY, Yeshi	Big Y 80	Springfield	MA	01104	(413) 784-0600
HENGLIN, Nglan	Big Y 131	UXBRIDGE	MA	01569	
LIN, Kyaw Htin	Big Y 65	Walpole	MA	02081	(508) 660-9710
GURUNG, Asha	Shaw's 2569	Waltham	MA	02451	(781) 891-0615
KYAW, Kyaw	Big Y 21	Ware	MA	01082	(413) 967-6181
SHWE, Thanda	Big Y 106	West Peabody	MA	01960	(978) 536-3200
HTET, Nyai W	Big Y 3	West Springfield	MA	01089	(413) 746-0999
WIN, Aung Myo	Big Y 68	Westfield	MA	01085	(413) 562-5230
MAR, Zin	Big Y 10	Westfield	MA	01085	(413) 568-1001

Zenshi Food Service Counters
Franchise List
As of March 31, 2026

TUN, May	Big Y 86	Wilbraham	MA	01095	(413) 543-0931
YANGDON, Tashi	Big Y 43	Worcester	MA	01602	(508) 793-9011
MADA, William	Shaw's 624	Worcester	MA	01605	(508) 852-7670
MYO, Raymond	Andrews AFB	Andrews AFB	MD	20762	(240) 857-6512
PAU ZA TUANG, Patrick	Annapolis	Annapolis	MD	21402	(240) 498-7666
THAN, Hrang	Harris Teeter 376	Baltimore	MD	21230	(410) 528-8484
SANG, Van Run	Harris Teeter 392	Baltimore	MD	21224	(410) 522-0270
LIAN, Bawi Tin	Harris Teeter 404	Bethesda	MD	20814	(240) 630-8635
TLEI, Do	Harris Teeter 324	Bowie	MD	20715	(301) 383-2935
LIAN, Saw Pum	Harris Teeter 487	California	MD	20619	(301) 737-2393
NIKAM, Tuan Cung Ceu	Harris Teeter 409	Clarksburg	MD	20871	(301) 916-7280
TONGBUNG, Margaret	Harris Teeter 322	Columbia	MD	21046	(410) 290-5902
LIAN, Titus	Harris Teeter 270	Dunkirk	MD	20754	(443) 550-1581
HLAING, Samuel Ko Ko	Harris Teeter 380	Easton	MD	21601	(410) 690-7203
GYI, Sai Koko	Harris Teeter 382	Ellicott City	MD	21042	(410) 313-8215
THANT, Orion	Fort Meade	Fort George G Meade	MD	20755	(301) 677-7286
CHAW, Fourkoko	Fort Detrick	Frederick	MD	21702	(301) 619-4219
OO, Tun	Harris Teeter 323	Fulton	MD	20759	(301) 635-5761
NIKAM, Tuan Cung Ceu	Harris Teeter 384	Gaithersburg	MD	20878	(301) 963-7904
WIN, Phyu Phyu	Harris Teeter 325	Germantown	MD	20874	(240) 631-1310
THAWNG, John S Ngun	Harris Teeter 408	Laurel	MD	20707	(301) 490-6039
KYI, Khin Maung	Patuxent River	NAS Patuxent River	MD	20670	(301) 342-3789
LIANI, Zo Siam	Harris Teeter 403	Olney	MD	20832	(301) 260-1792
TUN, Khin Thida	Harris Teeter 373	Potomac	MD	20854	(301) 294-5329
CHHAIHLO, Esther Ngopaw	Harris Teeter 364	Severna Park	MD	21146	(410) 544-5450
OO, Min Zaw	Shaw's 2550	Auburn	ME	04210	(207) 784-6971
OO, Min Zaw	Shaw's 4559	Lewiston	ME	04240	(207) 784-6900
TUN, Htoo	Martin's 19	Niles	MI	49120	(269) 684-2722
NG, Daniel K	Martin's 21	St. Joseph	MI	49085	(616) 983-1223
TUN, Htoo	Martin's 23	Stevensville	MI	49127	(269) 429-1711
Lin, Klara	Kowalski's 001	Eden Prairie	MN	55346	(952) 937-9585
PAING, Ye Yint	Kowalski's 4435	Edina	MN	55435	(651) 796-6098
VANG, Lue	Kowalski's 5420	Excelsior	MN	55331	(952) 229-8300
LEE, Naicheng Koobtsheej	Kowalski's 5368	Minneapolis	MN	55419	(612) 822-2935
LEE, Mai Kao	Kowalski's 5366	Minneapolis	MN	55405	(612) 377-3448
LEE, Mai Kao	Kowalski's 5369	Minneapolis	MN	55417	(612) 824-2430
THAO, Keng	Kowalski's 5435	Oak Park Heights	MN	55082	(651) 439-9161
NU, Wai	Kowalski's 5534	Shoreview	MN	55126	(651) 313-6868
VANG, Bee	Kowalski's 4434	St. Paul	MN	55105	(651) 698-3366
PEON, Nyee	Kowalski's 4727	White Bear Lake	MN	55110	(651) 429-5913
ZAW, Ne Myo	Cub Foods 5629	White Bear Lk	MN	55127	(651) 426-6534
HER, Rosie	Kowalski's 004	Woodbury	MN	55125	(651) 578-8800
KHUAL, Lian	Fort Leonard Wood	Fort Leonard Wood	MO	65473	(573) 596-0783
HMUN, Van Ro	Whiteman AFB	Whiteman AFB	MO	65305	(660) 687-5655
AYE, Nanghseng	Keesler AFB	Biloxi	MS	39534	(228) 377-4666
YIN, Nai Ong	Columbus AFB	Columbus AFB	MS	39710	(662) 434-7109
LIN, Nai Min	Gulfport NCBC	Gulfport	MS	39501	(228) 871-2039
VALENTINE, Elizabeth R.	Malmstrom AFB	Great Falls	MT	59402	(406) 770-6437
MYINT, Aung	Safeway 9	Belgrade	MT	59714	(406) 388-0901
TUN, Tun Gyi	Safeway 38	Billings	MT	59102	(406) 245-4118
TUN, Tun Gyi	Safeway 4041	Billings	MT	59102	(817) 232-2777
TIN, Ye Min Htut	Safeway 1227	Billings	MT	59105	(406) 245-8792
HTAY, Kyaw Win	Albertson's 630	Billings	MT	59102	(406) 656-8160
Htun, Thiha	Safeway 6	Bozeman	MT	59718	(406) 586-4785
Htun, Thiha	Safeway 2999	Bozeman	MT	59715	(406) 587-9017
NAING, Maung Than Aung	Safeway 3279	Butte	MT	59701	(406) 494-7046
NWE, Tin Mya	Safeway 1581	Dillon	MT	59725	(406) 683-5002
Estorque, Ayesha Gardose	Safeway 35	Great Falls	MT	59404	(406) 761-6800
FALALIMPA, Karell Ann Buyson Paule	Safeway 37	Great Falls	MT	59405	(406) 727-3700
TUN, Tun	Safeway 1486	Helena	MT	59601	(406) 443-1598
THANG, Tluang Za Hlei	Albertson's 18	Kalispell	MT	59901	(406) 257-7127
YAL, Maung	Safeway 42	Livingston	MT	59047	(406) 222-1177
NAING, Myo	Albertson's 1010	Missoula	MT	59801	(406) 549-1547
ZAW, May Pyone	Safeway 43	Missoula	MT	59808	(406) 728-1116
SHWE, Tway Tway Soe	Albertson's 24	Missoula	MT	59802	(406) 549-2351
LEL, Sei Kho	Safeway 1646	Polson	MT	59860	(406) 883-2340
THANG, Tluang Za Hlei	Safeway 2106	Whitefish	MT	59937	(406) 862-3006
WIN, Nyunt	Harris Teeter 29	Aberdeen	NC	28315	(910) 692-7029
MAN, Vung Zam	Publix 1544	Apex	NC	27502	(919) 303-6200
AUNG, Hnin San Di	Harris Teeter 335	Apex	NC	27502	(984) 319-1915
PAR, Ngun Pang	Harris Teeter 496	Apex	NC	27523	(919) 380-1422
CHIEN, Hon Chang	Harris Teeter 58	Apex	NC	27523	(919) 362-3782
BAWI, Lian Cung	Harris Teeter 348	Asheville	NC	28801	(828) 255-1817
CUNG, Ral	Publix 1473	Asheville	NC	28803	(828) 274-6287
CHEN, Guang	Harris Teeter 386	Belmont	NC	28012	(704) 825-6079
CUAI, Tin	Publix 1548	Boone	NC	28607	(828) 263-8126
KUAL, Lam Khan	Harris Teeter 165	Boone	NC	28607	(828) 262-3319
THIN, Mya	Harris Teeter 345	Burlington	NC	27215	(336) 585-1444
MAWI, Esther Lalen	Publix 1706	Burlington	NC	27215	(336) 586-1873
SAY, Lah	Camp Lejeune MCB	Camp Lejeune	NC	28547	(910) 451-5071
SUI, Esther Ngun Duh	Publix 1677	Carolina Beach	NC	28428	(910) 458-8615
OO, Zaw Lwin	Harris Teeter 297	Carrboro	NC	27510	(919) 942-8564
DUH, Tin Za	Harris Teeter 212	Carthage	NC	28327	(910) 246-0710
MAWI, Sui Nei	Publix 1520	Cary	NC	27518	(919) 303-4028
POOMSRI, Ratree	Harris Teeter 330	Cary	NC	27518	(919) 233-3476
KIMTEI, Tha Lian	Harris Teeter 430	Cary	NC	27511	(919) 481-4251
PAR, Kei Than	Harris Teeter 236	Cary	NC	27519	(919) 465-9432
DIKA, Lal Rin	Harris Teeter 331	Cary	NC	27518	(919) 387-8272
HNIN, Thawng Tha	Harris Teeter 138	Cary	NC	27519	(919) 467-1259

Zenshi Food Service Counters
Franchise List
As of March 31, 2026

Sung, Flora Cung-Nuam	Publix 1466	Cary	NC	27519	(919) 460-2082
LIAN BIK, Cung	Publix 1552	Cary	NC	27519	(919) 388-7201
OO, Maung Zaw Min	Harris Teeter 298	Cary	NC	27519-8341	(919) 460-3126
AYE, Naw A	Harris Teeter 257	Cary	NC	27518	(919) 233-9483
THANGA, Lal Lian	Harris Teeter 112	Cary	NC	27513	(919) 460-4326
THANGA, Lal Lian	Harris Teeter 494	Cary	NC	27513	(919) 380-9955
LUAI, Tin Kip	Harris Teeter 223	Chapel Hill	NC	27514	(919) 968-0110
TAN, Nai	Harris Teeter 120	Chapel Hill	NC	27517	(919) 932-5020
OO, Maung Zaw Min	Harris Teeter 137	Chapel Hill	NC	27517	(919) 960-0275
CEU, Biak	Harris Teeter 117	Chapel Hill	NC	27514	(919) 933-5700
KIM, Gin Khan	Publix 1824	Charlotte	NC	28277	(980) 273-7487
LIAN, Siang	Publix 1509	Charlotte	NC	28269	(704) 992-6951
SANG, Mung Kai	Publix 1518	Charlotte	NC	28211	(703) 373-2122
WIN, Ko Swe	Harris Teeter 220	Charlotte	NC	28262	(704) 717-7501
SI, Maung	Harris Teeter 294	Charlotte	NC	28226	(704) 542-6228
SANG, Bawi Hnin	Harris Teeter 401	Charlotte	NC	28205	(704) 375-8491
SUIZASIN, Veronica	Harris Teeter 66	Charlotte	NC	28277	(704) 341-7657
HUAI, Don	Harris Teeter 204	Charlotte	NC	28210	(704) 552-7212
VUNG, Khup Sian	Harris Teeter 61	Charlotte	NC	28203	(704) 375-5071
TAKNAN, Cangsawt	Harris Teeter 412	Charlotte	NC	28207	(704) 338-9100
KIL, Ni	Publix 1480	Charlotte	NC	28273	(704) 583-2323
THANG, Pau Min	Harris Teeter 317	Charlotte	NC	28277	(704) 714-4795
PAR, Biak C	Harris Teeter 366	Charlotte	NC	28216	(704) 949-2220
KIM, Esther	Publix 1453	Charlotte	NC	28203	(704) 373-2122
HNIANG, Ni	Harris Teeter 45	Charlotte	NC	28277	(704) 849-2776
NAWL, Za Biak	Publix 1483	Charlotte	NC	28273	(704) 587-0339
Tha, Si Le	Harris Teeter 440	Charlotte	NC	28277	(704) 303-8601
CIN, Lang Kai	Harris Teeter 305	Charlotte	NC	28209	(704) 527-1018
NAWL, Sang	Harris Teeter 3	Charlotte	NC	28278	(704) 587-1011
MUNG, Cin Khan	Harris Teeter 218	Charlotte	NC	28209	(704) 523-8106
KAP, Dal Khan	Harris Teeter 205	Charlotte	NC	28202	(704) 332-8479
MANG, Van Lal	Harris Teeter 46	Charlotte	NC	28215	(704) 599-8449
THAWNG, Biak	Harris Teeter 11	Charlotte	NC	28277	(704) 716-2000
Dawnga, Mal Sawm	Harris Teeter 30	Charlotte	NC	28226	(704) 544-3340
PAU, Thang Lian	Harris Teeter 122	Charlotte	NC	28269	(704) 875-0993
HON, Niang Sian	Publix 2017	CHARLOTTE	NC	28226	(704) 496-5209
KIM, Lun Don	Publix 1881	Charlotte	NC	28227	(980) 365-9803
THANG, Kio Cin	Harris Teeter 160	Charlotte	NC	28211	(704) 364-1245
CEU, William Vanbiak	Harris Teeter 27	Charlotte	NC	28277	(704) 752-1013
THAN, Khin Maw	Publix 1442	Charlotte	NC	28277	(704) 716-2344
LAW, Siu	Harris Teeter 88	Charlotte	NC	28278	(704) 587-9970
NAING, Win Thein	Harris Teeter 208	Charlotte	NC	28211	(704) 366-1675
NAING, Win Thein	Harris Teeter 258	Charlotte	NC	28213	(704) 593-1395
OO, Myint Myint	Harris Teeter 472	Charlotte	NC	28269	(704) 597-7014
SANG, Paul Van Biak	Harris Teeter 4	Charlotte	NC	28226	(704) 341-3688
HTOO, Kay Kaw	Harris Teeter 229	Clayton	NC	27527	(919) 359-9154
THAN, Hrang	Publix 1727	Clayton	NC	27527	(919) 550-2812
CIN, Sian Kip	Publix 1574	Clemmons	NC	27012	(336) 766-2069
JOHN LAL TAN, Thang	Harris Teeter 228	Clemmons	NC	27012	(336) 778-1445
SANG, Mung Kai	Publix 1490	Concord	NC	28027	(704) 795-7127
U, Bi	Harris Teeter 190	Concord	NC	28027	(704) 721-0735
UK, Thawng	Harris Teeter 68	Concord	NC	28027	(704) 786-2510
UK, Thawng	Harris Teeter 202	Concord	NC	28025	(704) 795-9351
KERO, Bei	Harris Teeter 179	Cornelius	NC	28031	(704) 895-5020
THANG, Pau Khan	Publix 1474	Cornelius	NC	28031	(704) 895-7057
LIAN, Niang Pan	Harris Teeter 416	Cornelius	NC	28031	(704) 895-5351
JEROME, Saw	Harris Teeter 266	Corolla	NC	27927	252.453.0153
SOE, Saw Soe	Harris Teeter 471	Davidson	NC	28036	(704) 439-4042
KHAI, Cho	Harris Teeter 268	Davidson	NC	28036	(704) 892-0597
LIN, Soe	Harris Teeter 121	Denver	NC	28037	(704) 820-0332
LUAI, Mang	Publix 1603	Denver	NC	28037	(704) 483-7152
Mang, Ji Remmawi	Harris Teeter 491	Durham	NC	27713	(919) 361-9893
LIAN, Josephlal	Harris Teeter 493	Durham	NC	27712	(919) 471-6263
HTET, Ye	Harris Teeter 394	Durham	NC	27705	(919) 286-1500
ZIN, May Oo	Harris Teeter 172	Durham	NC	27707	(919) 489-9887
Ha, Min Thi	Publix 1817	Durham	NC	27703	(863) 688-1188
SAILO, Biakhnuna	Harris Teeter 492	Durham	NC	27705	(919) 383-2249
SOE, Nai Hlaing	Harris Teeter 497	Durham	NC	27705	(919) 220-5761
ZUL, Peter Siang Nawl	Harris Teeter 224	Durham	NC	27707	(919) 403-0794
LIAN, LAL	Harris Teeter 254	Durham	NC	27705	(919) 471-1938
MON, Ban Yar	Publix 1623	Emerald Isle	NC	28594	(252) 354-2104
OO, Thet	Harris Teeter 25	Fayetteville	NC	28303	(910) 484-6000
PHYU, Naw Htar	Harris Teeter 393	Fayetteville	NC	28306	(910) 424-3505
MOO, Ku	Publix 1575	Fayetteville	NC	28303	(910) 321-0114
PAW, Naw Ka Nyaw	Fort Liberty North	Fort Bragg	NC	28307	(910) 396-2316
KANG, Maro	Fort Liberty South	Fort Bragg	NC	28310	(910) 853-7333
LIAN, Centenary Diamond Medal	Harris Teeter 498	Fuquay-Varina	NC	27526	(919) 567-7423
CHIN, Hniang	Publix 2031	Garner	NC	27529	(800) 242-1227
Sang, Cung Nung	Publix 1521	Gastonia	NC	28054	(704) 853-7000
KHAING, Aye Aye	Harris Teeter 281	Gastonia	NC	28054	(704) 524-3590
BIGJAHONGSAR, Lyah Non	Harris Teeter 115	Goldsboro	NC	27534	(919) 734-3534
RUATA, Lal Rem	Harris Teeter 347	Greensboro	NC	27408	(336) 545-1354
NAING, Soe	Harris Teeter 306	Greensboro	NC	27410	(336) 297-1361
THAWN, Thang Lam	Publix 1658	Greensboro	NC	27407	(336) 894-2591
FEL, Lal Dik	Harris Teeter 280	Greensboro	NC	27410	(336) 288-2203
MUANA, Lal Rin	Harris Teeter 64	Greensboro	NC	27407	(336) 854-4050
PAR, Sui Rem	Harris Teeter 342	Greensboro	NC	27410	(336) 855-9095
HUM, Andrew	Harris Teeter 33	Greensboro	NC	27410	(336) 856-8140
HUM, Andrew	Harris Teeter 91	Greensboro	NC	27455	(336) 545-0236

Zenshi Food Service Counters
Franchise List
As of March 31, 2026

BOY, Nehemiah	Publix 1569	Greenville	NC	27858	(252) 756-4682
SAM ZA, David	Harris Teeter 287	Greenville	NC	27858	(252) 355-0125
SAM ZA, David	Harris Teeter 362	Greenville	NC	27834	(252) 353-4400
DEEBAING, Khamlum	Harris Teeter 135	Hampstead	NC	28443	(910) 329-0711
HNIN, Timawte	Publix 1619	Hampstead	NC	28443	(910) 329-1000
SANG, Mung Kai	Publix 1555	Harrisburg	NC	28075	(704) 454-7832
LIAN, Ni Ceu	Harris Teeter 92	Harrisburg	NC	28075	(704) 454-9905
WAH, Naw Eh	Cherry Point MCAS	Havelock	NC	28533	(252) 466-0802
BAWI, Lian Cung	Harris Teeter 379	Hendersonville	NC	28792	(828) 693-6668
CHIN, Ruby Sui Tha	Publix 1586	Hendersonville	NC	28792	(828) 694-4440
PIANG, William	Publix 1550	Hickory	NC	28601	(828) 322-3675
CUNG, Zo Duh	Harris Teeter 341	High Point	NC	27262	(336) 869-6317
LAMUNG, Jessica Dumdaw	Publix 1582	High Point	NC	27262	(336) 905-8610
MUANA, Lal Rin	Harris Teeter 173	High Point	NC	27265	(336) 841-1144
HLAING, Myint Ko	Harris Teeter 118	Holly Springs	NC	27540	(919) 363-3059
SORN, Nai Ong Layi	Harris Teeter 311	Holly Springs	NC	27540	(919) 552-1596
AUNGCHIT, Saw Shwe Hlahtun	Harris Teeter 272	Huntersville	NC	28078	(704) 892-1197
AUNGCHIT, Saw Shwe Hlahtun	Harris Teeter 340	Huntersville	NC	28078	(704) 895-2594
Moe, Tin Tin	Publix 1765	Huntersville	NC	28078	(704) 977-0021
PHABU, Rebecca	Harris Teeter 209	Huntersville	NC	28078	(704) 875-9703
NAING, Soe	Publix 1481	Huntersville	NC	28078	(704) 948-4801
WIN, Ko Swe	Harris Teeter 129	Indian Trail	NC	28079	(704) 289-1156
KYAW, Klaw Klay Paw	Publix 1660	Jacksonville	NC	28546	(910) 353-0433
THANG, Za Lian Ngun Cung	Harris Teeter 250	Kernersville	NC	27284	(336) 992-9735
GONZALEZ MORENO, Orlando	Harris Teeter 175	Kill Devil Hills	NC	27948	(252) 449-9191
SWE, Than Than	Publix 1615	Kill Devil Hills	NC	27948	(252) 255-5006
JEROME, Saw	Harris Teeter 387	Kitty Hawk	NC	27949	(252) 261-1931
KYI, Le Le	Harris Teeter 225	Leland	NC	28451	(910) 371-3944
Tluanga, Joseph Lalzui	Publix 1704	Marvin	NC	28173	(704) 843-0119
LIU, James Zhi Yan	Harris Teeter 157	Matthews	NC	28105	(704) 846-7117
REM, Ngun Zung	Harris Teeter 473	Matthews	NC	28104	(704) 882-2277
THANG, Kaam Sian	Publix 1484	Matthews	NC	28105	(704) 814-6001
HTAY, Hninnu	Harris Teeter 147	Matthews	NC	28105	(704) 841-1810
VUNG, Don Lam	Harris Teeter 249	Matthews	NC	28104	(704) 843-4100
CING, Khawl Za	Harris Teeter 273	Matthews	NC	28104	(704) 234-0405
CIIN, Khawl Ngaih	Harris Teeter 39	Matthews	NC	28104	(704) 882-2749
CEU, William Vanbiak	Harris Teeter 343	Matthews	NC	28105	(704) 847-5955
NAING, Win Thein	Harris Teeter 1	Matthews	NC	28105	
PIANG, Huat Deih	Publix 1470	Mint Hill	NC	28227	(704) 573-0234
KHUP, Huat Za	Harris Teeter 474	Mint Hill	NC	28227	(704) 545-3281
SUI, Biak Mi	Publix 1556	Monroe	NC	28110	(704) 289-6598
KHAI, Do Suan	Publix 1519	Mooresville	NC	28117	(704) 660-6800
SOE, Saw Soe	Harris Teeter 274	Mooresville	NC	28117	(704) 799-2004
OO, Saw Peter	Harris Teeter 99	Mooresville	NC	28117	(704) 799-1066
KHAI, Hau Sian	Publix 1872	MOORESVILLE	NC	28115	(863) 688-1188
UK, Sang	Harris Teeter 265	Morehead City	NC	28557	(252) 240-3742
BACKHAM, Smith	Harris Teeter 104	Morrisville	NC	27560	(919) 380-0354
NOUNG, Saw Noung	Harris Teeter 139	New Bern	NC	28562	(252) 631-5226
RALTE, Zothan Sanga	Harris Teeter 421	New Bern	NC	28562	(252) 514-0060
TUN, Myint Myint	Publix 1533	New Bern	NC	28562	(252) 634-1646
MANG, Langh Kim	Publix 1703	Oak Island	NC	28465	(910) 278-6785
HAM, Van Ceu	Publix 1631	Ocean Isle Beach	NC	28469	(910) 393-2059
SUN, Roni Stewart	Harris Teeter 80	Pinehurst	NC	28374	(910) 255-0104
MYINT, Khin Than	Harris Teeter 21	Raleigh	NC	27605	(919) 828-9216
CEM, Tluang	Harris Teeter 90	Raleigh	NC	27613	(919) 676-3534
SOE, Zaw Min	Harris Teeter 283	RALEIGH	NC	27518	(919) 772-0241
THEIN, Yi Mon	Harris Teeter 495	Raleigh	NC	27613	(919) 659-8221
DARA, Thoon	Harris Teeter 422	Raleigh	NC	27609	(919) 781-4165
KI, Lai Mang	Harris Teeter 136	Raleigh	NC	27615	(919) 676-6614
KI, Lai Mang	Harris Teeter 367	Raleigh	NC	27614	(919) 554-4167
SAILO, Biakhnuna	Harris Teeter 304	Raleigh	NC	27617	(919) 596-5399
VENG, Lal Than	Publix 1652	Raleigh	NC	27603	(919) 755-5444
THU, Chit Min	Publix 1886	RALEIGH	NC	27616	
AUNG, Kyaw Min	Harris Teeter 26	Raleigh	NC	27613	(919) 848-1464
HNEI, Sui	Publix 1551	Raleigh	NC	27613	(919) 848-3480
SIKE, Nai	Harris Teeter 69	Raleigh	NC	27612	(919) 781-8776
AYE, Naw A	Harris Teeter 289	Raleigh	NC	27608	(919) 787-5526
LWIN, Maung Maung	Harris Teeter 319	Raleigh	NC	27612	(919) 787-1364
HTAY, Zaw Min	Harris Teeter 344	Raleigh	NC	27609	(919) 872-5786
GOO, Al	Harris Teeter 63	Rocky Mount	NC	27804	(252) 937-2535
SUBIA, Jeramiah	Publix 1855	Rolesville	NC	27571-8800	(919) 987-1002
PAO, Hem Len	Harris Teeter 178	Salisbury	NC	28144	(704) 633-1658
MOLO, Podah S	Seymour Johnson AFB	Seymour Johnson AFB	NC	27534	(919) 722-0321
WIN, Tun Tun	Publix 1583	Sherrills Ford	NC	28673	(828) 478-2644
AUNG, Kyaw	Publix 1539	Statesville	NC	28625	(704) 878-4073
NAING, Soe	Harris Teeter 43	Wake Forest	NC	27587	(919) 562-9521
KHAWNG, Joseph	Harris Teeter 353	Wake Forest	NC	27587	(919) 554-3608
THAR, VAN L	Publix 1514	Wake Forest	NC	27587	(919) 556-6671
HTAY, Zaw Min	Harris Teeter 395	Wake Forest	NC	27587	(919) 870-4980
CING, Ngai Hei Nuam	Harris Teeter 182	Waxhaw	NC	28173	(704) 243-1238
PAR, Ni Hluan	Publix 1640	Waynesville	NC	28786	(828) 454-5700
PAR, Ni Hluan	Publix 1546	Weaverville	NC	28787	(828) 658-1020
TUN, Han Win	Publix 1744	Wendell	NC	27591	(919) 365-7055
MYINT, Htay Htay	Harris Teeter 162	Wilmington	NC	28403	(910) 343-4216
TUN, Nay Myo Han	Harris Teeter 191	Wilmington	NC	28411	(910) 681-0571
THANG, Peter Hrang Lian	Publix 1580	Wilmington	NC	28411	(910) 681-3555
THU, Kyaw	Harris Teeter 264	Wilmington	NC	28412.	(910) 444-0241
THAWM, Ngun	Harris Teeter 301	Wilmington	NC	28403	(910) 256-2015
AYE, Ma Myat Myat	Harris Teeter 210	Wilmington	NC	28405	(910) 256-1071

Zenshi Food Service Counters
Franchise List
As of March 31, 2026

HTOO, Muh Gaw	Harris Teeter 158	Wilmington	NC	28403	(910) 452-9242
NYUNT, Hein Zaw	Harris Teeter 96	Wilmington	NC	28412	(910) 796-3091
KIM, Ngun Nei	Publix 1516	Wilmington	NC	28412	(910) 313-2201
ZAW, Maung Maung	Harris Teeter 441	Wilmington	NC	28412	(910) 791-4505
QUINT, Jin	Harris Teeter 354	Wilson	NC	27896	(252) 206-0831
LIANA, Hrang	Harris Teeter 346	Winston Salem	NC	27106	(336) 761-0734
VENA, Van Lal	Harris Teeter 37	Winston-Salem	NC	27104	(336) 245-0467
VENA, Van Lal	Harris Teeter 127	Winston-Salem	NC	27106	(336) 760-0116
CIN, Sian Kip	Publix 1475	Winston-Salem	NC	27104	(336) 724-3707
THANGI, Lal Chhuan	Harris Teeter 155	Winston-Salem	NC	27103	(336) 723-2305
Lahkyu, Aung Limarip	Publix 1858	Winston-Salem	NC	27106	(800) 242-1227
REBECCA, Naw	Harris Teeter 334	Winston-Salem	NC	27106	(336) 923-2441
THANT, Myo Kyaw	Harris Teeter 216	Winston-Salem	NC	27103	(336) 777-1075
WIN, Maung Hla	Grand Forks AFB	Grand Forks AFB	ND	58205	(701) 747-3083
MON, Nai Lawi	Minot AFB	Minot AFB	ND	58705	(312) 453-4322
KARENG, Roitawng	Offutt AFB	Offutt AFB	NE	68113	(402) 294-6783
LWIN, Khun Nay Myo	Hanover Co-Op 2	Hanover	NH	03755	(603) 643-2667
OO, Sann Tun	Hanover Co-op	Lebanon	NH	03766	(603) 643-4889
PAU, Mang Siang	Shaw's 113	Nashua	NH	03060	(603) 579-6966
PAU, Mang Siang	Shaw's 3510	Nashua	NH	03062	(603) 891-1649
TUN, Thant Zin	Cooper University Hospital	Camden	NJ	08103	(856) 207-0542
MIN, Wai Mar	McGuire AFB	McGuire AFB	NJ	08641	(609) 754-2153
SAZUL, Lian Bik	Albertson's 681	Alamogordo	NM	88310	(575) 488-1200
KO, Minn Ko	Lowe's Corner Market 55	Alamogordo	NM	88310	(575) 437-5150
OO, Khin Thetmar	Lowe's Corner Market 98	Albuquerque	NM	87102	(505) 247-8399
CHA, Hoon	Kirtland AFB	Albuquerque	NM	87117	(505) 846-4902
GABRIEL, Christopher Ngwe Soe	Albertson's 905	Albuquerque	NM	87112	(505) 299-3800
GABRIEL, Christopher Ngwe Soe	Albertson's 939	Albuquerque	NM	87111	(505) 275-7000
WIN, Thin Nandar	Albertsons 928	Albuquerque	NM	87112	(505) 293-9280
WIN, Thin Nandar	Albertson's 924	Albuquerque	NM	87122	(505) 822-8383
CHO, Mar Mar	Albertson's 915	Albuquerque	NM	87120	(505) 897-1800
OO, Shwe Zin	Albertson's 911	ALBUQUERQUE	NM	87112	(505) 298-7571
CEU, Tha	Albertson's 937	Albuquerque	NM	87114	(505) 897-3884
MUNG, Sian Khan	Albertson Market 938	Albuquerque	NM	87109	(505) 821-9655
SAWKO, Myat	Albertsons 904	Albuquerque	NM	87109	(505) 883-8706
MOE, Kyaw	Safeway 1438	Aztec	NM	87410	(505) 334-7334
LIN, Nathan	Cannon AFB	Cannon AFB	NM	88103	(575) 904-1036
SIAKHEL, Khin Maungthui	United Market 665	Carlsbad	NM	88220	(575) 885-2161
MOE, Kyaw	Safeway 2004	Farmington	NM	87402	(505) 327-3349
LIAN, Joseph Thawng	Safeway 1743	Gallup	NM	87301	(505) 722-7620
SAZUL, Ngun Tinlian	Albertson's 680	Hobbs	NM	88240	(575) 392-4514
Mang, Dawt Ceu	Holloman AFB	Holloman AFB	NM	88330	(575) 572-5127
KYAW, Tin Maung Lat	Albertson's 925	Las Cruces	NM	88011	(575) 521-9837
MIN, Nyi Nyi	Albertson's 919	Los Lunas	NM	87031	(505) 865-3313
HLEI, Van Tha	Albertson's 656	Lovington	NM	88260	(575) 659-3120
ZING, Dawt Len	United Market Street 921	RIO RANCHO	NM	87124	(806) 791-8113
LIN, Tun Tun	Albertson's 923	Rio Rancho	NM	87144	(505) 771-7082
SAWKO, Myat	Albertson's 903	Rio Rancho	NM	87124	(505) 892-0122
TUNG, Biak	Albertson's 690	Rosewell	NM	88203	(505) 623-9300
HMUNG, Kep	United Market 682	Ruidoso	NM	88345	(575) 257-4014
AUGUSTIN, Sa	Albertson's 927	Santa Fe	NM	87501	(505) 982-4806
HTIKE, Zin Lin	Albertson's 986	Santa Fe	NM	87507	(505) 471-2914
HTIKE, Zin Lin	Albertson's 987	Santa Fe	NM	87505	(505) 992-8638
THANT, Sai Aung	Albertson's 920	Taos	NM	87571	(575) 758-1250
HNIN, Kam	Albertson's 155	Elko	NV	89801	(775) 738-8016
KHAING, Phyu Min	Von's 2615	Henderson	NV	89012	(702) 558-3966
Kim, Sung Ho	Safeway 2804	Las Vegas	NV	89178	(702) 614-4221
KHAING, Phyu Min	Vons 2390	Las Vegas	NV	89123	(702) 896-7544
MIN, TED AUNG	Safeway 3489	Las Vegas	NV	89149	(702) 670-4942
TUN, Aung Min	Nellis AFB	Nellis AFB	NV	89191	(702) 632-5500
HUANG, Liping	Safeway 188	Reno	NV	89521	(775) 332-0910
HLAING, Theingi Soe	Safeway 2656	Sparks	NV	89434	(270) 352-8470
LWIN, Nu Nu	Fort Hamilton AFB	Brooklyn	NY	11252	(718) 630-4960
MYINT, Zaw Zaw	Fort Drum	Fort Drum	NY	13602	(315) 772-7457
LIAN, Biak Za	Saratoga Springs	Saratoga Springs	NY	12866	(518) 581-2181
WIN, Zinmar Phyu	West Point	West Point	NY	10996	(845) 938-3663
Mang, Van Tawk	Wright Patterson AFB	Dayton	OH	45433	(937) 257-3592
OO, Thant Zin	Altus AFB	Altus	OK	73523	(580) 481-7397
MANG, Vungh Mung	Fort Sill	Fort Sill	OK	73503	(580) 442-2305
PU, Tuang	Tinker AFB	Tinker AFB	OK	73145	(405) 734-5965
LIAN, Van Ro	Safeway 3557	Aloha	OR	97078	(503) 642-7059
XIANG, Qian	Safeway 3212	Ashland	OR	97520	(541) 482-7777
AUNG, Aung Ko-Lwin	Safeway 2627	Astoria	OR	97103	(503) 338-2960
CIANG, Kim Khan	Safeway 1073	Beaverton	OR	97005	(503) 641-5262
PAU, Zam Lam	Safeway 2631	Beaverton	OR	97007	(503) 590-9755
NAING, Tun Tun	Newport Market	Bend	OR	97703	(541) 382-3940
YUTJAROEN, Daungporn	Safeway 1504	Bend	OR	97701	(541) 383-6500
YUTJAROEN, Daungporn	Safeway 1888	Bend	OR	97702	(541) 389-0085
PIANG, Nang Muan	Safeway 1231	Clackamas	OR	97015	(503) 698-1121
DAHKUM, Deezi	Safeway 1765	Corvallis	OR	97333	(541) 738-2100
NAING, Nyi	Safeway 4404	Dallas	OR	97338	(503) 831-6000
RAM, Phong	Safeway 4288	Eugene	OR	97401	(541) 485-5051
WAI, Thet	Safeway 420	Eugene	OR	97401	(541) 685-8873
WAI, Thet	Safeway 572	Eugene	OR	97401	(541) 342-7635
SUAN, Dai Khan	Safeway 406	Forest Grove	OR	97116	(503) 359-8700
MAHKAW, Yaw Htung	Safeway 591	Hillsboro	OR	97124	(503) 681-8927
THU, Aung Mway	Safeway 1123	Hood River	OR	97031	(541) 386-1841
SING, Khai Muan	Safeway 1516	Keizer	OR	97303	(503) 390-8810
KIM, Zen Don	Safeway 508	Lake Oswego	OR	97034	(503) 675-4480

Zenshi Food Service Counters
Franchise List
As of March 31, 2026

CINGH, Dim Lun	Safeway 1047	Lake Oswego	OR	97035	(503) 675-2500
NYOI, Ze	Safeway 415	Lincoln City	OR	97367	(541) 994-8667
SANG, Philip Lian Deh	Safeway 1601	McMinnville	OR	97128	(503) 435-3120
CIN GO KAP, Mark	Safeway 1751	Molalla	OR	97038	(503) 829-4848
HEI, Thang	Safeway 1557	North Bend	OR	97459	(541) 751-7000
MAI , Phan Tu Loan	Safeway 2993	Oregon City	OR	97045	(503) 655-8155
THANG, Hau Lian	Safeway 3134	Portland	OR	97214	(503) 236-7070
SANG, Zam Lam	Safeway 1627	Portland	OR	97202	(503) 772-4440
AUNG, Win Kyaw Thu	Safeway 1478	PORTLAND	OR	97224	(503) 598-6001
SUAN, Dai Khan	Safeway 1525	Portland	OR	97229	(503) 350-2080
HLAING, Hnin Nandar	Safeway 1523	Portland	OR	97206	(503) 788-7600
PIANG, Kam Hau	Providence Portland Medical Center	Portland	OR	97213	(503) 215-1111
KHUN, Tha	Safeway 1447	Portland	OR	97213	(503) 280-1200
OO, Shine K	Safeway 2790	Portland	OR	97209	(503) 205-6746
HONGSA, Nai	Safeway 2448	Portland	OR	97201	(503) 205-1849
NAING, Nyi	Safeway 412	Salem	OR	97304	(503) 365-2170
THANG, Joseph	Safeway 1935	Salem	OR	97306	(503) 364-4192
DENG, Feng Juan	Safeway 1260	Seaside	OR	97138	(503) 738-4700
AUNG, Win Kyaw Thu	Safeway 1800	Sherwood	OR	97140	(503) 625-4760
ZAW, Nyi Nyi	Melvin's by Newport	Sisters	OR	97759	(541) 549-0711
OO, Aung Ye	Albertson's 574	Springfield	OR	97478	(541) 746-1653
ZAW, Nyi Nyi	Newport Market 4	Terrebonne	OR	97760	(541) 382-3940
CIANG, Kim Khan	Albertson's 3542	Tigard	OR	97223	(503) 590-0543
LAITHANG, Yenaing	Safeway 536	Troutdale	OR	97060	(503) 667-1722
TOO, Too	Safeway 1713	West Linn	OR	97068	(503) 650-8954
QI, Qi	Safeway 285	Wilsonville	OR	97070	(503) 682-9053
SANG, Guowet Willie	Fort Buchanan	Fort Buchanan	PR	00934-4576	(787) 707-2078
NAING, Win	Shaw 1435	Barrington	RI	02806	(401) 245-5882
MAY, Mya Mya	Shaw's 1442	Middletown	RI	02842	(401) 848-7560
HTUN, Sai Swan	Newport NS	Newport	RI	02841	(401) 841-2111
NAWL, Za	Publix 506	Aiken	SC	29803	(803) 643-7970
HLAWN, Van Sui	Publix 2040	Aiken	SC	29803	
DIK, Joseph Tan	Publix 563	Anderson	SC	29621	(864) 231-1170
VUNG, Ngun	Publix 360	Anderson	SC	29621	(864) 231-5240
SWE, Thet Hta	Publix 1463	Beaufort	SC	29907	(843) 770-0026
BAWILIANSANG, James	Publix 1716	Beaufort	SC	29906	(800) 242-1227
SUNG, Za Meng	Harris Teeter 429	Beaufort	SC	29907	(800) 432-6111
SWE, Thet Hta	Publix 845	Bluffton	SC	29910	(843) 706-3049
RAM, Uk Thang	Publix 1205	Bluffton	SC	29910	(843) 815-6430
REM, Ngun Hlei	Publix 1714	Bluffton	SC	29910	(843) 815-3800
KIM, Morris Lalruat	Publix 1856	BOILING SPRINGS	SC	29316	(863) 688-1188
PAN, Ja Seng	Publix 1511	Chapin	SC	29036	(803) 345-7536
ZAW, Khoung Htut	Harris Teeter 455	Charleston	SC	29412	(843) 795-9091
PENG, Tluang	Harris Teeter 410	Charleston	SC	29407	(843) 763-7283
ZHENG, Mei Feng	Publix 1599	Charleston	SC	29403	(843) 720-7000
HAN, Khun Thar Min	Publix 472	Charleston	SC	29407	(843) 852-3350
SANG, Biak	Harris Teeter 453	Charleston	SC	29412	(843) 762-6255
ZU, Mya Myint	Harris Teeter 365	Charleston	SC	29407	(843) 556-5351
THWIN, Myo	Harris Teeter 28	Charleston	SC	29412	(843) 406-8977
THWIN, Myo	Harris Teeter 456	Charleston	SC	29412	(843) 762-2124
PENG, Za	Publix 633	Charleston	SC	29412	(843) 762-5670
PENG, Za	Publix 1645	Charleston	SC	29412	(843) 762-5570
TUNE, Joseph	Harris Teeter 277	Charleston	SC	29401	(843) 722-6821
TUNE, Joseph	Harris Teeter 406	Charleston	SC	29414	(843) 619-2901
PHYO, Ei Paing	Charleston AFB Ranked # 75	Charleston AFB	SC	29404	(843) 963-7469
BIAKKOONG, Hilda Ianghnemmawi	Publix 1646	Charleston-Berkeley	SC	29492	(843) 856-5193
HOI, Bual Kip	Publix 1379	Clemson	SC	29631	(864) 654-3776
THANG, Siang Hnin	Publix 829	Columbia	SC	29229	(803) 699-8131
NAWL, Za	Publix 597	Columbia	SC	29206	(803) 790-4920
THAWNG, Chan Lian	Publix 587	Columbia	SC	29223	(803) 788-9484
IANG, Biak	Publix 2001	Columbia	SC	29229	(803) 469-0441
AUNG, Zaw Win	Publix 1095	Columbia	SC	29201	(803) 255-4351
SUN, Kyu Kyu	Publix 067	Columbia	SC	29205	(803) 806-8839
THAWNG, Za	Publix 656	Columbia	SC	29212	(803) 407-0449
RING ZAI, Thang Ci	Publix 883	Columbia	SC	29212	(803) 407-2216
CHIN, ZING BOR	Publix 2090	DANIEL ISLAND	SC	29492-8024	
PUI, Than Sang	Publix 543	Duncan	SC	29334	(864) 486-4700
HLAWNMUAL, Sarah Vansuipar	Publix 205	Easley	SC	29640	(864) 850-2270
LAI, Maung	Harris Teeter 124	Florence	SC	29501	(843) 678-9525
MANG, Biak	Fort Jackson Commissary	Fort Jackson	SC	29207-6060	(803) 751-5789
MUNG, Pau Khat	Harris Teeter 82	Fort Mill	SC	29708	(803) 396-0440
MOE, Nan Aye Thidar	Publix 1419	Fort Mill	SC	29708	(419) 782-0950
KIM, Lal Ruat	Harris Teeter 475	Fort Mill	SC	29708	(803) 548-6612
CEU, Tluang	Harris Teeter 370	Fort Mill	SC	29715	(803) 547-0520
PHYO, Ei Paing	Charleston NWS	Goose Creek	SC	29445	(843) 794-2020
LYAN, Venus Parchin	Harris Teeter 420	Greenvile	SC	29605	(864) 977-8041
MAWI, Ram Nei	Publix 530	Greenville	SC	29607	(864) 987-7080
NEI, Van Pek	Publix 602	Greenville	SC	29607	(864) 250-4700
MAWI, Lal Nei	Publix 874	Greenville	SC	29615	(864) 370-8210
THLUAI, Mang Men	Publix 1767	Greenville	SC	29617	(864) 294-4430
PAR, Jenny No Than	Publix 2100	Greenville	SC	29605	
PIANG, Steven	Harris Teeter 357	Greenville	SC	29609	(864) 900-6150
LIAN, Lal Din	Publix 1148	Greenville	SC	29601	(864) 240-2015
SANG, SAMUEL	Publix 1464	Greenwood	SC	29649	(864) 223-8902
SUI, Mai	Publix 531	Greer	SC	29650	(864) 848-7820
LAL, Biaktin Sung	Harris Teeter 291	Greer	SC	29650	(864) 584-7301
REM, Ngun Hlei	Publix 1354	Hardeeville	SC	29927	(843) 208-3600
HE-SA, Ngun Aung	Publix 700	Hilton Head	SC	29928	(843) 842-2632
SUNG, Dawt Len	Harris Teeter 152	Hilton Head	SC	29926	(843) 689-6255

Zenshi Food Service Counters
Franchise List
As of March 31, 2026

HE-SA, Ngun Aung	Publix 473	Hilton Head Island	SC	29926	(843) 689-9977
THANG, Pau Min	Harris Teeter 372	Indian Land	SC	29707	(803) 802-5300
CIN, Lo Deih	Publix 1412	Indian Land	SC	29707	(803) 548-9000
LIAN, Hong	Publix 017	Irmo	SC	29063	(803) 407-0127
KHENGLAWT, Katherine Biakhleizing	Harris Teeter 452	Isle of Palms	SC	29451	(843) 886-6506
HLAWNMUAL, Valpuia	Harris Teeter 451	Johns Island	SC	29455	(843) 243-3276
THU, Ma Khin Myo	Publix 1145	Johns Island	SC	29455	(843) 573-8734
CUAI, Duhkip	Publix 1486	Lake Wylie	SC	29710	(803) 831-5667
THANG, Siang Hnin	Publix 1637	Lexington	SC	29073	(803) 358-9587
THAWNG, Za	Publix 512	Lexington	SC	29072	(803) 951-3999
LIAN, Hong	Publix 1383	Lexington	SC	29072	(803) 996-6160
CANG, Hannah Van Rem	Publix 1012	Mauldin	SC	29662	(864) 987-1601
CIN, Nang Van	Publix 1775	Moncks Corner	SC	29461	(843) 761-7741
SUANG, Cin Mung Mun	Harris Teeter 457	Mt Pleasant	SC	29464	(843) 884-4489
LIZAMA, Anselmo Lisua	Publix 449	Mt. Pleasant	SC	29464	(843) 856-3000
LIZAMA, Anselmo Lisua	Publix 1055	Mt. Pleasant	SC	29464	(843) 856-3018
BIK, Thawng Tha	Harris Teeter 131	Mt. Pleasant	SC	29466	(843) 971-3611
CHIN, ZING BOR	Publix 1081	Mt. Pleasant	SC	29466-6974	(843) 388-2263
MOIA, Zothan	Harris Teeter 19	Mt. Pleasant	SC	29464	(843) 881-1983
MOIA, Zothan	Harris Teeter 385	Mt. Pleasant	SC	29466	(843) 881-2622
LIAN, Zuni	Harris Teeter 87	Mt. Pleasant	SC	29464	(843) 856-4631
THWE, Yin Yin	Publix 1568	Murrells Inlet-Horry	SC	29576	(843) 357-0739
HIMI, Lal Run	Publix 1524	Myrtle Beach	SC	29572	(843) 449-1660
SANG, Biak Nun	Publix 1510	Myrtle Beach	SC	29579	(843) 903-4615
SANG, Biak Nun	Publix 1812	Myrtle Beach	SC	29579	(843) 798-4062
AUNG, Kyat Thein	Publix 1806	Myrtle Beach	SC	29577	(843) 293-1012
LIAN, Thawng	Publix 486	North Augusta	SC	29841	(803) 441-3900
UK, Phuntin	Publix 824	North Charleston	SC	29420	(843) 767-5970
HIMI, Lal Run	Publix 1479	North Myrtle Beach	SC	29582	(843) 272-0050
BAWI HRIN, Siang Za Sui	Parris Island	Parris Island	SC	29905	(843) 228-2383
SOE, Kel Blu	Publix 1478	Pawleys Island	SC	29585	(843) 235-3755
THANG, Nang Mun Lian	Publix 1482	Rock Hill	SC	29732	(803) 372-6364
PIANG, Cin En	Harris Teeter 149	Rock Hill	SC	29732	(803) 329-6220
THAWN, Cin	Publix 1485	Rock Hill	SC	29732	(803) 366-7500
KHAM, Thawng San	Publix 1671	Seneca	SC	29678	(864) 885-7055
BIK, Van	Shaw Air Force Base	Shaw AFB (Columbia)	SC	29152-5033	(803) 895-1294
THANG, Biak Hu	Publix 1608	Simpsonville	SC	29680	(864) 962-1030
PUI, Than Sang	Publix 035	Simpsonville	SC	29681	(864) 234-3860
KIM, Morris Lalruat	Publix 1717	Simpsonville	SC	29680	(864) 962-1183
LIAN, Lal Din	Publix 687	Spartanburg	SC	29307	(864) 253-1820
BIAKKOONG , Tony Ralcungthang	Publix 1266	Summerville	SC	29486	(843) 761-3750
SUON, Kunthea	Publix 1866	Summerville	SC	29486	(863) 688-1188
GACSADY, Jeremy Jacob	Publix 483	Summerville	SC	29485	(843) 832-0456
MEN, Hrang Thuai	Publix 1120	Summerville	SC	29483	(843) 832-4017
THANG, Ngin Kim	Harris Teeter 368	Summerville	SC	29486	(843) 974-9474
LUNG, Hai	Publix 2038	SUMMERVILLE	SC	29486	
KIP, Thang	Harris Teeter 363	Summerville	SC	29485	(843) 875-2524
KUNG, Hniang	Harris Teeter 355	Summerville	SC	29485	(843) 486-0578
PAR, Lung Hnem	Publix 632	Taylors	SC	29687	(864) 609-7300
DAH, Eh	Ellsworth AFB	Ellsworth AFB	SD	57706	(605) 385-5056
YI, Cho	Safeway 581	Rapid City	SD	57701	(605) 348-5125
MAUNG, Than	Safeway 1554	Rapid City	SD	57701	(605) 342-8455
LIANPI, Dominic	Safeway 583	Spearfish	SD	57783	(605) 642-5728
MAWI, Van	Publix 1360	Fairview	TN	37062-9048	(615) 799-3474
LAUNGXSAH, Aung Lian Thang	Publix 1235	Antioch	TN	37013	(615) 501-8250
KHUP, Khen Tual	Publix 142	Brentwood	TN	37027	(615) 221-9880
SIAMMUNG, Peter Kham	Publix 1021	Brentwood	TN	37027	(615) 507-1505
MARY, Cingsiandim	Publix 1057	Brentwood	TN	37027	(615) 941-8871
HUAI, Cing	Brooks Grocery 3	Chapel Hill	TN	37034	(931) 364-7315
NGA, Laawng	Publix 1731	Chattanooga	TN	37409	(423) 668-5233
NEM, Man San	Publix 1621	Chattanooga	TN	37421	(423) 855-1376
HIMA, Chan	Publix 1165	Chattanooga	TN	37421	(423) 296-1907
NUAM, Hau Ngaih	Publix 1460	Chattanooga	TN	37405	(423) 755-7901
HMUNG, Tin Za	Publix 1802	Clarksville	TN	37040	(931) 553-5067
THLUAI, Marry	Publix 1392	Clarksville	TN	37043-4990	(931) 551-7031
SI, Si	Publix 1648	Clarksville	TN	37043	(931) 358-2257
THANG, Van Za	Publix 1425	Clarksville	TN	37042	(931) 503-2551
WIN, Naing	Publix 1356	Cleveland	TN	37312	(423) 476-4022
NAING, Myo	Publix 1634	Cookeville	TN	38501	(931) 526-8830
PIANG, Dal Sawm	Publix 2106	Farragut	TN	37934	
SIAN ZA PAU, Cin	Publix 160	Franklin	TN	37069	(615) 599-1825
THANG, Dong Min	Publix 1529	Franklin	TN	37064	(615) 595-2021
TUANG, Thang Lian	Publix 1031	Franklin	TN	37067	(615) 591-4061
TUN, Aung	Publix 176	Franklin	TN	37064	(615) 591-3285
THANG, Helen Par Sin Eng	Publix 1033	Gallatin	TN	37066	(615) 451-6285
KHAI, Zam	Publix 1780	Gallatin	TN	37066	(615) 230-7647
DIM, Ciin Go	Publix 1739	Gallatin	TN	37066	(619) 989-9989
UK, Sum Lian	Publix 1141	Goodlettsville	TN	37072	(615) 851-7180
LAL, Thang Khaw	Publix 1543	Greeneville	TN	37745	(423) 636-1478
THANG, Helen Par Sin Eng	Publix 119	Hendersonville	TN	37075	(615) 264-2396
PHAIPI, Vial DoLian	Publix 182	Hermitage	TN	37076	(615) 874-0898
PAU, Thang Sut	Publix 1166	Hixson	TN	37343	(423) 847-8461
KHUP, Pau Khan	Publix 1633	Johnson City	TN	37604	(520) 321-1212
NINGNYE, Esther Ja Seng Bu	Publix 1415	Knoxville	TN	37934	(865) 675-3018
THAWN, Khup	Publix 1416	Knoxville	TN	37922	(865) 470-0720
KYAW AYE, Kyaw	Publix 1418	Knoxville	TN	37919	(865) 522-6313
THANG, Mang Suan	Publix 1175	Lebanon	TN	37087	(615) 444-2581
TAI, Tony	Publix 1801	Lebanon	TN	37090	(615) 443-4349
PAR, Dawt Chin	Publix 1779	MARYVILLE	TN	37801-2310	(800) 242-1227

Zenshi Food Service Counters
Franchise List
As of March 31, 2026

HAN, Tun Tun	Publix 1268	Mount Juliet	TN	37122	(615) 773-0250
LINN, Zaw	Publix 1220	Mt. Juliet	TN	37122	(615) 758-4200
THANG, Mung Vum	Publix 1778	MURFREESBORO	TN	37128-4377	(800) 242-1227
KHUAL, Cing Sannuam	Publix 1164	Murfreesboro	TN	37129	(615) 849-3669
MANG, Go Ngaih	Publix 1172	Murfreesboro	TN	37128	(615) 494-3196
HTUNT, Ohn Y.	Publix 1234	Murfreesboro	TN	37128	(615) 895-7096
ENG, Suan	Publix 1163	Murfreesboro	TN	37130-5957	(615) 849-4290
DABAW, Mai Ra	Publix 1133	Nashville	TN	37221-4212	(615) 673-2347
KHUPPAU, Emmanuel Lian	Publix 1116	Nashville	TN	37211-7329	(615) 331-4912
TAANG, Tun Suan	Publix 1298	Nashville	TN	37209	(615) 352-1055
LAL, Mang Sian	Publix 1680	Nashville	TN	37203	(615) 259-6072
MANG, Pum Khan	Publix 123	Nashville	TN	37221	(615) 646-1870
THUAN, Aung	Publix 1426	Nashville	TN	37214	(615) 884-2665
POU, Lian Kam Nang D.	Publix 1665	Nashville	TN	37204	(615) 279-9470
HAN, Tun Tun	Publix 1211	Nashville	TN	37205	(615) 279-2038
MANG, Khai Lian	Publix 1732	Nashville-Davidson	TN	37206	(615) 226-7100
LIAN, Kham Zam	Publix 2009	Nolensville	TN	37135	
LING, Cung Ceu	Publix 1863	OOLTEWAH	TN	37363	(800) 242-1227
HIMA, Chan	Publix 1244	Ooltewah	TN	37363	(423) 238-1032
MUANG, Michael Thual Sian	Publix 1515	Pigeon Forge	TN	37863	(865) 774-2032
LIAN, Vung	Publix 1713	Sevierville	TN	37876	(865) 429-1734
CING, Nian Lam	Publix 1238	Smyrna	TN	37167	(615) 223-9101
SUAN, Tual Khan	Publix 1016	Smyrna	TN	37167	(615) 220-1919
CHARERNNAM, Tony Kee	Publix 2036	Spring Hill	TN	37174	(615) 302-4068
MANG, Nang Lam	Publix 1047	Spring Hill	TN	37174	(615) 302-4068
KHAI, Thang Sian	Publix 1613	Tullahoma-Coffee	TN	37388	(931) 455-6032
THLUAI, Siang Nei	Publix 2020	WHITE HOUSE	TN	37188	(863) 688-1188
LIAN, Adam Van	United Market 545	Abilene	TX	79601	(325) 677-8527
LIAN, Adam Van	United Market 548	Abilene	TX	79605	(325) 698-9391
BAWI, Van Dawtpeng	United Market Place 679	Abilene	TX	79606	(325) 695-5300
DIM, Bawi Hoi	Tom Thumb 2643	Addison	TX	75001	(972) 241-4532
XU, Demin	United 563 Market Street	Allen	TX	75013	(972) 908-3830
MI, Nai S.	United 530	Amarillo	TX	79119	(806) 467-6800
HLEI, Thawng	United 526 Market Street	Amarillo	TX	79101	(806) 468-6000
MANG, Uk Lian	United Market Street 688	AMARILLO	TX	79119	(806) 468-2780
PUI, Lal Muan	United 523	Amarillo	TX	79106	(806) 353-6464
HTWE, Than	United Market 529	Amarillo	TX	79109	(806) 353-9700
SIAM, NANG SIAN	Tom Thumb 3617	Arlington	TX	76013	(817) 462-0151
DOI, Far	Tom Thumb 3658	Arlington	TX	76006	(817) 276-5360
PAN, Mary Htoi Seng	Oracle	Austin	TX	78741	(737) 867-1000
HTOO, Aung Aung	Randalls 1850	Austin	TX	78745	(512) 282-5720
HTOO, Aung Aung	Randalls 2471	Austin	TX	78703	(512) 477-7196
HTOO, Aung Aung	Randalls 2477	Austin	TX	78746	(512) 329-7400
LIAN, Van	Randalls 2987	Austin	TX	78732	(512) 266-3168
SUNG, Zung	Albertson's 4290	Azle	TX	76020	(817) 270-1116
MUU, Joseph	United 532	Canyon	TX	79015	(806) 655-2300
LIAN, Van Hmun	Tom Thumb 2590	Carrollton	TX	75007	(972) 394-4127
HOM, Nang San	Randalls 1896	Cedar Park	TX	78613	(512) 506-9118
SANG, Sui	United 560 Market Street	Colleyville	TX	76034	(817) 577-5020
THANG, SUI	Tom Thumb 70	Colleyville	TX	76034	(817) 354-0505
PENG, Van Tha	Tom Thumb 1781	Coppell	TX	75019	(972) 304-3223
THANG, Bawi Lian	United 564 Market Street	Coppell	TX	75019	(469) 322-6800
HEI, Nawn	Albertson's 4191	Corinth	TX	76210	(940) 321-4358
THAI, Cer	Tom Thumb 2534	Dallas	TX	75214	(214) 824-1265
THAI, Cer	Tom Thumb 3522	Dallas	TX	75230	(214) 363-7685
LIAN, Za	Tom Thumb 3569	Dallas	TX	75219	(972) 560-0233
PAR, Sui Tin	Tom Thumb 3650	Dallas	TX	75254	(972) 789-6950
UK, Van Lian	Tom Thumb 3614	Dallas	TX	75208	(214) 331-0160
KAI, Siang Hlei	Tom Thumb 2642	Dallas	TX	75206	(214) 750-3200
SUNG, Bawi Tha Chin	Tom Thumb 4105	Dallas	TX	75287	(972) 732-6291
HNEM, Ngun Tawk	Tom Thumb 1540	Dallas	TX	75244	(972) 241-4426
SHWE, Paul Kyaw	Tom Thumb 2503	Dallas	TX	75225	(214) 368-8636
SHWE, Paul Kyaw	Tom Thumb 3608	Dallas	TX	75225	(214) 346-1020
CEU, Siang Uk	Tom Thumb 2990	Dallas	TX	75209	(214) 352-1781
SHI, Li	Tom Thumb 2544	Dallas	TX	75231	(214) 369-9694
SHI, Li	Tom Thumb 3560	Dallas	TX	75243	(214) 340-1266
LIAN, Sung Zi	Tom Thumb 3582	Dallas	TX	75252	(972) 985-2240
KHAM, Simon	Albertson's 4289	Dallas	TX	75218	(214) 319-7919
KHAM, Simon	Tom Thumb 3570	Dallas	TX	75214	(972) 201-2500
SAZUL, Siang Cinlian	Albertson's 716	Denison	TX	75020	(903) 463-6076
N'HPANG, Mung Awng	Albertson's 4152	Denton	TX	76201	(940) 383-2391
LWIN, Maung Maung	Dyess AFB	Dyess AFB	TX	79607	(325) 696-4802
WIN, Tun	Albertson's 3932	El Paso	TX	79912	(915) 584-9460
SAZUL, Myo Aung	Albertson's 2994	El Paso	TX	79912	(915) 845-5069
THANG, Henry Zalian	Albertson's 1936	El Paso	TX	79902	(915) 351-1002
LIAN, Van Peng	Albertson's 3999	El Paso	TX	79924	(915) 821-2006
NI, Van	Albertson's 934	EL Paso	TX	79925	(915) 591-9477
THAWNG, Lian Bik	Albertson's 3249	El Paso	TX	79938	(915) 995-3595
MAYIT, Dauhkawng	Fort Bliss	El Paso	TX	79906	(915) 568-6688
SANG, Lal Lian	Albertsons 1006	El Paso	TX	79912	(915) 778-8996
THANG, Biak Ceu	Albertson's 2016	El Paso	TX	79936	(915) 855-9761
NI CER CIN, Esther	Tom Thumb 3575	Flower Mound	TX	75028	(972) 539-2366
CAAN, Sui	Tom Thumb 1854	Flower Mound	TX	75028	(972) 691-2084
LIAN, Thla	United 565 Market Street	Flower Mound	TX	75028	(972) 355-4007
HLAWNG CEU, Siang Tin Thai	Fort Hood Clear Creek	Fort Cavazos	TX	76544	(254) 287-6648
KHAI, Emmanuel Hau	Fort Hood Warrior Way	Fort Hood	TX	76544	(254) 287-8025
ENG, Sui	Fort Sam Houston	Fort Sam Houston	TX	78234	(210) 221-4678
SUNG, Nomi Biak Nawn	Albertson's 4150	Fort Worth	TX	76135	(817) 237-8124
SIAM, NANG SIAN	Albertson's 4272	Fort Worth	TX	76112	(817) 451-0306

Zenshi Food Service Counters
Franchise List
As of March 31, 2026

RAM, Zi	Albertson 4124	Fort Worth	TX	76132	(817) 423-9569
SUNG, Kil Hnem	Albertson's 4223	Fort Worth	TX	76108	(817) 246-3366
SUNG, Zung	Albertsons 4151	Fort Worth	TX	76137	(817) 232-2180
LIAN, Than	Tom Thumb 2574	Fort Worth	TX	76109	(817) 570-2950
PENG, Van Tha	Tom Thumb 2963	Frisco	TX	75036	(214) 494-6213
ZI, Amy Siang	United 562 Market Street	Frisco	TX	75033	(214) 872-1500
CHIN, Zerobe Dawt Sung	Tom Thumb 11	Frisco	TX	75035	(972) 377-1800
HESA, Esther	United 685 Market Street	Frisco	TX	75034	(214) 705-0310
LIAN, Sung Zi	Tom Thumb 2581	Frisco	TX	75034	(972) 377-1800
CEM, Dawt	Tom Thumb 1783	Garland	TX	76044	(972) 495-9807
NAWT, Pa	Tom Thumb 2578	Garland	TX	75040	(972) 675-8661
HKAWNG, Visit R Dau	Randalls 2484	Georgetown	TX	78633	(512) 942-6028
CIAKIP, Tluang Hnin	Goodfellow AFB	Goodfellow AFB	TX	76908	(325) 653-2441
TUN, Men	Tom Thumb 1786	Grand Prarie	TX	75052	(972) 266-7050
THANG, Henry	Tom Thumb 3625	Grapevine	TX	76051	(817) 481-5669
THANG, Vanlian	Albertsons 30	Horizon City	TX	79928	(208) 395-6200
HAN, Soe C.	Randalls 3067	Houston	TX	77056	(713) 964-3150
LAYMAY, Peter	Randalls 1061	Houston	TX	77025	(713) 349-2150
AUNG, Nan Thiri	Randalls 2961	Houston	TX	77063	(713) 782-0982
KHAI, Hau Cin	Randalls 1773	Houston	TX	77002	(713) 331-1042
KHAI, Hau Cin	Chevron	Houston	TX	77002	
LASHI, Lum Awng	Randalls 1011	Houston	TX	77079	(281) 497-0630
LASHI, Lum Awng	Randalls 1066	Houston	TX	77024	(713) 365-6700
LASHI, Lum Awng	Randalls 4033	Houston	TX	77005	(713) 668-4778
SIAM, NANG SIAN	Tom Thumb 2609	Hurst	TX	76054	(817) 428-0383
THANG, Henry	Albertson's 36	Irving	TX	75060	(972) 374-5100
VAN, Solomon	Tom Thumb 3621	Irving	TX	75038	(972) 717-9727
CING SEN, Mary	Randalls 2671	Katy	TX	77450	(281) 579-3890
SHWE, Khin Mar	Lackland AFB	Lackland AFB	TX	78236-1039	(210) 671-2837
LIAN, Van	Randalls 1779	Lakeway	TX	78734	(512) 263-6420
HOM, Nang San	Randalls 3145	Leander	TX	78641	(737) 843-3073
WIN, Nwe	United 502 Market Street	Lubbock	TX	79413	(806) 795-8341
ZEYA, Kyaw	United Market 505	Lubbock	TX	79416	(806) 796-0330
TIAL, Cer Chin	United Market 657	Lubbock	TX	79424	(806) 705-4100
KAP, Khai Za	United 551	Lubbock	TX	79424	(806) 783-0206
THUI, Prescilla	United 553 Market Street	Lubbock	TX	79407	(806) 788-2000
TAWNG, Ngun Za	United 696 Market Street	Mansfield	TX	76063	(817) 453-6000
MAI, Seng	Tom Thumb 1972	Mansfield	TX	76063	(817) 453-6770
CUNG, Graham	United 561 Market Street	McKinney	TX	75070	(972) 548-5140
LALRAM, MAWI	United Market 671	Midland	TX	79707	(432) 689-8683
THANG, Henry	United Market Place 674	Midland	TX	79705	(432) 699-0761
BAU, Zyon	Harvest Market	N Montgomery	TX	77316	(866) 945-1108
AYE, Khin May	Corpus Christi NAS	NAS CORPUS CHRISTI	TX	78419-5104	(361) 961-2545
NBAN PA, Ja Mai Lu	Fort Worth Naval Air Station	Naval AirStation/JRB	TX	76127	(817) 782-3664
THANG, Thawng	United Market 675	Odessa	TX	79762	(432) 367-4976
HLEI, Van Tha	United Market 663	Pecos	TX	79772	(432) 755-3150
SHI, Li	Tom Thumb 2595	Plano	TX	75023	(972) 491-2200
LIAN, Sung Zi	Tom Thumb 2554	Plano	TX	75075	(972) 596-4420
LIAN, Sung Zi	Tom Thumb 2570	Plano	TX	75093	(972) 473-3300
THANG, Cung Lian	United 566 Market Street	Plano	TX	75093	(972) 713-5500
BOR, Iang	Randolph AFB	Randolph AFB	TX	78150	(210) 652-5102
GONZALES, Juan	Tom Thumb 3637	Richardson	TX	75080	(972) 680-6010
CEM, Dawt	Tom Thumb 3641	Richardson	TX	75080	(972) 470-1360
CING SEN, Mary	Randalls 2670	Richmond	TX	77469	(281) 238-8231
Par, Bawi Hnem	Tom Thumb 2964	Rockwall	TX	75087	(972) 961-9330
HOM, Nang San	Randalls 2636	Round Rock	TX	78664	(512) 246-0390
NAWT, Pa	Tom Thumb 1925	Rowlett	TX	75089	(214) 607-0218
SUNG, Zung	Safeway 4102	Saginaw	TX	76179	(817) 232-2777
PAR, San Zaa	United Market Street 678	San Angelo	TX	76904	(325) 942-6627
LIAN, Van Hmun	Sheppard AFB	Sheppard AFB	TX	76311	(940) 676-2511
SAZUL, Siang Cinlian	Safeway 226	Sherman	TX	75090	(903) 868-9686
THANG, Henry	Tom Thumb 2580	Southlake	TX	76092	(817) 416-5464
GUALNAM, Tuang Donggel	Samsung 2	Taylor	TX	76574	
TIAL, Ni Hniang	Tom Thumb 1789	Trophy Club	TX	76262	(817) 490-6960
MANG, Ngun Lian	United 517 Market Street	Wichita Falls	TX	76309	(940) 691-1471
NUNG, Van Cung	United Supermarket 634	Wichita Falls	TX	76308	(806) 791-8113
HLEI, Zing	Tom Thumb 4239	Wylie	TX	75098	(972) 429-7840
SAN, Ngun Lin	Ridley's 1165	Eagle Mountain	UT	84005	(801) 756-8383
THANG, Ram Ceu	Hill AFB	Hill AFB	UT	84056-5704	(801) 777-2300
MOE, Willy	Albertson's 1329	Saint George	UT	84770	(435) 688-7156
MOE, Willy	Albertson's 301	Washington	UT	84780	(435) 628-0424
HRANLEH, Chawia	Harris Teeter 238	Aldie	VA	20105	(703) 542-8340
LEI, LUBANG	Harris Teeter 413	Alexandria	VA	22302	(571) 895-2820
SOE, William	Harris Teeter 398	Alexandria	VA	22314	(703) 419-3837
LAL, Hmun	Harris Teeter 133	Alexandria	VA	22304	(703) 461-7082
WIN, Pyae Sone	Harris Teeter 23	Arlington	VA	22207	(703) 532-8663
Wai, Thidar	Harris Teeter 83	Arlington	VA	22202	(703) 413-7112
KO, Myo Ko	Harris Teeter 235	Arlington	VA	22206	(703) 379-2003
Aung, Wai Wai	Harris Teeter 284	Ashburn	VA	20148	(703) 723-0842
Aung, Wai Wai	Harris Teeter 310	Ashburn	VA	20147	(571) 223-2245
HTIKE, Tin	Harris Teeter 230	Ashburn	VA	20148	(703) 542-8300
LAM, Maung	Harris Teeter 242	Ashburn	VA	20147	(571) 223-0110
THANTSIN, Koko	Harris Teeter 313	Bristow	VA	20136	(703) 257-1367
SU, Myat The	Publix 2025	CARROLLTON	VA	23314	(800) 242-1227
OO, Aung Myo	Harris Teeter 309	Chantilly	VA	20152	(703) 722-2126
ZAMI, Eng	HOPS	Chantilly	VA	20151	(571) 649-4070
LAHTAW, Seng Bu	Harris Teeter 177	Charlottesville	VA	22903	(434) 984-2900
KING, Kawng	Harris Teeter 132	Charlottesville	VA	22911	(434) 872-0010
BUBAN, Bernadette	Harris Teeter 332	Charlottesville	VA	22903	(434) 823-1184

Zenshi Food Service Counters
Franchise List
As of March 31, 2026

KYAW, Shwe	Harris Teeter 465	Chesapeake	VA	23320	(757) 217-0376
LIU, Rui	Harris Teeter 176	Chesapeake	VA	23320	(757) 382-7300
MIN, Myo Min	Publix 2032	CHESAPEAKE	VA	23322-7197	(757) 550-6044
GUTIERREZ, Jhonna Nadonza	Harris Teeter 51	Chesapeake	VA	23322	(757) 546-9074
HTUT, Zaw	Publix 1643	Chesterfield	VA	23832	(804) 639-6525
KYAW, James M	Publix 1594	Colonial Heights	VA	23834	(804) 520-4520
THAWNG, Lian Biak	Harris Teeter 253	Fairfax	VA	22033	(703) 877-0580
OO, Aung Myo	Harris Teeter 307	Falls Church	VA	22046	(571) 419-6869
HAN, Pyae Phyo	Harris Teeter 279	Falls Church	VA	22041	(703) 256-6615
KYAW, James M	Fort Belvior	Fort Belvoir	VA	22060	(703) 806-6371
NGATZU, Ahphong	Fort Eustis	Fort Eustis	VA	23604	(757) 878-5608
Aung, Sai Win	Fort Lee	Fort Lee	VA	23801	(804) 765-1483
TUN, Han Win	Fort Myer	Fort Myer	VA	22211	(703) 696-3674
THET, Yamin	Publix 1885	FREDERICKSBURG	VA	22407-6232	(540) 736-6013
THAN, Myo Min Min	Publix 1632	Fredericksburg	VA	22407	(540) 898-6801
PAN, Meiling	Harris Teeter 338	Gainesville	VA	20155	(703) 754-7736
KYAW, James M	Publix 1566	Glen Allen	VA	23059	(804) 527-5334
SEIN, Oo Khin	Publix 1595	Glen Allen	VA	23060	(804) 965-6303
TUN, Nilar	Publix 1589	Glen Allen	VA	23060	(804) 755-2360
TUN, Nilar	Publix 1591	Glen Allen	VA	23059	(804) 262-8190
MIN, Wisely	Harris Teeter 460	Hampton	VA	23669	(757) 580-0156
KYAW, James M	Publix 1587	Henrico	VA	23233	(804) 364-6314
KYAW, James M	Publix 1590	Henrico	VA	23233	(804) 360-4920
ZIN, Kyaw	Harris Teeter 85	Herndon	VA	20171	(703) 464-7934
HTAY, Kyaw	Langley AFB	Langley AFB	VA	23665	(757) 764-7604
CHAN, Thwin Aye	Harris Teeter 100	Lansdowne	VA	20176	(571) 333-2495
OO, Wai Yan	Harris Teeter 316	Manassas	VA	20110	(703) 580-0251
MYINT, Thet Htar	Harris Teeter 303	Manassas	VA	20110	(703) 257-4685
LIAN, Paul	Publix 1626	Mechanicsville	VA	23111	(804) 569-3902
HTUT, Zaw	Publix 1592	Midlothian	VA	23112	(804) 739-1160
HANA, Marvat Mbrook Adim	Publix 1694	Midlothian	VA	23114	(804) 378-3222
SAN, Maung Maung	Harris Teeter 6	Newport News	VA	23606	(757) 595-6000
AUNG, Han Win	Harris Teeter 378	Norfolk	VA	23517	(757) 533-9284
KYAW, Khin	Norfolk Naval Station Commissary	Norfolk	VA	23511	(757) 423-3188
SANG, Ro	Harris Teeter 407	Norfolk	VA	23505	(757) 558-4145
JON, Simon Bar	Harris Teeter 461	Norfolk	VA	23503	(757) 587-0200
HANA, Marvat Mbrook Adim	Publix 1679	North Chesterfield	VA	23235	(804) 799-6465
GUTIERREZ, Jhonna Nadonza	Portsmouth NNSY	Portsmouth	VA	23709	(757) 399-7941
HTWE, Tin Moe	Harris Teeter 315	Portsmouth	VA	23703	(757) 483-9235
TUALLAWT, Malsawm Sanga	Harris Teeter 388	Purcellville	VA	20132	(540) 338-8995
KYAW, James M	Quantico	Quantico MCCB	VA	22134	(703) 784-2476
GREGOIRE, Sunyang Kim	Harris Teeter 81	Reston	VA	20190	(703) 435-5800
KYAW, James M	Publix 1588	Richmond	VA	23221	(804) 253-6372
OO, Sandar Cho	Publix 1636	Richmond	VA	23225	(804) 323-4110
ARGUETA DIAZ, Darlin Noel	Publix 1593	Richmond	VA	23226	(804) 288-1070
LAHTAW, Htang Ra	Publix 1596	Richmond	VA	23231	(804) 226-1915
KYAW, James M	Publix 1720	Stafford	VA	22554	(540) 288-9280
NAING, Kaung Htat	Harris Teeter 326	Sterling	VA	20164	(571) 526-4835
MIN, Myo Myin	Publix 1883	SUFFOLK	VA	23434-8694	(757) 942-6032
HTWE, Thet Maung	Harris Teeter 463	Sufford	VA	23435	(757) 947-0230
TUN, Nyi Nyi	NAS Oceana	Virginia Beach	VA	23454	(757) 428-6401
AYE, Thida	Harris Teeter 459	Virginia Beach	VA	23454	(757) 481-6254
MIN, Wisely	Harris Teeter 369	Virginia Beach	VA	23462	(757) 467-4387
WIN, Ye	Harris Teeter 181	Virginia Beach	VA	23451	(757) 422-4595
THIRI, Thinn	Publix 2030	VIRGINIA BEACH	VA	23454	(800) 242-1227
TUN, Wai Lin	Little Creek Commissary	Virginia Beach	VA	23459	(757) 464-3561
REYES, Geraldine Garcia	Harris Teeter 464	Virginia Beach	VA	23455	(757) 217-0240
Malum Khawngteng, Elijah	Harris Teeter 161	Virginia Beach	VA	23452	(757) 631-6750
LWIN, Aung Toe	Harris Teeter 239	Virginia Beach	VA	23456	(757) 563-9410
HTWE, Tin Moe	Harris Teeter 350	Virginia Beach	VA	23464	(757) 467-0529
KYAW, Shwe	Harris Teeter 419	Virigina Beach	VA	23456	(757) 721-2396
KO, Tin Ko	Harris Teeter 329	Warrenton	VA	20186	(540) 349-9500
LOME, Shan	Harris Teeter 320	Williamsburg	VA	23185	(757) 253-0182
LOME, Shan	Harris Teeter 462	Williamsburg	VA	23185	(757) 941-1680
SAN, Aye Cherry	Harris Teeter 356	Williamsburg	VA	23188	(757) 903-4350
SAN, Aye Sabal	Publix 1635	Williamsburg-James	VA	23188	(757) 564-5902
TUN, San Shwe	Shaw's 616	Berlin	VT	05602	(802) 223-2652
OO, Min Hlaing	Shaw's 117	Burlington	VT	05403	(802) 860-2255
GYI, Ko	Shaw's 615	Colchester	VT	05446	(802) 654-7803
GYI, Maung San Tha	Shaw's 530	Manchester Center	VT	05255	(802) 362-4447
TUN, San Shwe	Shaw's 121	Montpelier	VT	05602	(822) 237-7587
GYI, Ko	Shaw's 2518	Williston	VT	05495	(802) 878-9770
LIN, Thet Naing	Safeway 1546	Aberdeen	WA	98520	(360) 533-1955
MAWI, Elizabeth Sui	Safeway 593	Anacortes	WA	98221	(360) 293-5393
HTWE, Khine M	Safeway 534	Arlington	WA	98223	(360) 653-4144
HTWE, Khine M	Safeway 1522	Arlington	WA	98223	(360) 435-3636
ING, Seng	Safeway 531	Auburn	WA	98002	(253) 804-0138
KO, Lwin Ko	Safeway 1252	Bainbridge Island	WA	98110	(206) 842-7197
LABANG, Dee Sar	Safeway 490	Bellevue	WA	98005	(425) 373-5263
MOE, Khin Soe	Safeway 1600	Bellevue	WA	98004	(425) 455-6500
LIAN, Thein	Safeway 3285	Bellingham	WA	98226	(360) 647-8311
MI, No	Safeway 1864	Bothell	WA	98021	(425) 482-2767
AUNG, Htin	Safeway 535	Bothell	WA	98012	(425) 483-1060
YOUN, Eun Kyeong	Bremerton NS	Bremerton	WA	98314-5205	(360) 405-1971
Tun, Ye	Safeway 1524	Bremerton	WA	98311	(360) 373-8911
LIVINGSTON, Po Sun	Safeway 1467	Bremerton	WA	98312	(360) 792-9149
UK, James Hrang Tin	Safeway 1664	Burien	WA	98166	(206) 243-3043
ZINGHANG, Sam Nang	Safeway 1287	Camas	WA	98607	(360) 834-7933
NAING, Win	Safeway 1495	Centralia	WA	98531	(360) 330-0884

Zenshi Food Service Counters
Franchise List
As of March 31, 2026

SAW, Thiha	Safeway 1740	Cheney	WA	99004	(509) 235-6400
Ying, Lut	Safeway 241	Clarkston	WA	99403	(509) 758-5523
MAUNG, Kyaw Win	Safeway 1135	Cle Elum	WA	98922	(509) 674-2580
THANG, Thla Tin	Safeway 792	Covington	WA	98042	(253) 630-0063
VAN, Thao T	Safeway 1572	DUVALL	WA	98019	(425) 844-1188
LIAN, Ral Bawi	Safeway 1297	Edmonds	WA	98026	(425) 778-1411
MAUNG, Kyaw Win	Safeway 1630	Ellensburg	WA	98926	(509) 925-2700
HUAI, Zam Tian	Safeway 494	Enumclaw	WA	98022	(360) 825-5023
LING , Tial Hmung	Safeway 1544	Ephrata	WA	98823	(509) 754-4441
SAVIO, Khun	Safeway 1484	Everett	WA	98203	(425) 258-3552
OCHOA, Khu	Providence Regional Medical Center (Everett)	Everett	WA	98201	(425) 261-2000
LA, Mung Khawng	Safeway 503	Everett	WA	98208	(425) 337-0886
LA, Mung Khawng	Safeway 2645	Everett	WA	98208	(425) 332-6175
HAU, Khup Khan	Fairchild AFB	Fairchild AFB	WA	99011	(509) 244-5591
THANG, Lal Ruat	Safeway 1555	Federal Way	WA	98003	(253) 839-8503
KIM, Grace	Fort Lewis	Fort Lewis	WA	98433	(253) 966-8456
KIM, Hyon Tae	Safeway 3321	Gig Harbor	WA	98335	(253) 853-1950
JUN, Eun Kyung	Safeway 4406	Gig Harbor	WA	98332	(253) 858-4750
GUMRING, Mayzida	Safeway 547	Graham	WA	98338	(253) 847-7050
KHAI, Lian Thawn	Safeway 4405	Hazel Dell	WA	98665	(360) 574-1141
ZUAL, Dong	Safeway 3006	Issaquah	WA	98029	(425) 369-3113
ZAU, Thang	Safeway 1624	Issaquah	WA	98027	(425) 392-0410
MI, No	Safeway 3500	Kenmore	WA	98025	(425) 487-2001
NYO, Mu	Safeway 3253	Kennewick	WA	99336	(509) 783-1457
UK, Francis Cung Biak	Safeway 1294	Kent	WA	98032	(253) 852-4454
TIAL, Fam Men	Safeway 459	Kent	WA	98031	(253) 854-2814
THIN, Thin	Safeway 1966	Kent	WA	98030	(253) 638-7275
KI, Ngun Tha	Safeway 186	Kingston	WA	98346	(360) 297-1800
THIN, Atae	Safeway 526	Kirkland	WA	98034	(425) 821-2112
THIN, Atae	Safeway 2734	Kirkland	WA	98034	(425) 821-9224
HRILA, Lal Nun	Safeway 543	Lacey	WA	98503	(360) 438-0203
DIM, Ngun Lian	Safeway 1173	Lacey	WA	98516	(360) 438-3914
AUNG, Htin	Safeway 3416	Lake Forest	WA	98155	(206) 363-5397
HTWE, Htet Nandar	Safeway 1803	Lake Stevens	WA	98258	(425) 249-4000
NUAM, Mang	Safeway 3411	Lakewood	WA	98498	(253) 582-5844
SUNG, Nei	Safeway 1645	Lakewood	WA	98499	(253) 581-2072
AUNG, Pyae Sone	Safeway 1589	Leavenworth	WA	98826	(509) 548-5435
MANG, Za Lun	Albertson's 2248	Liberty Lake	WA	99019	(509) 924-2374
WEDEKIND, MAO	Safeway 1930	Lynden	WA	98264	(360) 318-0688
LUNG, Seng	Safeway 469	Lynnwood	WA	98087	(425) 347-3060
NUAM, Mang	Safeway 1471	Maple Valley	WA	98038	(425) 432-2020
SAVIO, Khun	Smokey Point Commissary	Marysville	WA	98271-7853	(425) 304-3411
HTWE, Khine M	Safeway 1485	Marysville	WA	98270	(360) 658-8483
SHEIN, Kyi Tha	McChord AFB	McChord AFB	WA	98438	(253) 982-3285
CUNG, Tuan Ceu	Safeway 3545	Milton	WA	98354	(253) 927-2332
MOHAMAD ALI, Mohamad Elias Bin	Safeway 537	Monroe	WA	98272	(360) 794-9292
LING , Tial Hmung	Safeway 3252	Moses Lake	WA	98837	(509) 765-3961
MAWI, Elizabeth Sui	Safeway 1472	Mount Vernon	WA	98273	(360) 424-8160
LIAN, Ral Bawi	Albertson's 414	Mountlake Terrace	WA	98043	(425) 775-4154
OO, Bo Thaun	Bangor NSB	NBK-BANGOR	WA	98315	(360) 396-6025
THANG, Par Tin Dim	Safeway 558	Newcastle	WA	98059	(425) 641-0902
HTOO, Naw Mular Htoo	Safeway 1528	North Bend	WA	98045	(425) 831-2122
AUNG, Thawng	Safeway 3275	NORTH SEATTLE	WA	98109	(206) 282-8090
CIN, Khan	Whidbey Island NAS	Oak Harbor	WA	98278	(360) 257-3318
THEINKANG, Zamishar	Safeway 402	Oak Harbor	WA	98277	(360) 279-8828
MIN, Kyaw Sein	Safeway 1952	Olympia	WA	98516	(360) 456-7132
MENG, Britney Par Ci	Safeway 1464	Olympia	WA	98502	(360) 956-3782
HMUNG, Siang L	Safeway 1844	Orting	WA	98360	(360) 893-0840
SOE, Myo Hein	Safeway 228	Pasco	WA	99301	(509) 547-8858
SANG, Ram Hnin	Safeway 1492	Port Angeles	WA	98362	(360) 457-0788
AUNG, Charles Gum San	Safeway 419	Port Orchard	WA	98367	(360) 874-8300
KI, Ngun Tha	Safeway 538	Port Townsends	WA	98368	(360) 385-2806
WATANABE, Iori	Safeway 3148	Poulsbo	WA	98370	(360) 394-0023
NAING, Zaw Lin	Safeway 2639	Pullman	WA	99163	(509) 334-0803
THANG, Thla	Safeway 2640	Puyallup	WA	98373	(253) 864-7277
GUMRING, Mayzida	Safeway 3228	Puyallup	WA	98375	(253) 414-1737
MOHAMAD ALI, Mohamad Elias Bin	Safeway 464	Redmond	WA	98052	(425) 885-3323
MOHAMAD ALI, Mohamad Elias Bin	Safeway 496	Redmond	WA	98052	(425) 869-7343
SUNGCCA BAWI, Ling Bawi	Safeway 519	Renton	WA	98058	(425) 228-1740
THANG, Ngun Thawng	Safeway 1563	Renton	WA	98057	(425) 255-4151
THANG, Ngun Thawng	Safeway 3319	Renton	WA	98059	425.226.7666
NYO, Mu	Safeway 252	Richland	WA	99352	(509) 627-5133
MARAN, Pius Tumai	Safeway 333	Richland	WA	99354	(509) 946-9605
LABANG, Dee Sar	Safeway 555	Sammamish	WA	98074	(425) 868-4000
PUII, Lal Nun	Safeway 1493	Seattle	WA	98188	(206) 244-2567
PEIK, Kyaw	Safeway 1551	Seattle	WA	98112	(206) 323-4988
PEIK, Kyaw	Safeway 2980	Seattle	WA	98105	(206) 522-4565
HNIN, Za Cung	Safeway 1586	Seattle	WA	98125	(206) 306-0504
NYO, Htay	Safeway 1993	Seattle	WA	98112	(206) 494-1518
SUAN, Mang Hau	Safeway 2932	Seattle	WA	98116	(206) 937-2272
SIAN, John Kham	Safeway 1062	Seattle	WA	98116	(206) 932-6026
SIAN, John Kham	Safeway 1923	Seattle	WA	98126	(206) 935-3996
VANG, Monica Hlawn	Safeway 1550	Seattle	WA	98115	(206) 525-6348
DAM, Helda Tha Sin Kim	Safeway 423	Seattle	WA	98115	(206) 524-7064
HNUNA, Lian	Safeway 1448	Sequim	WA	98382	(360) 681-2905
MIN, Kyaw Sein	Safeway 585	Shelton	WA	98584	(360) 426-9978
AUNG, Htin	Safeway 497	Shoreline	WA	98155	(206) 363-3130
Tun, Ye	Safeway 1680	Silverdale	WA	98383	(360) 692-4488
TUANG, Vum Lam	Safeway 258	Spokane	WA	99206	(509) 892-2112

Zenshi Food Service Counters
Franchise List
As of March 31, 2026

KHUAL, Peter Lian Khan	Safeway 1799	Spokane	WA	99207	(509) 484-5195
WINT, Kyaw Thu Zaw	Providence Sacred Heart Medical Center	Spokane	WA	99204	(509) 474-3131
WINT, Kyaw Thu Zaw	Safeway 1494	Spokane	WA	99205	(509) 327-4593
SAW, Thiha	Safeway 1473	Spokane	WA	99216	(509) 921-9859
PAING, Min Set	Safeway 1242	Spokane	WA	99223	(505) 532-0822
HTIKE, Khin Zayyar	Safeway 1299	Spokane	WA	99218	(509) 465-2576
HTIKE, Khin Zayyar	Safeway 3255	Spokane	WA	99202	(509) 482-1987
PAUPU, John	Safeway 206	Spokane	WA	99208	(509) 465-8110
HTET, Walar	Safeway 3248	Spokane	WA	99205	(509) 327-4880
KHINE, Zaw Myo	Albertson's 1268	Spokane	WA	99223	(509) 443-6403
MYINT, Htike Tan	Albertson's 265	Spokane	WA	99208	(509) 489-1250
NAING, Kee	Safeway 246	Spokane Valley	WA	99212	(509) 924-9014
HNIN, Bawi	Safeway 1978	Tacoma	WA	98407	(253) 759-9251
MAWI, Cer	Safeway 1437	Tacoma	WA	98418	(253) 471-1630
MEN, Ngun	Safeway 3424	Tacoma	WA	98406	(253) 752-5570
KO, Ni Ni	Safeway 486	Tacoma	WA	98466	(253) 565-6215
AN, Jin Man	Safeway 1503	Tumwater	WA	98501	(360) 943-1830
MAN LAL, Zen Lam	Safeway 1611	Vancouver	WA	98661	(360) 992-5680
PIANG, Nang Sian	Safeway 1842	Vancouver	WA	98686	(360) 566-7980
ZINGHANG, Sam Nang	Safeway 1704	VancouverVANCOUVER	WA	98682	(360) 944-2680
KIM, Morgan	Safeway 533	Woodinville	WA	98077	(425) 788-9150
MAUNG, Aung Lwin	Safeway 1762	Woodland	WA	98674	(360) 225-4370
THANG, Thawng Zam	Safeway 1619	Yelm	WA	98597	(360) 458-8830
LEE, Xiong	Fresh Madison Market 1	Madison	WI	53715	(608) 287-0000
MIN, Maung Naing	Albertson's 60	Casper	WY	82604	(307) 206-0136
LUNN, Nyo Chit	Safeway 62	Casper	WY	82609	(307) 237-9361
THIRINDA, FNU	Safeway 65	Cheyenne	WY	82001	(307) 635-1151
THIRINDA, FNU	Safeway 66	Cheyenne	WY	82009	(307) 637-8361
KAM, Ebenezer	Albertson's 2061	Cody	WY	82414	(307) 527-7007
PAR, Zai Tha Len	F.E Warren AFB	F.E Warren AFB	WY	82005	(307) 773-3509
WIN, Naing Naing	Safeway 67	Gillette	WY	82718	(307) 686-7352
MYI, Aung	Safeway 183	Jackson	WY	83001	(307) 733-5950
ZING, Biak Hnem	Safeway 2761	Lander	WY	82520	(307) 332-3636
MUN, Heeil	Safeway 2466	Laramie	WY	82070	(307) 721-5107
MUN, Heeil	Ridley's Family Market	Laramine	WY	82070	(307) 742-8146
GYI, Maung Than Lun	Safeway 64	Sheridan	WY	82801	(307) 672-8909
	Kroger 394L				

If you buy this franchise, your contact information may be disclosed to other buyers when you leave the franchise system.

Zenshi Food Service Counters
Company Owned Locations
As of March 31, 2026

AFCFC	Carr's 3410	30 College Rd.	Fairbanks	AK	99701	(907) 374-4100
AFCFC	Safeway 1771	1305 W. Duval Mine Road	Green Valley	AZ	85614	(520) 648-2847
AFCFC	Safeway 2069	20 W White Mountain Blvd	Lakeside	AZ	85935	(928) 367-6677
AFCFC	Safeway 1733	900 W. Deuce of Clubs	Showlow	AZ	85901	(928) 532-5656
AFCFC	Von's 2502	500 E Manchester Blvd	Inglewood	CA	90301	(310) 677-0286
AFCFC	Ralph's 277	950 N. La Brea	Inglewood	CA	90302	310.673.6365
AFCFC	Safeway 1648	2449 W Kettleman Lane	Lodi	CA	95242	(209) 367-7875
AFCFC	Safeway 2456	701 Sonoma Mountain Parkway	Petaluma	CA	94954	(707) 765-1198
AFCFC	Von's 2147	8778 19th St.	Rancho Cucamonga	CA	91701	(909) 989-1000
AFCFC	March AFB	15150 6th St.	Riverside	CA	92518	(951) 653-2206
AFCFC	Safeway 1530	3320 Arden Way	Sacramento	CA	95825	(916) 483-9389
AFCFC	Safeway 909	730 Taraval Street	San Francisco	CA	94116	(415) 665-4136
AFCFC	Safeway 2712 W	11050 Bollinger Canyon Road	San Ramon	CA	94582	(925) 359-2001
AFCFC	Safeway 2457 W	1211 W. College Ave	Santa Rosa	CA	95401	(707) 546-6877
AFCFC	Safeway 1109	2090 Harbison Drive	Vacaville	CA	95687	(707) 452-7277
AFCFC	Albertson's 803	7055 Austin Bluffs Parkway	Colorado Springs	CO	80923	(719) 264-8650
AFCFC	Safeway 1577	6520 S. Academy Blvd	Colorado Springs	CO	80906	(719) 527-4807
AFCFC	Safeway 1463	2150 S. Downing St.	Denver	CO	80210	(303) 722-6117
AFCFC	Safeway 2246	757 E. 20th Ave	Denver	CO	80205	(303) 861-8169
AFCFC	Safeway 1667	3333 Arapahoe Road	Erie	CO	80516	(720) 890-0959
AFCFC	Safeway 2913	2160 W. Drake Road	Fort Collins	CO	80521	(970) 484-6048
AFCFC	Safeway 1552	1426 E. Harmony Road	Ft. Collins	CO	80525	(970) 223-6335
AFCFC	Safeway 2791	181 W. Mineral Avenue	Littleton	CO	80120	(303) 218-2100
AFCFC	Albertson's 839	8434 South Kipling Parkway	Littleton	CO	80127	(720) 922-0305
AFCFC	Safeway 2722	8355 N Rampart Range Rd	Littleton	CO	80125	(303) 242-3563
AFCFC	Safeway 1480	9255 S Broadway	Littleton	CO	80129	(303) 683-6895
AFCFC	Safeway 1548	9229 E Lincoln Avenue	Lone Tree	CO	80124	(303) 649-9111
AFCFC	Safeway 1828	8134 Colorado Blvd	Longmont	CO	80504	(303) 833-2844
AFCFC	Big Y 140	14 Candlewood Lake Road	Brookfield	CT	06804	(800) 828-2688
AFCFC	Publix 701	4065 Hancock Bridge Rd	North Fort Myers	FL	33903	(239) 997-0212
AFCFC	Publix 639	940 NE Ocean Blvd	Stuart	FL	34996	(772) 334-0578
AFCFC	Safeway 1470	121 W Neider Ave	Coeur d'Alene	ID	83815	(208) 765-4311
AFCFC	Safeway 254	161 W Prairie Shopping Ctr	Hayden	ID	83835	(208) 772-0847
AFCFC	Jewel Osco 0202	2550 N. Clybourn Ave.	Chicago	IL	60614	(773) 348-6426
AFCFC	Jewel Osco 0754	5545 Brainard Ave	Countryside	IL	60525	(708) 352-0120
AFCFC	Jewel Osco 2265	507 E Woodlawn Ave	La Grange Park	IL	60526	(708) 354-4643
AFCFC	Jewel-Osco 3776	2021 E Laraway Rd.	New Lenox	IL	60451	(815) 463-4958
AFCFC	Jewel-Osco 3051	9350 W 159th St.	Orland Park	IL	60462	(708) 403-6920
AFCFC	Jewel Osco 4228	2128 Mannheim Rd	Westchester	IL	60154	(708) 531-9560
AFCFC	Jewel Osco 1189	747 Indian Boundary Rd	Chesterton	IN	46304	(219) 926-7172
AFCFC	Jewel Osco 76	1276 Main Street	Crown Point	IN	46307	(219) 662-0080
AFCFC	Strack & Vantil 8781	6001 Broadway Ave.	Merrillville	IN	46410	(219) 980-1468
AFCFC	Strack & Vantil 3	1605 Calumet Ave.	Valparaiso	IN	46383	(219) 464-8606
AFCFC	Shaw's 4596	18 Sisson Rd.	Harwich Port	MA	02646	(508) 432-3433
AFCFC	Big Y 141	290 TURNPIKE ROAD	WESTBOROUGH	MA	01581	
AFCFC	Safeway 47	511 Central St.	Billings	MT	59102	(406) 245-0115
AFCFC	Albertson's 19	117 W. Janeaux St.	Lewistown	MT	59457	(406) 538-5454
AFCFC	Safeway 1210	5150 Mae Anne Ave.	Reno	NV	89523	(775) 746-9000
AFCFC	Safeway 1659	1990 14th Ave. SE	Albany	OR	97322	(541) 812-2380
AFCFC	Albertsons 3553	61155 S Hwy 97	Bend	OR	97702	(541) 382-3600
AFCFC	Albertson's 2599	1800 NE 3rd Street	Bend	OR	97701	(541) 382-3661
AFCFC	Safeway 514	642 East 3rd St	Bend	OR	97701	(541) 312-6480
AFCFC	Safeway 2528	615 SW Keck Drive	McMinnville	OR	97128	(503) 474-1087
AFCFC	Safeway 2696	14840 SE Webster Rd.	Milwaukie	OR	97267	(503) 303-1071
AFCFC	Safeway 3136	8145 SW Barbur Blvd	Portland	OR	97219	(503) 452-6068
AFCFC	Safeway 1665	1705 South Highway 97	Redmond	OR	97756	(541) 504-4160
AFCFC	Carlisle Barracks Commissary	851 Summer Road	Carlisle Barracks	PA	17013	(717) 245-3105
AFCFC	Harris Teeter 423	33 Office Park Rd.	Hilton Head	SC	29928	(843) 785-6185
AFCFC	Memphis NSA	5722 Integrity Dr.	Millington	TN	38054	(901) 874-5125
AFCFC	Harris Teeter 486	624 N Glebe Road	Arlington	VA	22203	(703) 526-9100
AFCFC	Harris Teeter 308	2675 Avenir Place	Vienna	VA	22180	(703) 204-0840
AFCFC	Harris Teeter 467	2129 General Booth Blvd	Virginia Beach	VA	23454	(757) 427-6220
AFCFC	Price Chopper 137	370 Munson Ave,	Morrisville	VT	05661	
AFCFC	Safeway 1571	23961 NE STATE ROUTE 3	Belfair	WA	98528	(360) 275-0922
AFCFC	Safeway 544	21301 Hwy 410	Bonneylake	WA	98380	(253) 862-1212
AFCFC	Safeway 1186	27035 Pacific Hwy S	Des Moines	WA	98198	(253) 946-8087
AFCFC	Safeway 3540	21401 Pacific Hwy S	Des Moines	WA	98198	(206) 824-2737
AFCFC	Safeway 3521	510 Grant Rd	East Wenatchee	WA	98802	(509) 884-0707
AFCFC	Safeway 3523	14826 Highway 99	Lynnwood	WA	98087	(425) 743-7771

Zenshi Food Service Counters

Company Owned Locations

As of March 31, 2026

AFCFC	Albertson's 471	301 Marysville Mall	Marysville	WA	98270	(360) 659-5841
AFCFC	Safeway 1798	11501 Canyon Rd E	Puyallup	WA	98373	(253) 536-4792
AFCFC	Safeway 1965	9262 Rainier Ave. So.	Seattle	WA	98118	(206) 494-1120
AFCFC	Safeway 1143	8340 15th Ave N.W.	Seattle	WA	98117	(206) 782-7464
AFCFC	Safeway 1477	1423 NW Market St.	Seattle	WA	98107	(206) 784-6480
AFCFC	Safeway 1508	3820 Rainier Ave S	Seattle	WA	98118	(206) 725-9575
AFCFC	Safeway 1885	516 1st. Ave. W.	Seattle	WA	98119	(206) 494-1685
AFCFC	Albertson's 3419	17520 SR 9 SE	Snohomish	WA	98296	(360) 668-1132
AFCFC	Albertsons 493	104 Military Rd	Tacoma	WA	98444	(253) 538-1688
AFCFC	Safeway 1407	705 Trosper Rd SW	Tumwater	WA	98512	(360) 705-3569
AFCFC	Safeway 1449	501 North Miller St.	Wenatchee	WA	98801	(509) 663-5336
AFCFC	Safeway 502	5702 Summitview Ave	Yakima	WA	98908	(509) 965-3622

Zenshi Food Service Counters
List of Franchisees Who Transferred
As of March 31, 2026

FC Name	Address	City	State	Zip	Phone	STORE CODE
TANGBOU, Zaugun	3240 Penland Pkwy Spc 145	Anchorage	AK	99508	(907) 744-8239	CAR1812
KIM, Dal Khan	1110 Slim William Way	Juneau	AK	99801	(404) 824-2296	SAF1820
Hnin, Wai Wai	7020 Turn Berry Highlands Cove	Gardendale	AL	35071	(407) 497-7844	PUB1206
CHANG, Elle	180 Hughes Rd.	Madison	AL	35758 - 1173	(217) 408-8403	PUB0209
KIM, Lal Thafam	4115 W. Rovey Ave.	Pheonix	AZ	85019	(602) 715-5436	ALB0991
KIM, Lal Thafam	4115 W. Rovey Ave.	Pheonix	AZ	85019	(602) 715-5436	SAF1510
ABDALLAH, Rawda Hussein	31357 N Shale Dr	San Tan Valley	AZ	85143	(480) 587-2800	SAF1819
PAIK, Chung Ja	1525 Schiller St #K	Alameda	CA	94501	(510) 846-1550	SAF1953
SHWE, Myint	7605 McConnel Dr.	Citrus Heights	CA	95610	(916) 912-8050	SAF1530
BUI, Kimoanh Thi	1898 Premier Place	Concord	CA	94520-4050	(925) 330-4648	DRG004
MA, Qiling	4231 Sherwood Ct	Concord	CA	94521-3354	(317) 249-7490	SAF1192
OO, Kristine	7475 Burnham Way	Dublin	CA	94568	(925) 967-7666	SAF1682
ALBERTO, Walter Ramiro	2462 Russ Street	Eureka	CA	95501	(916) 995-3785	SAF0975
ALBERTO, Walter Ramiro	2462 Russ Street	Eureka	CA	95501	(916) 995-3785	SAF1640
ALBERTO, Walter Ramiro	2462 Russ Street	Eureka	CA	95501	(916) 995-3785	SAF2908
CHANG, Hsien-Kuei	4181 Rainbow Terrace	Fremont	CA	94555	(510) 676-4818	SAF0993
CHEN, Sam Wencan	4596 Celia Ct.	Fremont	CA	94555	(510) 579-5556	SAF3132W
HTUN, Aye Aye Maw	1631 Cobblestone Ct	Hollister	CA	95023	(408) 529-9570	SAF0695
LI, Zhuhui	4208 Trailblazer Loop	Roseville	CA	95747-4418	(916) 212-4328	SAF1890
HEIN, Maung	4641 Parkwest Dr. Apt. 7	San Jose	CA	95130-1450	(408) 661-8069	SAF0767
SONE, Pye	2909 Nieman Blvd APT 333	San Jose	CA	95148	(510) 474-8617	SAF3095
TAN, Thein	10130 Donner Trail Rd. Apt. 3	Truckee	CA	96161-4968	(925) 759-2545	SAF1266
THET, Naing	4828 Rocklin Dr.	Union City	CA	94587	(510) 673-9246	SAF0316
KHADKA RAUT, Sita	3252 S Jebel Way	Aurora	CO	80013	(720) 838-4173	MIL0007
OH, Hyun Sook	3071 S. Macon Cir.	Aurora	CO	80014	(720) 808-2226	SAF2612
OH, Hyun Sook	3071 S. Macon Cir.	Aurora	CO	80014	(720) 808-2226	SAF0008
TUN, Ko Ko	10702 E Exposition Ave. Apt. 106	Aurora	CO	80012	(720) 403-1294	ALB839
TUN, Ko Ko	10702 E Exposition Ave. Apt. 106	Aurora	CO	80012	(720) 403-1294	SAF2722
CUNG, Al	13787 Vispo Way	Broomfield	CO	80020	(806) 376-3561	SAF2812
CUNG, Al	13787 Vispo Way	Broomfield	CO	80020	(806) 376-3561	SAF1656
ZAW, Jessica Khine	3630 Vineyard Circle	Colorado Springs	CO	80922	(917) 982-7986	SAF2816
ZAW, Jessica Khine	3630 Vineyard Circle	Colorado Springs	CO	80922	(917) 982-7986	SAF2839
BIK, Bawi Siang	PO BOX 773180	Steamboat Springs	CO	80477	(432) 818-3747	SAF0637
ZIN, Saw Ba Oo Gyi	63 Hanmer St.	Hartford	CT	06114		BGY044
SOE, Hein Zaw	1081 New Haven Rd. Apt 12I	Naugatuck	CT	06770-4778	(609) 233-6166	BGY090
TOBZIN TASHI, FNU	11 Wallace St	Shelton	CT	06484	(612) 423-4377	BGY050
HTET, Nyi Lin	505 Florida Ave NE Apt. A	Washington	CT	20002-3872	(202) 746-7652	HT-398
SHERPA, Pema Dolma	32 Alderwood Dr	West Hartford	CT	06117	(510) 646-3487	BGY090
KIM, Young C.	448 Opal Ct.	Altamonte Springs	FL	32714	(407) 921-3650	PUB0442
ZAW, Han Lin	620 Eastwood Ct.	Altamonte Springs	FL	32714	(407) 371-2761	PUB0742
SANG, Pau	1707 Queen Palm Dr	Apopka	FL	32712	(352) 804-4527	PUB0004
KHAING, Soe Min	1240 Orange Blossom Cir Apt. 103	Auburndale	FL	33823-5791	(773) 766-5872	PUB0557
KHAING, Soe Min	1240 Orange Blossom Cir Apt. 103	Auburndale	FL	33823-5791	(773) 766-5872	PUB1788
LIAN, Thang Ngaih	22755 SW 54th Way	Boca Raton	FL	33433	(754) 232-8202	PUB0606
ZAW, Khin	300 Lancaster St.	Bocaraton	FL	33487	(954) 899-2085	PUB0785
TUN, Saw Win	9833 Coronado Lake Dr	Boynton Beach	FL	33437-5337	(561) 504-6461	PUB1041
Qader, Matthew M	2972 Trestle Way	Cantonment	FL	32533 - 4754	(850) 800-0300	PUB1604
THEIN, Hla	4129 SW 7th Ave	Cape Coral	FL	33914-5889	(786) 831-2915	PUB1764
KHUP, Paul	2662 N McMullen Booth Rd #439	Clearwater	FL	33761	(206) 708-5193	PUB0705
KHUP, Paul	2662 N McMullen Booth Rd #439	Clearwater	FL	33761	(206) 708-5193	PUB1413
Drawitz, Annie Mueanfan	2435 Oklahoma St.	Cocoa Beach	FL	33406	(856) 776-3066	PUB1274
AYE AYE, Ma Khin	5890 SW 99th Terrace	Cooper City	FL	33328	(917) 362-7039	PUB0747
HTAY, Myint	2710 N.W. 115th Ter.	Coral Springs	FL	33065	(954) 551-2101	PUB1834
Steven, Na Na	100 Hollyberry Branch Ln.	Daytona Beach	FL	32124 - 3680	(907) 744-8345	PUB1755
MANG, Ngun Hre	1589 Franklin Way	Dunedin	FL	34698	(515) 553-5097	PUB0867
YANG, Xiaoqiao	10140 Tin Maple Dr. Unit 22	Estero	FL	33928-7403	(626) 382-6061	PUB1449
KHIN, BD Kyaw Moe	18069 Phlox DR	Fort Myers	FL	33967-3150	(412) 607-7433	PUB0604
MARAN, Hkamhtun	4361 NW 35th St	Gainesville	FL	32605-6030	(850) 630-8194	PUB1560
ZAYYA, Aung	1436 NE 40th Rd.	Homestead	FL	33033-5911	(505) 595-9174	PUB1247
MUAN, Thang Sian	2652 Moorsfield Ln	Jacksonville	FL	32225	(904) 608-6498	PUB0455
WIN, Aung	1414 Delmar St.	Jacksonville	FL	32205 - 6836	(904) 476-7918	PUB1115
HLAING, Chan Mya Aye	306 2nd St	Jupiter	FL	33458	(954) 881-3313	PUB0053
HLAING, Chan Mya Aye	306 2nd St	Jupiter	FL	33458	(954) 881-3313	PUB0871
THANG, Robert Cingo	17605 Carver Ave	Jupiter	FL	33458	(786) 683-8828	PUB1333
SUM, Khup Sai	797 Teague Trail, Apt. 13203	Lady Lake	FL	32159 - 3152	(918) 810-2339	PUB0641

Zenshi Food Service Counters
List of Franchisees Who Transferred
As of March 31, 2026

DA VITORIA LOBO, Sabei	2330 Huron Trl	Maitland	FL	32751	(407) 664-9442	PUB1070
THAWNG, JC	2267 Royal Poinciana Blvd.	Melbourne	FL	32935-3394	(321) 615-6259	PUB0738
MANG, Thang Khan	16662 SW 82nd Terrace	Miami	FL	33193	(305) 586-6068	PUB0375
KHAM, Joseph	19441 SW 30th Street	Miramar	FL	33029 - 5808	(754) 214-3741	PUB1040
KIM, Thang	15260 SW 46th Ct.	Miramar	FL	33027 - 3665	(786) 262-8155	PUB0372
NANG, Lian Suan	2192 SW 129th Ave	Miramar	FL	33027 - 2649	(754) 423-3901	PUB0837
NANG, Lian Suan	2192 SW 129th Ave	Miramar	FL	33027 - 2649	(754) 423-3901	PUB1124
AYE, Tin Tun	1920 NE 187th Dr.	N. Miami Beach	FL	33179-4348	(954) 445-3895	PUB0127
ZUNG, Ngun	3634 Heron Island Drive	New Port Richey	FL	34655-3027	(727) 678-1519	PUB1020
HTIKE, Than	3407 Potomac Creek Ct	Orlando	FL	32837-4014	(407) 301-2578	PUB1849
KHAI, Thang Kim	2216 Amherst Ave	Orlando	FL	32804	(407) 406-4525	PUB1381
OO, Zaw Naing	4424 Saddleworth Cir	Orlando	FL	32826-4121	(301) 803-8684	PUB1789
PYONE, Hnin Ei	20146 Marlin St	Orlando	FL	32833	(919) 428-0714	PUB1092
SIT, Hmun Hmun	5203 Springside Ct	Orlando	FL	32819	(352) 874-2815	PUB0331
NAING, Win	2431 Lingard Ave.	Sanford	FL	32771-6009	(386) 333-4104	PUB1338
NUAM, Lun Ngaih	93 Dune Lake Circle Unit J206	Santa Rosa Beach	FL	32459	(404) 964-0386	PUB2023
TOHING, Kam Khan Kim	215 Beacon Way	Santa Rosa Beach	FL	32459	(352) 682-7378	PUB0153
HA, Sai Thi	5469 Ashton Manor Dr.	Sarasota	FL	34233	(904) 826-7145	PUB0828
MANG, Nem Ngaih	7654 Ashford CT N	St. Petersburg	FL	33709	(813) 325-2294	PUB1034
MANG, Nem Ngaih	7654 Ashford CT N	St. Petersburg	FL	33709	(813) 325-2294	PUB1663
GO, Vungh Kap	629 Eagle View Circle	Tallahassee	FL	32311	(850) 264-4282	PUB0887
GO, Vungh Kap	629 Eagle View Circle	Tallahassee	FL	32311	(850) 264-4282	PUB0610
MYINT, Ohn	3131 W. Oakellar Ave.	Tampa	FL	33611	(813) 786-6872	PUB1506
ONG, Nai C	503 E Jackson St #105	Tampa	FL	33602	(813) 324-0500	PUB0532
SUI, Dawt Nei	1506 S 78th St.	Tampa	FL	33619	(317) 403-9951	PUB0685
LIAN, Vung San	16491 Blatt Blvd Apt 203	Weston	FL	33326	(954) 934-3365	PUB0252
FANAI, Lalpui Thanga	7146 Summit Dr.	Winter Haven	FL	33884-2763	(704) 737-6391	PUB0097
PUM, Lang Suan	35 Greyfield Dr	Brunswick	GA	31525	(912) 506-3240	PUB0431
MANG, Hau Lian	1841 Vidalia Court	Dacula	GA	30019	(770) 568-1764	PUB0451
LEE, Yoo Won	2814 Carriage Rowe	Duluth	GA	30096	(404) 643-4492	PUB0536
TUN, Zar Ni Mya	1504 Danton Dr.	Elberton	GA	30635	(919) 538-2271	PUB1146
SHI, Guang Xi	4790 Sierra Creek Dr	Hoschton	GA	30548	(678) 557-2680	KRO0449A
GAO, Hang	2333 Infield Ln	Lawrenceville	GA	30043	(347) 277-7777	PUB1827
MOE, Moe	1131 Adah Ln	Lawrenceville	GA	30043-7206	(470) 265-2450	PUB0646
THANG, Van Lian	2515 Lindsey Oak Lane	Lawrenceville	GA	30044	(404) 709-1252	KRO0495A
TLAN, Henry	1441 Jernigan Bluff	Lawrenceville	GA	30045	(770) 379-3065	PUB1893
SONG, Huo Jiao	6624 Wandering Way	Norcross	GA	30093	(678) 900-9529	PUB1044
MUNG, Francis Mang Thoung	8177 Colquitt Rd. Apt D	Sandy Springs	GA	30350 - 5964	(678) 614-4912	PUB1758
LAM, Mang	3541 Kittery Dr.	Snellville	GA	30039	(678) 362-2112	PUB0670
KHAN, Ayub	4264 ROCKBRIDGE HEIGHTS DR.	Stone Mountain	GA	30083-4224	(470) 357-4476	PUB0799
KHAN, Ayub	4264 ROCKBRIDGE HEIGHTS DR.	Stone Mountain	GA	30083-4224	(470) 357-4476	PUB1087
KHUAL, Mung Khan	4132 Indian Lakes Cir.	Stone Mountain	GA	30083-4442	(678) 751-0945	PUB1745
HUANG, Julie	3122 Hinano Street	Honolulu	HI	96815	(808) 383-3080	SAF0215
Nhkum, Zau Doi	1833 Dole Street	Honolulu	HI	96822	(808) 600-9773	SAF2944
SIAM, Zir	9871 W Cory St	Boise	ID	83704-6781	(253) 394-1149	RDL8463
LIAN, Kumar C	1817 Country Dr. Apt. 204	Grayslake	IL	60030	(317) 529-4075	JEW3464
THANG, Langh Tuan	1535 Huntleigh Dr	Wheaton	IL	60189	(630) 822-1350	JEW2702
HO, Peter	2317 Apache Lane	Woodridge	IL	60517	(630) 935-7856	JEW3368
HEIN, Kyaw	5011 Christofer Ln	Fort Wayne	IN	46806	(806) 324-9056	SAF0101
FACHAI, Nawbi	6334 NIGHTSHADE DR.	Indianapolis	IN	46237-4462	(317) 652-6125	KRO0998T
LIAN, Van Thawng	8815 Royal Meadow Dr.	Indianapolis	IN	46227	(317) 403-2371	KRO0330T
LIN, Tun Tun	8659 Manor Ave Apt D	Munster	IN	46321	(269) 986-1786	STV8891
MANG, Tial Cung	7576 S Carlisle St.	Terre Haute	IN	47802	(317) 820-9015	KRO0911T
MANG, Tial Cung	7576 S Carlisle St.	Terre Haute	IN	47802	(317) 820-9015	KRO0987T
MANG, Tial Cung	7576 S Carlisle St.	Terre Haute	IN	47802	(317) 820-9015	KRO0981T
ZAA THANG, Biak Hlei	2501 Soldiers Home Rd. Apt 57A	West Lafayette	IN	47906-1768	(317) 756-7259	KRO0824T
SAILUNG, Alex Lalthansanga	275 Bohicket Rd.	Whiteland	IN	46184 - 7021	(765) 346-8096	PUB1478
LAL, Mang Sian	622 Aberdeene Ct.	Bowling Green	KY	42104 - 5458	(270) 421-6171	PUB1621
CHHAKCHHUAK, Mordecai Zodinliana	1101 Beaumont Center Ln Apt 20106	Lexington	KY	40513	(317) 515-8718	KRO0774L
KHUP, Pau	2143 Lansill Rd.	Lexington	KY	40504 - 3009	(270) 935-8568	PUB0518
KHUP, Pau	2143 Lansill Rd.	Lexington	KY	40504 - 3009	(270) 935-8568	PUB1193
LIAN, Ezra Ngun Thawm	5305 Senator Ln	Louisville	KY	40219	(405) 412-6092	KRO0408L
NGURHMINGTHANGA, Benjamin	123 Kingston Ave. Apt. 2	Louisville	KY	40214-2258	(812) 406-3093	KRO0752L
NGURHMINGTHANGA, Benjamin	123 Kingston Ave. Apt. 2	Louisville	KY	40214-2258	(812) 406-3093	KRO0763L
NGURHMINGTHANGA, Benjamin	123 Kingston Ave. Apt. 2	Louisville	KY	40214-2258	(812) 406-3093	KRO0327L
LIAN, Joshua Van	137 Deck Dr., Apt B	Somerset	KY	42503	(404) 934-7791	PUB0095

Zenshi Food Service Counters
List of Franchisees Who Transferred
As of March 31, 2026

BAWK, Zau	216 Geneva St Apt. E	Metairie	LA	70005	(504) 495-6676	RFM128
BAWK, Zau	216 Geneva St Apt. E	Metairie	LA	70005	(504) 495-6676	RFM131
GYALTSEN, Sherab	86 West St	Granby	MA	01033-9462	(917) 478-2657	BGY108
GARCHA, Samten Norbu	88 Endicott Ave 1st Floor	Revere	MA	02155-4156	(646) 626-3800	SHA0602
HTUN, Khin Htike Htike	1607 Main St. Apt. A 216	Springfield	MA	01103	(401) 678-1218	BGY134
LIAN, Saw Pum	9559 N. Laurel Rd.	Laurel	MD	20723-1845	(703) 835-4380	HT-231
TIAL, Elena Hlawn	7305 W Springbook Ct	Middletown	MD	21769-7568	(202) 870-4479	HT-487
WIN, Phyu Phyu	2015 Cramer Point Ct	Odenton	MD	21113	(301) 356-0405	HT-322
YI, Hla Hla	108 Gracie Circle	Chapel Hill	NC	27516	(919) 923-5145	HT-120
MANG, Nang	6625 Old Post Rd.	Charlotte	NC	28212	(704) 557-5041	PUB1484
MUTAW, Kaw	9724 E W T Harris Blvd.	Charlotte	NC	28227	(980) 308-4538	HT-046
SAN, Ruby	12946 Silvaire Farm Rd	Charlotte	NC	28278	(704) 261-5301	PUB1483
SANG, Daniel Sui Ngun	7300 Hillbourn Dr	Charlotte	NC	28212	(515) 210-7015	PUB1342
SI, Maung	2533 Amber Creste Ln	Charlotte	NC	28212-6313	(704) 591-5931	HT-372
LE, Victor C.	31 Zion Place	Clayton	NC	27520	(980) 785-7885	PUB1727
THAN, Hrang	91 Topwater Dr. Apt. 102	Clayton	NC	27527 - 8661	(919) 951-9655	PUB0891
THANG, Kio Cin	1610 ELKHART CIR	Gastonia	NC	28054-7745	(817) 888-4653	HT-030
SINT, Than Than	4105 W. Friendly Ave.	Greensboro	NC	27410	(336) 681-8664	HT-033
SAY, Pa Aye	1208 Tipton St	High Point	NC	27262 -6985	(940) 782-3055	HT-354
Hre, Billy Luai	14330 Tribute Place Dr. Apt. 206	Huntersville	NC	28078-3465	(269) 589-1537	HT-209
SHWE, Aung Myo Oo	164 Swan View DR	Kill Devil Hills	NC	27948-8048	(252) 202-4066	HT-175
FACHHAI, Zan Thang	12207 Hickory Knoll Ct.	Matthews	NC	28105	(704) 303-3448	HT-268
HTAY, Hninnu	5225 Poplar Knoll Dr	Matthews	NC	28105	(704) 808-0176	HT-039
KIM, Gin Khan	3508 Fairfax Woods Dr.	Matthews	NC	28105 - 4903	(980) 221-7612	PUB1619
KIM, Sun Nam	7709 Greylock Ridge Rd.	Matthews	NC	28105	(704) 807-1838	HT-182
JOHNSON, Chuvee Kawhtoolei	855 Washington Post Road Lot #107	New Bern	NC	28562	(910) 331-0182	HT-063
LIN, Popwe	4320 Goron Road	Wilmington	NC	28405	(910) 674-7640	HT-158
MOO, Eh	218 Rockwell Rd.	Wilmington	NC	28411	(910) 616-1129	PUB1516
THANG, Tuan Hlei	25 Eaglefeather Path	Youngsville	NC	27596	(919) 360-5851	HT-330
HTUT, Jeffrey Kaung	2410 Whitehorse Mercerville Rd	Hamilton	NJ	08619-1904	(609) 337-0023	MIL0070
AUGUSTIN, Sa	9624 Slickrock CT NW	Albuquerque	NM	87114-4911	(505) 620-2704	ALB915
SAZUL, HLAH	26 Ironwood Pl	Roswell	NM	88201	(214) 429-5096	ALB0690
LWIN, KyawMyo	688 Stone Hammer Ave	Las Vegas	NV	89183	(702) 885-9951	VO-2390
LWIN, KyawMyo	688 Stone Hammer Ave	Las Vegas	NV	89183	(702) 885-9951	VO-2615
LIN, Jing	819 54th St.	Brooklyn	NY	11220 - 3208	(917) 770-8859	PUB1412
CEU, Nei	11 Cresthaven Ln	Clifton Park	NY	12065 - 2702	(518) 805-4772	MTN024
LI, Yafei	4147 Grant Rd	Central Point	OR	97502	(347) 403-4699	SAF3212
LWIN, Zaw Min	6132 SE Lambert St	Portland	OR	97206-8160	(248) 277-6578	SAF1523
MOE, Aye T	8425 SE Bush St #8425	Portland	OR	97266-2843	(503) 757-7713	SAF1447
SWE, Thet Hta	649 Old River Ct.	Bluffton	SC	29909 - 3955	(984) 269-9072	PUB1644
SENG, Ah Ba	2040 Ashely River Rd. Apt 906	Charleston	SC	29407 -8028	(402) 575-8141	HT-365
KAM, Akam Ral	333 Roscommon Dr. Unit 104	Hardeeville	SC	29927 - 2639	(843) 304-9928	PUB1354
KHENGLAWT, Katherine Biakhleizing	2607 Planter's Pointe Blvd.	Mount Pleasant	SC	29466	(269) 830-3154	HT-019
NAW, Lum	600 Maple Top Dr	Antioch	TN	37013	(615) 715-6093	PUB1164
THET, John	6159 Brentwood Chase Dr	Brentwood	TN	37027	(615) 585-8194	KRO0567V
THET, John	6159 Brentwood Chase Dr	Brentwood	TN	37027	(615) 585-8194	KRO0547V
UK, Soloman	2740 Trenton Road. Apt. 202	Clarksville	TN	37040	(317) 794-6753	PUB1802
UK, Solomon Pa	1508 Green Grove Way	Clarksville	TN	37043-1548	(317) 993-2688	PUB1648
PATEL, Jayesh	3065 London View Dr.	Murfreesboro	TN	37128	(931) 607-2984	PUB1680
KHAI, Khen Hau	230 Ocala Dr.	Nashville	TN	37211	(615) 290-8485	PUB0142
GEN, Than Khan	7809 Ellen Dr.	Smyrna	TN	37167	(615) 397-6589	PUB0182
KHAI, Cin Khat	9003 Capshaw St.	Smyrna	TN	37167 - 7404	(615) 578-4055	PUB1360
NEM, Luan Sian	409 Spitzy Ln	Smyrna	TN	37167-2972	(615) 974-9853	PUB1116
PIANG, Kam Sian	112 Jennings Cir	Tullahoma	TN	37388	(314) 452-0332	PUB1613
HLEI, Thawng	3501 Westlawn St.	Amarillo	TX	79102	(806) 477-8383	UNI523
THAMOTSHU, Paipi	1318 Carolyn St.	Amarillo	TX	79107	(806) 206-9784	UNI529
YA, Kyaw Thu	2230 Laurel St.	Amarillo	TX	79109-1918	(806) 282-0122	UNI526
THAW, Eh Dow	5808 Knoll pines pass	Austin	TX	78724	(737) 802-0659	RAN2471
THAW, Eh Dow	5808 Knoll pines pass	Austin	TX	78724	(737) 802-0659	RAN1850
THAW, Eh Dow	5808 Knoll pines pass	Austin	TX	78724	(737) 802-0659	RAN2477
LWIN, Wai Wai	15 Turtle Xing	Canyon	TX	79015 - 7296	(806) 567-3895	UNI532
CHIN, Zerobe Dawt Sung	O'Henry Dr 3734	Garland	TX	75042	(469) 755-7965	TOM3608
CHIN, Zerobe Dawt Sung	O'Henry Dr 3734	Garland	TX	75042	(469) 755-7965	TOM2503
MANG, Peng Uk	17834 Trophy Deer Ct.	Houston	TX	77084	(832) 883-9585	RAN1773
LIAN, Za	823 Blue Oak Dr.	Lewisville	TX	75067	(214) 680-4473	TOM3658
NI CER CIN, Esther	2022 Milano Lane	Lewisville	TX	75077	(214) 744-9232	TOM1789

Zenshi Food Service Counters
List of Franchisees Who Transferred
As of March 31, 2026

THANG, Uk Ling	1400 N State Highway 360 Apt. 1822	Mansfield	TX	76063-3538	(469) 988-1283	UNI696
MANG, Ngun Lian	1109 Oakmont Dr	Richardson	TX	75081	(469) 769-2007	TOM2578
MANG, Ngun Lian	1109 Oakmont Dr	Richardson	TX	75081	(469) 769-2007	TOM1925
MANG, Ngun Lian	3002 Cromwell Ave.	Wichita Falls	TX	76309 - 4702	(806) 474-6067	UNI551
PYIT, Thaw Wun	6016 Van Dorn Dr	Wichita Falls	TX	76310-2828	(940) 447-4444	UNI517
CIN, Sui	1869 West Sir Jeffrey Dr	Salt Lake	UT	84116	(385) 321-7395	MIL0052
JIA, Hongyan	24568 Rosebay Ter.	Aldie	VA	20105-5411	(571) 309-3696	HT-238
KHAM, Langh Lian	4013 Buchanan Dr.	Hampton	VA	23669-4607	(757) 298-3457	MIL0060
MAUNG, Lei Win	715 W. Church Rd.	Sterling	VA	20164	(202) 271-5171	HT-023
LING , Tial Hmung	760 N Central Dr. Apt. E235	Moses Lake	WA	98837 - 3096	(435) 724-7472	SAF1589
HMUNG, Siang L	19911 20th Ave Ct. E	Spanaway	WA	98387	(972) 503-2224	SAF0547

If you buy this franchise, your contact information may be disclosed to other buyers when you leave the franchise system.

Zenshi Food Service Counters
Terminated List
As of March 31, 2026

Franchisee Name	Address	City	State	Zip	Phone
BAWI, Rosy Dim	628 Garrett Drive	Prattville	AL	36066	0
BAWI, Rosy Dim	628 Garrett Drive	Prattville	AL	36066	0
IRELAND, In	4225 S. Evergreen Ave.	Tucson	AZ	85730	(425) 890-1433
MOON, Jeong Hee	32553 N. Hidden Canyon Dr.	San Tan Valley	AZ	85144	(207) 632-9743
CIN, Biak	560 Penn Ln. Apt. 206	Wickenburg	AZ	85390 - 6201	(832) 322-6684
CIN, Biak	560 Penn Ln. Apt. 206	Wickenburg	AZ	85390 - 6201	(832) 322-6684
CIN, Biak	560 Penn Ln. Apt. 206	Wickenburg	AZ	85390 - 6201	(832) 322-6684
KHAING, Cho Cho	3331 W Ocotillo Rd	Phoenix	AZ	85017	(561) 685-8470
KYAW, Aung	2933 W Claremont St	Phoenix	AZ	85017-1630	(561) 685-8470
KYAW, Aung	2933 W Claremont St	Phoenix	AZ	85017-1630	(561) 685-8470
TIAL, Ni	3830 E South Fork Dr	Phoenix	AZ	85044-6604	(954) 881-3313
MYAT, Khine Su	3815 Nathan Way	Palo Alto	CA	94303-4520	(207) 632-9743
SOE, Min	11278 Segrell Way	Culver City	CA	90230	(678) 888-8838
HTAY, Khin Maung	5264 Yerba Buena Rd	Santa Rosa	CA	95409-3837	(404) 643-8676
HAUSER, Richard	131 Macklin Dr.	Cotati	CA	94931	(404) 643-8676
CHEN, Xiaoke	18442 Santar St.	Rowland Heights	CA	91748-1932	(832) 322-6684
CUI, Zhiyun	5418 N Delta St.	San Gabriel	CA	91776	(832) 322-6684
ZENG, Jinfang	7360 Legran Dr.	Sacramento	CA	95829 - 8060	0
THANG, Joseph	10120 Bruceville Rd Apt. #344	Elk Grove	CA	95757	(954) 881-3313
NGUYEN, Quan Thoi	20051 Bushard St.	Huntington Beach	CA	92646 - 4806	(207) 632-9743
RUNG, Mang	2410 Elm Ave	Long Beach	CA	90806	(240) 477-2069
AYE, Thaw Zin	1270 East Ave, Unit 115	Chico	CA	95926	(210) 322-9108
AYE, Thaw Zin	1270 East Ave, Unit 115	Chico	CA	95926	(210) 322-9108
MYO, Myo	94 San Miguel Ave.	Daly City	CA	94015 - 3950	(207) 632-9743
CAO, Xueying	1708 S. 6th St. Apt 2	Alhambra	CA	91803	(786) 413-7518
TRAN, Jaclyn Mai	1902 W Harriet Ln	Anaheim	CA	92804	(954) 881-3313
HUANG, Allen Shu-Xian	4218 Westminster Cir	Fremont	CA	94536	(404) 643-8676
NAING, Thet	456 Higate Dr.	Dally City	CA	94015	(207) 632-9743
NAING, Thet	456 Higate Dr.	Dally City	CA	94015	(207) 632-9743
Oo, Aung Ni	3508 W 132nd street	Hawthorne	CA	90205	(416) 606-4861
GALAVIZ, Wendy	14181 Green Vista Dr	Fontana	CA	92337	(510) 364-7440
LIAO, Chyong-Ing	4283 S Glacier Trl	Ontario	CA	91762-7275	(626) 863-9509
KIM, Jeoungdai	2118 Los Ranchitos Rd	Chino Hills	CA	91709	(561) 685-8470
AWNG, Mary Lu	6003 W. 6th St	Los Angeles	CA	90036	(210) 322-9108
YE, Gang	2851 S. La Cadena Dr. SPC69	Colton	CA	92324	(506) 878-7131
LUO, Hui Yu	2438 Nutwood Ave. Apt. K30	Fullerton	CA	92831	(626) 863-9509
LI, John Wen	5 Bingham Cir	Sacramento	CA	95831	(626) 863-9509
TAN, Hwee Ngaw	2711 Arlington Ave.	Torrance	CA	90501	(954) 881-3313
PARK, Jung Mi	105 Towngate	Irvine	CA	92620-3873	(503) 990-3830
KIM, Bok Soon	13545 Zinnia Hills Pl #104	San Diego	CA	92130	(561) 685-8470
SHIN, Kyungmi	3192 Morning Way	La Jolla	CA	92037	(678) 888-8838
CAO, Yang	5575 Lark Sparrow Ct.	Jurupa Valley	CA	91752-4510	(786) 413-7518
JANG, Meme	2291 ZINFANDEL DR	Rancho Cordova	CA	95670-5138	(224) 381-6836
CHEN, De Quan	5204 Olivehurst Way	Elk Grove	CA	95758-6708	(832) 322-6684
CHEN, Xiangwu	4953 Charmian Dr	Santa Rosa	CA	95409-3524	(832) 322-6684
KYAW, Myo Myint	8184 Crystal Walk Cir	Elk Grove	CA	95758	(561) 685-8470
PARK, Kyoung Sook	17139 E. Cedar Gulch Dr.	Parker	CO	80134	(503) 990-3830
PARK, Kyoung Sook	17139 E. Cedar Gulch Dr.	Parker	CO	80134	(503) 990-3830
RAI, Pramod	4544 Andes St.	Denver	CO	80249	(240) 477-2069
OO, Ye Lin	9808 E Mexico Ave Apt. 1102	Aurora	CO	80247 - 6224	(416) 606-4861
OO, Ye Lin	9808 E Mexico Ave Apt. 1102	Aurora	CO	80247 - 6224	(416) 606-4861
KIM, Seoghwan	2620 S. Parker Rd. Ste. 143	Aurora	CO	80014	(561) 685-8470
KIM, Seoghwan	2620 S. Parker Rd. Ste. 143	Aurora	CO	80014	(561) 685-8470
KIM, Uichan	23057 E Orchard PL	Aurora	CO	80015-6664	(561) 685-8470
KIM, Uichan	23057 E Orchard PL	Aurora	CO	80015-6664	(561) 685-8470
LIN, Naing	8000 E 12TH AVE APT 12-B5	DENVER	CO	80220-3380	(626) 863-9509

Zenshi Food Service Counters
Terminated List
As of March 31, 2026

HTAY, Aung	333 S Peoria CIR	Aurora	CO	80012-2245	(404) 643-8676
OMINOS ESPINOZA, Ivan A	102 Hoyts Hill	Bethel	CT	06801	(503) 990-3830
MYAT, Tinma	5241 NW 113th AVE	Coral Springs	FL	33076-3008	(207) 632-9743
KHAI, Ngin Khawm	2014 SW Import Drive	Port St. Lucie	FL	34953	(561) 685-8470
OO, Tin Tun	1001 Keystone Dr Apt F	Jupiter	FL	33458	(416) 606-4861
OO, Tin Tun	1001 Keystone Dr Apt F	Jupiter	FL	33458	(416) 606-4861
MUNG, Kim Hau Tawi	842 S. Meander Dr.	Altamonte Springs	FL	32714	(207) 632-9743
AUNG, Baby	2535 Houston Cir.	Gulf Breeze	FL	32563 - 9749	(210) 322-9108
ALEXANDER, Carol	17140 Caloosa Trace Circle	Fort Myers	FL	33967	(210) 322-9108
Oo, Hnin Hay Man	2160 Corbett Rd.	Orlando	FL	32826 - 4908	(416) 606-4861
PUM, Mang	7290 Freedom St.	Hollywood	FL	33024	(503) 990-3830
SAW, Tnar	966 E 13th Sq	Vero Beach	FL	32960	(678) 888-8838
TANG, Chi Lung	2671 Red Egret DR	Bartow	FL	33830-2992	(954) 881-3313
HTIKE, Htike Aung	7849 Venture Center Way Apt. 6107	Boynton Beach	FL	33437-3162	(404) 643-8676
THANG, Kam Tung Mung	1358 NE 182nd St	North Miami Beach	FL	33162-1334	(954) 881-3313
THANG, Kam Tung Mung	1358 NE 182nd St	North Miami Beach	FL	33162-1334	(954) 881-3313
LIAN, Ni	2861 Pine Run Rd. Apt#103	Naples	FL	34109	(626) 863-9509
KHUP, Gin Suan	3950 75th St. W Apt. 1107	Bradenton	FL	34209-5828	(561) 685-8470
CHU, Yueh Jiuan	2769 Plennie Ln	Lawrenceville	GA	30044	(832) 322-6684
LIAN, Johan	145 N Chapel Dr	Brunswick	GA	31525	(626) 863-9509
XU, Fan	1613 Broomfield Way	Lawrenceville	GA	30044-2048	0
LIN, Dong	7910 Turnberry Way	Duluth	GA	30097	(626) 863-9509
IRANG LUNG, Sui Tin Hner	414 Rue De Chateau	Stone Mountain	GA	30083	(404) 643-8676
ZAW, Maung Than	727 E. Huckleberry Ct.	Kuna	ID	83634	0
ZI, Ngun	646 Meadowview Dr.	West Chicago	IL	60185 - 5150	(770) 481-0760
SUI, Lily	4505 Dumoulin Ave	Lisle	IL	60532-1204	(678) 888-8838
SUI, Lily	4505 Dumoulin Ave	Lisle	IL	60532-1204	(678) 888-8838
SUI, Lily	4505 Dumoulin Ave	Lisle	IL	60532-1204	(678) 888-8838
QI, Oscar	705 W. 31st Street Unit. 1W	Chicago	IL	60616	(703) 987-7833
SWE, Thet Min	470 Northview Ln	Hoffman Estates	IL	60169	(678) 888-8838
LIAN, Francis T	1N 736 Forest Ave	Gllen Ellyn	IL	60137	(626) 863-9509
LIAN, Francis T	1N 736 Forest Ave	Gllen Ellyn	IL	60137	(626) 863-9509
LIAN, Francis T	1N 736 Forest Ave	Gllen Ellyn	IL	60137	(626) 863-9509
IANG, C C	507 Westwood Dr	Wheaton	IL	60187	(425) 890-1433
LIAN, Cung T	1217 Florence Ave. Apt.16	Pekin	IL	61554 - 7359	(626) 863-9509
LIAN, Cung T	1217 Florence Ave. Apt.16	Pekin	IL	61554 - 7359	(626) 863-9509
MANG, Sing Suan	9904 W 58th St, Unit C3	Countryside	IL	60525	(207) 632-9743
MANG, Sing Suan	9904 W 58th St, Unit C3	Countryside	IL	60525	(207) 632-9743
MANG, Sing Suan	9904 W 58th St, Unit C3	Countryside	IL	60525	(207) 632-9743
KO, Aung Ko	1646 W. Pratt Blvd. Apt. 2J	Chicago	IL	60626	(561) 685-8470
THWE, Su Myat	470 Northview Lyn.	Hoffman Estate	IL	60169	(954) 881-3313
OO, Aung Aung	0S748 Myrtle Street	Winfield	IL	60190	(416) 606-4861
JN THANG, Ram Tiam Hng,	163 W Division St Apt 314	Chicago	IL	60610-1983	(678) 888-8838
JN THANG, Ram Tiam Hng,	163 W Division St Apt 314	Chicago	IL	60610-1983	(678) 888-8838
LING, Lian Khar	0N164 Page St	Winfield	IL	60190-1135	(626) 863-9509
LING, Lian Khar	0N164 Page St	Winfield	IL	60190-1135	(626) 863-9509
AUNG, Myint	2342 Starlight Dr.	Schererville	IN	46375 - 1738	(210) 322-9108
AUNG, Myint	2342 Starlight Dr.	Schererville	IN	46375 - 1738	(210) 322-9108
YEENA, Daryusi	250 Westwood Lane	South Bend	IN	46619-1641	(506) 878-7131
YEENA, Daryusi	250 Westwood Lane	South Bend	IN	46619-1641	(506) 878-7131
LIAN, Thang Ci	5424 Adrian Orchard Dr.	Indianapolis	IN	46217	(626) 863-9509
DIN, Ma	122 Park Ave.	Chesteron	IN	46304 - 3239	(214) 541-8146
DIN, Ma	122 Park Ave.	Chesteron	IN	46304 - 3239	(214) 541-8146
BRANG, Ah	120 Meadows Cir	Crown Point	IN	46307-8648	(213) 703-4033
KHAI, Nang Suan	425 S. Haverhill Rd. Apt. 207	El Dorado	KS	67042	(561) 685-8470
TLING, Law	2451 N 107th Ter	Kansas City	KS	66109	(954) 881-3313
CIN, Van Cer	1039 N Aksarben Ct	Wichita	KS	67235-9760	(832) 322-6684
CIN, Van Cer	1039 N Aksarben Ct	Wichita	KS	67235-9760	(832) 322-6684
CIN, Van Cer	1039 N Aksarben Ct	Wichita	KS	67235-9760	(832) 322-6684
ZAW, Khant	3825 Winthrop Dr	Lexington	KY	40514	0
ZAW, Khant	3825 Winthrop Dr	Lexington	KY	40514	0

Zenshi Food Service Counters
Terminated List
As of March 31, 2026

ZAW, Khant	3825 Winthrop Dr	Lexington	KY	40514	0
SIAM, Lal Nun	26 B Deck Dr.	Somerset	KY	42503	(678) 888-8838
SIAM, Lal Nun	26 B Deck Dr.	Somerset	KY	42503	(678) 888-8838
SIAM, Lal Nun	26 B Deck Dr.	Somerset	KY	42503	(678) 888-8838
KYI, Khando	201 Providence Hill Dr Apt 20	Ashland	KY	41101-2241	(561) 685-8470
KYI, Khando	201 Providence Hill Dr Apt 20	Ashland	KY	41101-2241	(561) 685-8470
KAP, Do Lian	118 Collins Path Apt. 1	Georgetown	KY	40324 - 8463	(561) 685-8470
CHEN, Lin	6 Beaufort Cres	Winnipeg	LA	R3T 5W3	(832) 322-6684
CHUNG, Ngun	5501 Old Montgomery Hwy Apt 8122	Tuscaloosa	LA	35405 - 5068	(832) 322-6684
CHUNG, Ngun	5501 Old Montgomery Hwy Apt 8122	Tuscaloosa	LA	35405 - 5068	(832) 322-6684
REH, Mee	28 Bridge St. #13	Lowell	MA	01852	(240) 477-2069
TIN, David	14 Bittersweet Ln.	South Dennis	MA	02660 - 3725	(954) 881-3313
MAUNG, Win Thein	11 Round House Rd.	Leominster	MA	01453-1594	(207) 632-9743
KODA, Zachery	5353 Ivywood Dr N	Frederick	MD	21703	(561) 685-8470
KYAW, May Thu Zar	15805 Haynes Rd	Laurel	MD	20707	(561) 685-8470
CHEN, Hai Yan	11713 Castlewood Ct	Potomac	MD	20854	(832) 322-6684
SANGLIANA, Thuzar Kyaw	5508 Hayloft Ct.	Frederick	MD	21703 - 6989	(678) 888-8838
THAN, Maung Khin	1660 Country Manor Blvd. Apt. 109B	Billings	MO	59102	(954) 881-3313
SUE, Helen	5033 SEDGEWICK DR. APT E	RALEIGH	NC	27616-4516	(678) 888-8838
SIAM, Kam Sian	2904 Windsor Meadow Ln	Mathews	NC	28105	(678) 888-8838
MOO, Eh Klu	67-2 Highland Forest Cir	Shallotte	NC	28470	(207) 632-9743
OTHIPANRANGSI, Anootsai	3035 Crescent Lake Ln	Charlotte	NC	28214	(503) 990-3830
HLA, Nang	1903 Raintree	Clovis	NM	88101	(404) 643-8676
BIK, Van Tha	1103 Utah Circle	Gallup	NM	87301 - 5417	(213) 703-4033
WAI, NweNwe	7829 Territorial St.	Las Vegas	NV	89149 - 3749	0
REIN, Myat Thu	5 Greenfield Dr.	Nashua	NV	03064	(240) 477-2069
PHAWT, Naw Ail	4450 Rio Encantado Ln.	Reno	NV	89502	(503) 990-3830
SUI, Esther	362 2nd Ave Apt #1	Albany	NY	12209	(678) 888-8838
HA, Sai Thi	185 Massachusetts Ave	Buffalo	NY	14213	(404) 643-8676
THANGTUNG, Samuel	7632 Lipizzan Rd	Oklahoma	OK	73132	(954) 881-3313
KHO, Rustum M	451 NW Yosemite Terrace	Beaverton	OR	97006	(561) 685-8470
PIANG, Kam Hau	2229 SE 171st Ave.	Portland	OR	97233	(503) 990-3830
NAULAK, Gin Pian Sang	3315 SE 167th Ave	Portland	OR	97236	(207) 632-9743
OO, Myint	12070 SW Fischer Road H203	Portland	OR	97224	(416) 606-4861
OO, Myint	12070 SW Fischer Road H203	Portland	OR	97224	(416) 606-4861
HAWNG LIAN, Melvin Ngu	637 Hillsboro St APT 8	Pittsburgh	PA	15204-1772	(954) 881-3313
HMUNG, Lai Zalian	388 Gardners Cir	Bluffton	SC	29910	(404) 643-8676
MADONGTEI, Rebecca	4650 Crescent Pointe Dr. Apt 127	North Charleston	SC	29418-3693	(207) 632-9743
MADONGTEI, Rebecca	4650 Crescent Pointe Dr. Apt 127	North Charleston	SC	29418-3693	(207) 632-9743
MANG, Thio	325 Ambrose Run Apt 316	Beaufort	SC	29906-5790	(207) 632-9743
MANG, Thio	325 Ambrose Run Apt 316	Beaufort	SC	29906-5790	(207) 632-9743
THANG, Cin Sian	7232 Ole Nottingham Dr	Antioch	TN	37013	(954) 881-3313
YANG, Hong	112 14th ST	Bristol	TN	37620	(506) 878-7131
LIN, Yen-Hsiang	3310 Alta Lane	Murfreesboro	TN	37128	(626) 863-9509
PILTUN, Ram Lin	343 Veterans PKWY	Murfreesboro	TN	37128	(503) 990-3830
SAM RA, Zau Hkun	9009 Imogene St. Apt. D	Houston	TX	77036 - 7375	(678) 888-8838
AUNG, Myat Kyipyar	1431 Cable Ranch Rd Unit 1906	San Antonio	TX	78245	(210) 322-9108
BIK, Ngun Tha	497 Prime Desert Dr	El Paso	TX	79932	(213) 703-4033
LWIN, Thein	141 Merle Dr	Newport News	VA	23602	(626) 863-9509
WIN, Kyaw Shane	20092 Old Line Ter	Ashburn	VA	20147-7493	0
Malum Khawngteng, Elijah	445 Hill Meadow Dr.	Virginia Beach	VA	23454	(207) 632-9743
AUNG, Khant Hmue	6346 Chimney Wood CT	Alexandria	VA	22306	(210) 322-9108
AUNG, Khant Hmue	6346 Chimney Wood CT	Alexandria	VA	22306	(210) 322-9108
LEE, Ngan Mee	4811 S. Graham St. Apt# E	Seattle	WA	98118	(626) 863-9509

Zenshi Food Service Counters
Terminated List
As of March 31, 2026

TUANG, Ning Khan	6616 N Addison St. Apt. B-201	Spokane	WA	99208	(954) 881-3313
DALANGGING, Mung Hkra	33317 23rd Ave. SW	Federal Way	WA	98023	0
CING, Vung Gel	111 East Graves Rd. Apt. 21	Spokane	WA	99218-1347	(832) 322-6684
THA, Van Thawng	11215 SE 267th Pl	Kent	WA	98030	(954) 881-3313
MAUNG, Ko Ko	2610 Fir Pl SE	Aurburn	WA	98092	(207) 632-9743
MAUNG, Ko Ko	2610 Fir Pl SE	Aurburn	WA	98092	(207) 632-9743
YI, Aekyung Annie	11401 58th Ave SW Apt A3	Lakewood	WA	98499	(506) 878-7131
HLA, Maung	3318 Duff Ave. Apt. 1	Cheyenne	WI	82001	(404) 643-8676

If you buy this franchise, your contact information may be disclosed to other buyers when you leave the franchise system.

Zenshi Food Service Counters
Non-Renewal List
As of March 31, 2026

StoreCode	FCName	Address	City	STATE	Zip	Phone
CAR1807	TANGBOU, Zaugun	3240 Penland Pkwy Spc 145	Anchorage	AK	99508	(907) 744-8239
SAF1663	SYMMONDS, Chong Ae	12433 W Hearn Rd	El Mirage	AZ	85335	(623) 242-4707
SAF2835	KYAW, Saw Type Pue	10201 N 44th Dr. Apt. 1127	Glendale	AZ	85302 - 2013	(520) 395-7642
ALB0961	LIAM, Biak	450 W Cool DR APT 307	Tucson	AZ	85704-6468	(970) 481-3351
SAF3066	HTIN, Yuya	131 Saint Marks Ct	Daly City	CA	94015-2159	(650) 339-5672
RLF0049	LIN, Mao Shu	4511 Elrovia Ave.	El Monte	CA	91732	(626) 698-2063
SAF1648	AUNG, Htin Lin	8777 Classical Way	Elk Grove	CA	95757	(530) 941-4538
RLF0664	TUN, Tin Myat	4400 Reeder Ave	Oxnard	CA	93033-8039	(424) 362-6573
RLF0062	TUN, Tin Myat	4400 Reeder Ave	Oxnard	CA	93033-8039	(424) 362-6573
RLF0135	SANDAR, Aye	10646 Renner St.	Riverside	CA	92505-1705	(919) 594-0396
RAY344	SAETEURN, Kao Seng	1996 Marshall Rd	Vacaville	CA	95687-5199	(707) 454-9186
PUB0484	PLEASANTS, MONTY	4385 Trevi Ct	Lake Worth	FL	33467-4084	(561) 319-6988
PUB0777	LUN, Hau Za	8542 NW 61ST St # 8542	Tamarac	FL	33321-4268	(561) 628-4822
PUB0302	LUN, Hau Za	8542 NW 61ST St # 8542	Tamarac	FL	33321-4268	(561) 628-4822
PUB0559	YAO, Shengyun	3234 Harmony Hill Trce	Kennesaw	GA	30144	(626) 716-2528
PUB1077	YAO, Shengyun	3234 Harmony Hill Trce	Kennesaw	GA	30144	(626) 716-2528
KRO0402L	ZIN, Philippo	220 Oxford Dr Apt 29	Winchester	KY	40391-1067	(770) 568-3804
SAF3136	PAU, Nang Khan	15798 S. E. Davision St. Apt. #21	Portland	OR	97236	(503) 438-8044
SAF2993	MAW, Saw Myat	11305 S.E. Harold St.	Portland	OR	97266	(971) 997-9689

If you buy this franchise, your contact information may be disclosed to other buyers when you leave the franchise system.

Zenshi Food Service Counters
Ceased Operations
As of March 31, 2026

Store Code	Store Name	Mailing Address 1	Mailing City	Mailing Stat	Mailing Zip
KRO0260A	Kroger 260	300 Deans Rd. Suite F	Auburn	AL	36830
KRO0508V	Kroger 508V	2110 Oakwood Ave NW	Huntsville	AL	35810
KRO0677V	Kroger 677V	7090 University Drive	Huntsville	AL	35806
KRO0605V	Kroger 605	4579 Wall Triana Highway	Madison	AL	35758
KRO0606V	Kroger 606V	8847 US-72 E	Madison	AL	35758
KRO0631A	Kroger 631	2450 Enterprise Dr.	Opelika	AL	36801
VO-2724	Von's 2724	3439 Via Montebello	Carlsbad	CA	92009
DRG004	Draeger's 004	4100 Black Hawk Circle	Danville	CA	94506
VO-2110	Von's 2110	715 Pier Ave.	Hermosa Beach	CA	90254
VO-2784	Von's 2784	515 West Washington Street	San Diego	CA	92103
MOL007	Mollie Stone's 7	49 42nd Ave.	San Mateo	CA	94403
SAF1792	Safeway 1792	1425 S. Murray Blvd.	Colorado Springs	CO	80916
SAF0876	Safeway 876	731 South Lemay	Fort Collins	CO	80524
SAF0862	Safeway 862	3660 S. Mason Street	Ft. Collins	CO	80525
SAF1791	Safeway 1791	1535 Main Street	Windsor	CO	80550
PUB0400	Publix 400	1500 Placida Rd Ste C	Englewood	FL	34223
PUB0322	Publix 322	1421 Sadler Rd.	Fernandina Beach	FL	32034
PUB0262	Publix 262	18496 NW 67th Ave	Hialeah	FL	33015
PUB1663	Publix 1663	10500 Ulmerton Road	Largo	FL	33771
PUB0261	Publix 261	8250 Mills Dr.	Miami	FL	33183
PUB0222	Publix 222	13890 SW 56th St.	Miami	FL	33175
PUB0305	Publix 305	5577 Park St. North	St. Petersburg	FL	33709
KRO0442A	Kroger 442A	1720 Mars Hill Road	Acworth	GA	30101
KRO0469A	Kroger 469	11895 Douglas Rd	Alpharetta	GA	30005
KRO0653A	Kroger 653	8465 Holcomb Bridge Rd.	Alpharetta	GA	30022
KRO0390A	Kroger 390A	10945 State Bridge Rd.	Alpharetta	GA	30022
KRO0415A	Kroger 415A	12460 Crabapple Rd.	Alpharetta	GA	30004
KRO0495A	Kroger 495	12870 Highway 9 N	Alpharetta	GA	30004
KRO0344A	Kroger 344A	3000 Old Alabama Rd.	Alpharetta	GA	30022
KRO0444A	Kroger 444	5665 GA HWY. 9	Alpharetta	GA	30004
KRO0618A	Kroger 618A	700 US Highway 29N	Athens	GA	30601
KRO0435A	Kroger 435A	1720 Epps Bridge Road	Athens	GA	30606
KRO0255A	Kroger 255A	2301 College Station Road	Athens	GA	30605
KRO0665A	Kroger 665A	2040 Barnett Shoals Rd.	Athens	GA	30605-3647
KRO0428A	Kroger 428A	191 Alps Road	Athens	GA	30606
KRO0318A	Kroger 318A	2205 Lavista Road	Atlanta	GA	30329
KRO0491A	Kroger 491A	3871 Peachtree Rd NE	Atlanta	GA	30319
KRO0324A	Kroger 324A	2090 Dunwoody Club Drive	Atlanta	GA	30350
KRO0462A	Kroger 462A	3030 Headland Drive SW	Atlanta	GA	30311
KRO0488A	Kroger 488A	1160 Moreland Ave SE	Atlanta	GA	30316
PUB0800	Publix 800	2562 Shallowford Rd. NE	Atlanta	GA	30345
PUB1010	Publix 1010	1380 Atlantic Dr. NW	Atlanta	GA	30363
KRO0350A	Kroger 350A	4920 Roswell Road	Atlanta	GA	30342
KRO0655A	Kroger 655A	1799 Briarcliff Rd. NE	Atlanta	GA	30306
KRO0465A	Kroger 465A	3425 Cascade Road	Atlanta	GA	30311
KRO0346A	Kroger 346A	1715 Howell Mill Rd.	Atlanta	GA	30318
KRO0364A	Kroger 364A	2685 Metropolitan Parkway	Atlanta	GA	30315
KRO0412A	Kroger 412A	590 Cascade Rd	Atlanta	GA	30310
KRO0298A	Kroger 298A	1700 Monroe Dr.	Atlanta	GA	30324
PUB0601	Publix 601	3435 Ashford Dunwoody Rd NE	Atlanta	GA	30319
KRO0672A	Kroger 672A	800 Glenwood Ave SE	Atlanta	GA	30316
KRO0695A	Kroger 695A	725 Ponce De Leon	Atlanta	GA	30308
KRO0461A	Kroger 461A	1225 Caroline Street	Atlanta	GA	30307
KRO0685A	Kroger 685A	3559 Chamblee Tucker RD	Atlanta	GA	30341
KRO0676A	Kroger 676A	2801 Washington Road	Augusta	GA	30909
KRO0664A	Kroger 664A	3942 Harper Franklin Ave	Augusta	GA	30909
KRO0641A	Kroger 641A	774 GA Highway 96	Bonaire	GA	31005
PUB0108	Publix 108	2095 Highway 211 N.W.	Braselton	GA	30517
KRO0494A	Kroger 494A	3300 Hamilton Mill Rd	Buford	GA	30519
KRO0408A	Kroger 408A	8020 Cumming Hwy	Canton	GA	30115
KRO0402A	Kroger 402A	4045 Marietta Hwy	Canton	GA	30114
KRO0680A	Kroger 680A	6766 Hickory Flat Hwy	Canton	GA	30115
KRO0367A	Kroger 367A	1355 South Park Street	Carrollton	GA	30117
KRO0629A	Kroger 629A	125 MAIN STREET MARKET PL SE	Cartersville	GA	30121
KRO0320A	Kroger 320A	1745 GA-138 SE	Conyers	GA	30013
KRO0214A	Kroger 214A	3139 US Highway 278 NE	Covington	GA	30014
KRO0436A	Kroger 436	5341 Highway 20 S	Covington	GA	30016
KRO0621A	Kroger 621	3700 Salem Rd.	Covington	GA	30016
KRO0432A	Kroger 432	2325 BETHELVIEW RD	CUMMING	GA	30040
KRO0473A	Kroger 473A	2655 Freedom Parkway	Cumming	GA	30041
KRO0486A	Kroger 486A	1595 Peachtree Parkway	Cumming	GA	30041
KRO0627A	Kroger 627A	5550 Bethelview Road	Cumming	GA	30040
KRO0457A	Kroger 457	2700 Brazelton Highway	Dacula	GA	30019
KRO0635A	Kroger 635A	505 Dacula Road	Dacula	GA	30019
KRO0673A	Kroger 673A	455 Nathan Dean Blvd	Dallas	GA	30132

Zenshi Food Service Counters
Ceased Operations
As of March 31, 2026

KRO0634A	Kroger 634A	8876 Dallas Acworth Hwy	Dallas	GA	30132
KRO0458A	Kroger 458A	1365 W. Walnut Ave.	Dalton	GA	30720
KRO0670A	Kroger 670A	378 Marketplace Parkway	Dawsonville	GA	30534
KRO0375A	Kroger 375A	2385 Wesley Chapel Rd	Decatur	GA	30035
KRO0475A	Kroger 475A	4919 Flat Shoals Pkwy	Decatur	GA	30034
KRO0459A	Kroger 459	2875 N. Decatur Rd.	Decatur	GA	30033
KRO0303A	Kroger 303A	3479 Memorial Drive	Decatur	GA	30032
KRO0485A	Kroger 485	3875 Chapel Hill Road	Douglasville	GA	30135
KRO0366A	Kroger 366A	3251 Highway 5	Douglasville	GA	30135
KRO0616A	Kroger 616A	4815 Ridge Rd	Douglasville	GA	30134
KRO0674A	Kroger 674	1100 Hillcrest Pkwy	Dublin	GA	31021
KRO0381A	Kroger 381A	3455 Peachtree Industrial Blvd.	Duluth	GA	30096
KRO0476A	Kroger 476A	6555 Sugarloaf Parkway	Duluth	GA	30097
KRO0636A	Kroger 636A	3093 Steve Reynolds Blvd.	Duluth	GA	30096
KRO0210A	Kroger 210A	4498 Chamblee Dunwoody Rd.	Dunwoody	GA	30338
KRO0414A	Kroger 414A	4355 Washington Rd.	Evans	GA	30809
KRO0490A	Kroger 490	805 Glynn St. S Suite 117	Fayetteville	GA	30214
KRO0315A	Kroger 315A	134 Banks Xing	Fayetteville	GA	30214
KRO0416A	Kroger 416A	7380 Spout Springs Rd	Flowery Branch	GA	30542
KRO0632A	Kroger 632A	4025 Winder Hwy	Flowery Branch	GA	30542
KRO0437A	Kroger 437A	3630 Thompson Bridge Rd.	Gainesville	GA	30506
KRO0682A	Kroger 682A	1931 Jesse Jewell Pkwy	Gainsville	GA	30501
KRO0480A	Kroger 480A	1911 Grayson Hwy.	Grayson	GA	30017
KRO0619A	Kroger 619A	1524 Highway 16 West	Griffin	GA	30223
KRO0644A	Kroger 644A	435 Lewiston Road	Grovetown	GA	30813
KRO0487A	Kroger 487	555 West Oglethorpe Highway	Hinesville	GA	31313
KRO0620A	Kroger 620A	115 Bill Wigington Parkway	Jasper	GA	30143
KRO0638A	Kroger 638A	1685 Old Pendergrass Rd	Jefferson	GA	30549
KRO0373A	Kroger 373A	8059 Tara Blvd.	Jonesboro	GA	30236
KRO0446A	Kroger 446A	3895 Cherokee Street NW	Kennesaw	GA	30144
PUB0455	Publix 455	1601 GA Highway 40 E	Kingsland	GA	31548
KRO0639A	Kroger 639A	1006 Martins Chapel Road	Lawrenceville	GA	30045
KRO0424A	Kroger 424	1475 Buford Drive	Lawrenceville	GA	30043
KRO0374A	Kroger 374A	2100 Riverside Pkwy	Lawrenceville	GA	30043
KRO0440A	Kroger 440A	950 Herrington Rd	Lawrenceville	GA	30044
KRO0438A	Kroger 438A	4155 Lawrenceville Hwy NW	Lilburn	GA	30047
KRO0394A	Kroger 394A	3050 Five Forks Trikum Road	Lilburn	GA	30047
KRO0376A	Kroger 376A	630 Thornton Rd	Lithia Springs	GA	30122
KRO0445A	Kroger 445A	6678 Covington Hwy	Lithonia	GA	30058
KRO0443A	Kroger 443A	910 Athens Highway	Loganville	GA	30052
KRO0679A	Kroger 679	4753 Atlanta Highway	Loganville	GA	30052
KRO0464A	Kroger 464A	4875 FLOYD ROAD SW	Mableton	GA	30126
PUB0464	Publix 464	5015 Floyd Rd.	Mableton	GA	30126
KRO0355A	Kroger 355	4650 Forsythe Road	Macon	GA	31210
KRO0378A	Kroger 378	220 Tom Hill SR. Blvd.	Macon	GA	31210
KRO0400A	Kroger 400	4321 Hartley Bridge Road	Macon	GA	31216
KRO0425A	Kroger 425	5928 Zebulan Rd.	Macon	GA	31210
PUB0155	Publix 155	1100 Johnson Ferry Rd	Marietta	GA	30068
KRO0455A	Kroger 455A	1000 Whitlock Avenue	Marietta	GA	30064
KRO0356A	Kroger 356A	3600 Dallas Highway	Marietta	GA	30064
KRO0478A	Kroger 478A	3162 Johnson Ferry Rd	Marietta	GA	30062
KRO0730A	Kroger 730A	1310 Powers Ferry Rd. SE	Marietta	GA	30067
KRO0454A	Kroger 454A	2100 Rosewell Rd.	Marietta	GA	30062
KRO0335A	Kroger 335	4880 Lower Roswell Rd.	Marietta	GA	30068
KRO0498A	Kroger 498A	1690 Powder Springs Rd SW	Marietta	GA	30064
KRO0657A	Kroger 657A	2960 Shallowford Rd.	Marietta	GA	30066
KRO0294A	Kroger 294	4115 columbia Road	Martinez	GA	30907
KRO0405A	Kroger 405A	301 Jonesboro Road	McDonough	GA	30253
KRO0633A	Kroger 633A	2000 Hwy 155 N	McDonough	GA	30253
KRO0694A	Kroger 694A	2809 North Columbia Street	Milledgeville	GA	31061
KRO0420A	Kroger 420A	3150 East Highway 34	Newnan	GA	30265
KRO0647A	Kroger 647A	1751 Newnan Crossing Blvd. E.	Newnan	GA	30265
KRO0389A	Kroger 389A	6050 Singleton Rd	Norcross	GA	30093
KRO0388A	Kroger 388A	564 Crosstown Drive	Peachtree City	GA	30269
KRO0422A	Kroger 422A	1101 N. Peachtree Pkwy.	Peachtree City	GA	30269
KRO0453A	Kroger 453A	4150 Macland Rd	Powder Springs	GA	30127
KRO0688A	Kroger 688	53 Exchange Street	Richmond Hill	GA	31324
KRO0625A	Kroger 625	461 S. Columbia Ave	Rincon	GA	31326
KRO0319A	Kroger 319A	7125 Highway 85	Riverdale	GA	30274
KRO0667A	Kroger 667A	1476 Turner McCall Blvd	Rome	GA	30161
KRO0431A	Kroger 431A	570 E Crossville Rd	Roswell	GA	30075
KRO0441A	Kroger 441A	2300 Holcomb Bridge Rd	Roswell	GA	30076
KRO0497A	Kroger 497A	900 Marietta Hwy	Roswell	GA	30075
KRO0467A	Kroger 467A	227 Sandy Springs Place NE	Sandy Springs	GA	30328
KRO0418A	Kroger 418	311 East Gwinnett St.	Savannah	GA	31401
KRO0979A	Kroger 979A	1900 E Victory Dr	Savannah	GA	31404

Zenshi Food Service Counters
Ceased Operations
As of March 31, 2026

KRO0460A	Kroger 460	7 Diamond Causeway	Savannah	GA	31406
KRO0609A	Kroger 609	495 Johnny Mercer Blvd	Savannah	GA	31410
KRO0645A	Kroger 645	5720 OGEECHEE RD.	Savannah	GA	31405
KRO0697A	Kroger 697	318 Mall Blvd	Savannah	GA	31406
KRO0699A	Kroger 699	3240 S Cobb Drive	Smyrna	GA	30080
KRO0451A	Kroger 451	4715 S Atlanta Rd SE	Smyrna	GA	30080
KRO0484A	Kroger 484	3035 Scenic Hwy S	Snellville	GA	30039
KRO0483A	Kroger 483A	1670 Highway 124	Snellville	GA	30078
KRO0493A	Kroger 493A	1750 Hudson Bridge Rd	Stockbridge	GA	30281
KRO0449A	Kroger 449A	1227 Rockbridge Rd	Stone Mountain	GA	30087
KRO0354A	Kroger 354A	1232 S Hairston Rd	Stone Mountain	GA	30088
KRO0687A	Kroger 687A	6001 Cumming HWY	Sugar Hill	GA	30518
KRO0434A	Kroger 434A	3651 Peachtree Parkway	Suwanee	GA	30024
KRO0426A	Kroger 426	400 Peachtree Industrial Blvd.	Suwanee	GA	30024
KRO0477A	Kroger 477A	2121 Lawrenceville Road	Suwanee	GA	30024
KRO0482A	Kroger 482	4357 Lawrenceville Hwy	Tucker	GA	30084
KRO0212A	Kroger 212A	3959 Lavista Rd	Tucker	GA	30084
KRO0247A	Kroger 247A	4550 Jonesboro Road	Union City	GA	30291-2080
KRO0696A	Kroger 696A	3094 Watson Blvd.	Warner Robins	GA	31093
KRO0439A	Kroger 439	1606 Memorial Dr.	Waycross	GA	31501
KRO0463A	Kroger 463A	2295 Townlake Pkwy.	Wood Stock	GA	30189
KRO0419A	Kroger 419A	12050 Highway 92 Suite 112	Woodstock	GA	30188
KRO0430A	Kroger 430A	5339 Old Hwy 5.	Woodstock	GA	30188
TFF467	Tony's Finer Foods 467	7111 W. Cermak Rd.	Berwyn	IL	60402
TFF1767	Tony's Finer Foods 1767	271 South Bolingbrook Drive	Bolingbrook	IL	60440
SCH707	Schnucks 707	109 Mattis Rd	Champaign	IL	61821
SCH747	Schnucks 747	2206 Barnes Blvd	Cherry Valley	IL	61012
TFF1167	Tony's Finer Foods 1167	5233 North Lincoln Avenue	Chicago	IL	60625
SCH753	Schnucks 753	1810 Harlem Road	Loves Park	IL	61111
TFF1567	Tony's Finer Foods 1567	1241 N. Rand Road	Prospect Heights	IL	60004
SCH750	Schnucks 750	6410 E. State Street	Rockford	IL	61108
SCH756	Schnucks 756	4860 Hononegah Rd.	Roscoe	IL	61073
SCH730	Schnucks 730	1302 Savoy Plaza Center	Savoy	IL	61874
SCH717	Schnucks 717	2801 Chatham Rd.	Springfield	IL	62704
SCH718	Schnucks 718	1911 Sangamon Ave. E	Springfield	IL	62702
SCH720	Schnucks 720	200 N Vine St	Urbana	IL	61802
SCH728	Schnucks 728	3501 N. Green River Rd.	Evansville	IN	47715
SCH742	Schnucks 742	600 E Booneville	Evansville	IN	47725
SCH704	Schnucks 704	3700 First Ave	Evansville	IN	47710
SCH705	Schnucks 705	4500 W Lloyd Expressway	Evansville	IN	47712
SCH708	Schnucks 708	5000 Washington Ave.	Evansville	IN	47715
SCH744	Schnucks 744	8301 Bell Oaks Dr.	Newburgh	IN	47630
KRO0535V	Kroger 535V	350 US 31W BYP.	Bowling Green	KY	42101
KRO0585V	Kroger 585V	2945 SCOTTSVILLE RD	Bowling Green	KY	42104
KRO0509V	Kroger 509V	711 Campbell Lane	Bowling Green	KY	42104
SCH127	Schnucks 127	3900 Vogel Road	Arnold	MO	63010
SCH173	Schnucks 173	1393 Big Bend	Ballwin	MO	63021
SCH104	Schnucks 104	8800 Manchster	Brentwood	MO	63144
SCH142	Schnucks 142	1060 Woodsmill Plaza	Chesterfield	MO	63017
SCH174	Schnucks 174	2511 Kehrs Mill Rd	Chesterfield	MO	63017
SCH133	Schnucks 133	141 Hilltown Village	Chesterfield	MO	63017
SCH714	Schnucks 714	1400 Forum Blvd.	Columbia	MO	65203
SCH124	Schnuck's 124	6083 Mid Rivers Mall Dr.	Cottleville	MO	63304
SCH116	Schnucks 116	12756 Olive Street Rd.	Creve Coeur	MO	63141
SCH213	Schnucks 213	7909 Highway N	Dardenne Prairie	MO	63368
SCH209	Schnucks 209	12332 Manchester Road	Des Peres	MO	63131
SCH196	Schnucks 196	245 East 5th St.	Eureka	MO	63025
SCH731	Schnucks 731	1181 Gannon Plaza	Festus	MO	63028
SCH726	Schnucks 726	1801 Missouri Blvd.	Jefferson City	MO	65109
SCH188	Schnucks 188	8867 Ladue Rd	Ladue	MO	63124
SCH180	Schnucks 180	10275 Clayton Rd.	Ladue	MO	63124
SCH135	Schnucks 135	101 Civic Center Dr.	Lake St Louis	MO	63367
SCH225	Schnucks 225	7355 Manchester Road	Maplewood	MO	63143
SCH117	Schnucks 117	2030 Dorsett Rd.	Maryland Heights	MO	63043
SCH118	Schnucks 118	5519 Oakville Shopping Center	Oakville	MO	63129
SCH272	Schnucks 272	6600 Clayton Rd.	Richmond Heights	MO	63117
SCH219	Schnucks 219	3740 Monticello Plaza Dr	Saint Charles	MO	63304
SCH228	Schnucks 228	60 Harvester Sq	Saint Charles	MO	63303
SCH193	Schnucks 193	5434 Southfield Ctr	Saint Louis	MO	63123
SCH176	Schnucks 176	1900 First Capital Dr.	St. Charles	MO	63301
SCH102	Schnucks 102	10650 Olive Blvd	St. Louis	MO	63141
SCH227	Schnucks 227	4171 Lindell Blvd	St. Louis	MO	63108
SCH105	Schnucks 105	4333 Butler Hill Road	St. Louis	MO	63128
SCH192	Schnucks 192	1020 Loughborough	St. Louis	MO	63111
SCH301	Schnucks 301	315 N. 9th St.	St. Louis	MO	63101
SCH149	Schnucks 149	5055 Arsenal	St. Louis	MO	63139

Zenshi Food Service Counters
Ceased Operations
As of March 31, 2026

SCH258	Schnucks 258	60 Hampton Village Plaza	St. Louis	MO	63109
SCH136	Schnucks 136	8650 Big Bend Blvd.	St. Louis	MO	63119
BRG002	Brooks Grocery 2	1661 N Coley Rd.	Tupelo	MS	38801
HT-174	Harris Teeter 174	5706 Wyalong Dr.	Charlotte	NC	28227
TOP0227	Tops Market 227	9660 TRANSIT ROAD	AMHERST	NY	14051
TOP0239	Tops Market 239	1740 SHERIDAN DRIVE	BUFFALO	NY	14223
TOP0268	Tops Market 268	6914 ERIE ROAD	Derby	NY	14047
TOP0118	Tops Market 118	65 GREY STREET	EAST AURORA	NY	14052
TOP0119	Tops Market 119	2140 Grand Island Blvd	Grand Island	NY	14072
TOP0236	Tops Market 236	6150 SOUTH PARK AVE	HAMBURG	NY	14075
TOP0115	Tops Market 115	906 Center Street	Lewiston	NY	14902
TOP0011	Tops Market 11	5827 S Transit Road	Lockport	NY	14094
TOP0022	Tops Market 22	7200 Niagara Falls Blvd	Niagara Falls	NY	14304
KRO0675A	Kroger 675A	1795 Whiskey Rd	Aiken	SC	29803
KRO0640A	Kroger 640A	1284 Knox Ave	Augusta	SC	29841
KRO0703A	Kroger 703A	27 Discovery Drive	Bluffton	SC	29910
KRO0499A	Kroger 499	125 Towne Dr.	Bluffton	SC	29910
KRO0678A	Kroger 678	1028 Roberts Branch Pkwy	Columbia	SC	29203
KRO0448A	Kroger 448A	10136 Two Notch Road	Columbia	SC	29229
PUB0459	Publix 459	208 Saint James Ave Ste C	Goose Creek	SC	29445
KRO0671A	Kroger 671A	42 Shelter Cove Lane	Hilton Head	SC	29928
KRO0002A	Kroger 002	7467 St. Andrews Rd. .	Irmo	SC	29063
HT-450	Harris Teeter 450	1981 Riviera Dr	Mt Pleasant	SC	29464
KRO0026A	Kroger 026	3735 Renee Drive SC	Myrtle Beach	SC	29579
KRO0520V	Kroger 520V	5319 Mt. View Road	Antioch	TN	37013
KRO0596V	Kroger 596V	210 Franklin Road	Brentwood	TN	37027
KRO0589V	Kroger 589	6690 Nolensville Pike	Brentwood	TN	37027
KRO0544V	Kroger 544	1489 Madison Street	Clarksville	TN	37042
KRO0540V	Kroger 540V	2100 Lowes Drive	Clarksville	TN	37040
KRO0538V	Kroger 538V	845 Nashville Highway	Columbia	TN	38401
KRO0507V	Kroger 507V	1202 S James Campbell Blvd	Columbia	TN	38401
KRO0523V	Kroger 523V	143 Henslee Drive	Dickson	TN	37055
KRO0526V	Kroger 526V	2020 Mallory Lane	Franklin	TN	37067
KRO0592V	Kroger 592V	1203 Murfreesboro Road	Franklin	TN	37064
KRO0568V	Kroger 568V	411 Whitman Road	Franklin	TN	37064
KRO0570V	Kroger 570V	3054 Columbia Ave	Franklin	TN	37064
KRO0576V	Kroger 576V	305 INDEPENDENCE SQ	Franklin	TN	37064
KRO0569V	Kroger 569V	2011 Nashville Pike	Gallatin	TN	37066
KRO0541V	Kroger 541V	123 Northcreek Blvd	Goodlettsville	TN	37072
KRO0571V	Kroger 571V	1010 Glenbrook Way	Hendersonville	TN	37075
KRO0518V	Kroger 518	5544 Old Hickory Road	Hermitage	TN	37076
KRO0866V	Kroger 866V	4400 Lebanon Pike	Hermitage	TN	37076
KRO0565V	Kroger 565V	4432 Veterans Parkway	Murfreesboro	TN	37128
KRO0532V	Kroger 532V	2449 OLD FORT PKWY	Murfreesboro	TN	37128
KRO0529V	Kroger 529V	1776 W Northfield Blvd	Murfreesboro	TN	37129
KRO0539V	Kroger 539V	2325 MEMORIAL BLVD	Murfreesboro	TN	37129
KRO0564V	Kroger 564	2050 Lascassas Pike	Murfreesboro	TN	37130
KRO0543V	Kroger 543V	2946 SOUTH CHURCH STREET	Murfreesboro	TN	37127
KRO0527V	Kroger 527V	7087 Hwy 70 South	Nashville	TN	37221
KRO0550V	Kroger 550V	8141 Hwy. 100	Nashville	TN	37221
KRO0542V	Kroger 542V	61 E Thompson Ln	Nashville	TN	37211
KRO0502V	Kroger 502V	800 Monroe Street	Nashville	TN	37208
KRO0574V	Kroger 574V	2284 MURFREESBORO PK	Nashville	TN	37217
KRO0845V	Kroger 845V	143 McGavock Pk	Nashville	TN	37214
KRO0537V	Kroger 537V	5713 Edmondson Pike	Nashville	TN	37211
KRO0851V	Kroger 851V	5771 Nolensville Pike	Nashville	TN	37211
KRO0511V	Kroger 511V	2615 Franklin Pike	Nashville	TN	37204
KRO0895V	Kroger 895V	2131 Abbott Martin Rd.	Nashville	TN	37215
KRO0884V	Kroger 884V	3410 Gallatin Road	Nashville	TN	37216
KRO0880V	Kroger 880V	711 Gallatin Road	Nashville	TN	37206
KRO0547V	Kroger 547V	5705 Charlotte Pike	Nashville	TN	37209
KRO0567V	Kroger 567V	2201 21st Ave South	Nashville	TN	37212
KRO0559V	Kroger 559V	1010 N. Main Street	Shelbyville	TN	37160
KRO0553V	Kroger 553	463 Sam Ridley Pkwy West	Smyrna	TN	37167
KRO0594V	Kroger 594V	4900 Port Royal Road	Spring Hill	TN	37174
KRO0575V	Kroger 575V	2600 Memorial Blvd	Springfield	TN	37172
KRO0588V	Kroger 588V	4726 Traders Way	Thompsons Station	TN	37179
KRO0545V	Kroger 545V	510 TN-76E	White House	TN	37188
UNI574	United Market 574	2160 Pine Street	Abilene	TX	79601
RAN1041	Randalls 1041 Kosher	4800 West Bellfort St.	Houston	TX	77035
UNI552	United Market 552	6321 4th Street	Lubbock	TX	79416
UNI555	United 555	12815 Indiana Ave	Lubbock	TX	79423
UNI543	United 543 Market Street	4205 98th Street	Lubbock	TX	79423
HT-262	Harris Teeter 262	3600 Glebe Rd.	Arlington	VA	22202

If you buy this franchise, your contact information may be disclosed to other buyers when you leave the franchise system.

AFC Food Service Counters
Franchise List
As of March 31, 2026

Operator Name	Mailing Address 1	Mailing City	Mailing State	Mailing Zip	Phone Number
THONKRATOK, Somchai	3200 Providence Dr.	Anchorage	AK	99508	(907) 562-2211
MACAPINLAC, Jessel Co	11409 Business Park Boulevard	Eagle River	AK	99577	907.696.9400
OO, Myo Thein	1802 6th Avenue	Birmingham	AL	35249	(205) 996-2719
DIM, No Sawn	1800 Honda Drive	Lincoln	AL	35096	(205) 355-5000
KHAN, Pau Za	5 Mobile Infirmary Cirlce	Mobile	AL	36607	(251) 435-2400
MARIP, Seng Lum	9601 Baptist Way	Little Rock	AR	72205	(501) 202-2200
PAU, Zam Suan	21064 W. Main St.	Buckeye	AZ	85396	(623) 388-6000
MYINT, Khin Maung	650 W Finnie Flat Rd	Camp Verde	AZ	86322	(928) 567-4585
PEI, Sin	36889 Tom Darlington	Carefree	AZ	85377	(480) 488-1797
CHIT, Ye Naing	1955 W Fry Road	Chandler	AZ	85224	(480) 728-3000
THAWNG, Bawi Nun	2700 S. Woodlands Village Blvd.	Flagstaff	AZ	86001	(928) 774-3882
MUT, Aisha Destiny	1200 N. Beaver Street	Flagstaff	AZ	86001	(928) 779-3366
TIN, Samuel	1900 N Higley Rd.	Gilbert	AZ	85234	
KHAING, Aung Kyaw	5555 W. Thunderbird Rd	Glendale	AZ	85306	(602) 865-5555
MYINT, Wah Wah	5311 S Superstition Mtn. Drive	Gold Canyon	AZ	85118	(480) 474-9401
THEIN, Shwe	3269 Maricopa Ave	Lake Havasu City	AZ	86406	(928) 854-9550
CHO, Jeongae	1122 North Higley Road	Mesa	AZ	85205	(480) 396-8098
CHO, Jeongae	1133 N. Ellsworth Road	Mesa	AZ	85207	(480) 357-3300
MON, Brenda	1400 S Dobson Rd	Mesa	AZ	85202	(480) 412-3000
MAUNG, Win Htwe	2864 N Power Road	Mesa	AZ	85215	(480) 830-7900
PHAY, Tun	5521 N 7th St	Phoenix	AZ	85014	(602) 222-1820
OO, Khin Thida	9020 W. Thomas Road	Phoenix	AZ	85037	(623) 872-6200
Weerasa, Sayun	350 W. Thomas Road	Phoenix	AZ	85013	(602) 406-3000
TUN, Myo	1919 E Thomas Road	Phoenix	AZ	85016	(602) 933-1000
PI, Piang	1111 E. McDowell Rd	Phoenix	AZ	85006	(602) 839-2000
LIAN, Pau Suan	9201 W Thomas Rd	Phoenix	AZ	85037	(623) 327-4000
SOE, Yee Yee	10631 N. 32nd Street	Phoenix	AZ	85028	(602) 996-1040
SOE, Yee Yee	731 E. Union Hills Dr	Phoenix	AZ	85024	(602) 652-9520
MAUNG, Win Htwe	23760 S.Power Rd	Queen Creek	AZ	85142	(480) 279-5700
SOE, Yin Min	8035 E. Indian School Road	Scottsdale	AZ	85251	(480) 946-6821
Saw Ju, Saw Min	8423 E. McDonald Drive	Scottsdale	AZ	85250	(480) 948-8110
Saw Ju, Saw Min	10111 E. Bell Road	Scottsdale	AZ	85260	(480) 563-0624
MYINT, Khin Maung	100 Verde Valley School Road	Sedona	AZ	86351	(928) 284-2202
THANT, Phyo	160 Coffee Pot Drive	Sedona	AZ	86336	(928) 282-5351
PAU, Zam Suan	10401 W. Thunderbird Blvd	Sun City	AZ	85351	(623) 524-4000
LAL, Paul Thawng Khau	14502 W. Meeker Blvd	Sun City	AZ	85375	(623) 524-4000
MAUNG, Win Htwe	10325 E. Riggs Rd	Sun Lakes	AZ	85248	(480) 802-7180
PIANG, Pau Sian	15310 N. Oracle Road	Tucson	AZ	85739	(520) 575-7300
WIN, Samuel	6900 E Sunrise Dr	Tucson	AZ	85750	(520) 299-0633
THI, Myat Kay	1625 N. Campbell Ave	Tucson	AZ	85724	(520) 694-8888
KHAM, Thawng Cin	5301 E Grant Road	Tuscon	AZ	85712	(520) 324-5220
PARK, Jae Hyeon	2652 Jamacha Rd	El Cajon	CA	92019	(619) 670-0101
YOUNG, Hyon Suk	5727 Kanan Rd	Agoura Hills	CA	91301	(818) 889-5429
FAN, Kevin	2531 Blanding Ave	Alameda	CA	94501	(510) 814-8800
LEE, Molly	2531 Blanding Ave.	Alameda	CA	94501	(510) 814-8800
AYE, Kim H.	26901 Aliso Creek Road	Aliso Viejo	CA	92656	(949) 362-3727
LI, Yi Nan	915 S. Brookhurst	Anaheim	CA	92804	(714) 635-3670
HEIN, Win Moe	6901 Eastern Avenue	Bell Gardens	CA	90201	(323) 771-2003
MARAN, Zau Seng	890 Southampton Rd.	Benicia	CA	94510	(707) 746-1203
AUNG, Than Htike	42150 Washington Street	Bermuda Dunes	CA	92203	(760) 200-0272
LIN, Nathan	305 W. Imperial Hwy	Brea	CA	92821	(714) 529-4505
HLAING, Aye Min Min	25 E Alameda Ave	Burbank	CA	91502	(818) 556-1558
KIM, Yunhee	1100 N San Fernando Blvd	Burbank	CA	91504	(818) 845-6424
LIN, Chuck Shin	2600 W. Victory Blvd.	Burbank	CA	91505	(818) 845-5914
CHUNG, Chan Hung	4754 Commons Way	Calabasas	CA	91302	(818) 223-0284
LWIN, Soe Myint	674 Las Posas	Camarillo	CA	93010	(805) 388-1781
TOO, Naw M	1602 W. Campbell Ave.	Campbell	CA	95008	(408) 379-6650
GI, James	22333 Sherman Way	Canoga Park	CA	91303	(818) 883-1230
KO, Sam Sai	19340 Sloedad Canyon Rd	Canyon Country	CA	91351	(661) 252-6226
CHOI, Chang Won	809 Bay Ave.	Capitola	CA	95010	(831) 476-5600
ZEINALI, Namsoon	7140 Avenida Encinas	Carlsbad	CA	92011	(760) 431-1060
SOE, Thandar	29675 The Old Road	Castaic	CA	91384	(661) 702-6911

AFC Food Service Counters
Franchise List
As of March 31, 2026

Operator Name	Mailing Address 1	Mailing City	Mailing State	Mailing Zip	Phone Number
KIM, Taeho	13321 South St.	Cerritos	CA	90701	(562) 860-5635
CHAROENSUK, Opat	21431 Devonshire St.	Chatsworth	CA	91311	(818) 341-0950
PAING, Kaung Khant	211 West East Ave.	Chico	CA	95926	(530) 899-3300
KIM, Daniel Jun	659 E. Palomar St.	Chula Vista	CA	91911	(619) 397-0019
KIM, Erica Jinju	780 Otay Lakes Rd	Chula Vista	CA	91910	(619) 421-4822
DENG, Xiaolong	12660 Limonite Ave	Corona	CA	92880	(951) 734-1087
WINSWE, Hanmuyar	380 E. 17th Street	Costa Mesa	CA	92627	(949) 631-7357
SIRIYAKUL, Eirawat	3827 Culver Ctr	Culver City	CA	90232	(310) 558-4027
FELIX, Eka	10772 Jefferson Blvd	Culver City	CA	90230	(310) 839-4107
THEIN, Han	4033 Ball Rd.	Cypress	CA	90630	(714) 827-7947
YI, Kyawt Wutt	24871 Del Prado	Dana Point	CA	92629	(949) 661-4145
SAW, Joseph	32555 Golden Lantern	Dana Point	CA	92629	(949) 661-6334
KIM, Un H.	9200 Lakewood Blvd	Downey	CA	90240	(562) 869-2042
YI, Kristen Hee Jung	500 N Sepulveda Blvd	El Segundo	CA	90245	(310) 615-0537
HTAY, May Than	3360 San Pablo Dam Road	EL SOBRANTE	CA	94803	(510) 222-5935
VANG, Alexander B. Chue	5100 Laguna Blvd.	Elk Grove	CA	95758	(916) 684-7000
CHAW, Akar	9435 Elk Grove Blvd.	Elk Grove	CA	95624	(916) 714-6996
XIE, Yuhong	4900 Elk Grove Blvd	Elk Grove	CA	95757	(916) 683-0700
TUN, Pyae Phyo	8425 Elk Grove-Florin Rd.	Elk Grove	CA	95624	(916) 681-5775
CHANG, Chia Lin	4900 Elk Grove Blvd	Elk Grove	CA	95758	(916) 683-0700
BYUN, Sue H	125 N. El Camino Real	Encinitas	CA	92024	(760) 942-5472
MO, Wei Lan	17840 Ventura Blvd.	Encino	CA	91316	(818) 345-6882
MAWI, Elizabeth	2417 E Valley Pkwy	Escondido	CA	92027	(760) 740-0334
LIU, Xiuxian	16225 Sierra Lakes Pkwy	Fontana	CA	92336	(909) 357-1380
SONG, Min Soo	26751 Portola Pkwy	Foothill Ranch	CA	92610	(949) 457-9349
KIM, Jin Young	18405 Brookhurst St.	Fountain Valley	CA	92708	(714) 964-7566
AUNG, Mung Myat	39200 Paseo Padre Parkway,	Fremont	CA	94538	(510) 791-0233
PARK, Hye Jin	3330 Yorba Linda Blvd	Fullerton	CA	92831	(818) 548-0584
LIN, Nathan	1121 N Harbor Blvd	Fullerton	CA	92832	(714) 992-2591
ZHU, Yue Hong	10430 Twin Cities Rd.	Galt	CA	95632	(209) 745-4668
AUNG, Saw M.	10430 Twin Cities Rd	Galt	CA	95632	(209) 745-4668
LWIN, Maung	12051 Euclid Ave	Garden Grove	CA	92840	(714) 636-6526
WIN, Si Thu	2201 W Redondo Beach Blvd	Gardena	CA	90247	(310) 538-9008
JUNG, Gordon	777 First St.	Gilroy	CA	95020	(408) 847-4857
CHAE, Chang Hoon	1416 E Colorado St.	Glendale	CA	91205	(818) 548-0945
HONG, Soo Hee	1200 N. Central Ave.	Glendale	CA	91202	(818) 246-1752
JEON, Samuel Jiwoong	211 N Glendale Ave	Glendale	CA	91202	(818) 549-0035
WIN, John	5170 Hollister Ave	Goleta	CA	93111	(805) 692-0022
NAING, Toe	18010 Chatsworth St.	Granada Hills	CA	91344	(818) 831-6556
AUNG, Tin Htun	16940 Devonshire St.	Granada Hills	CA	91344	(818) 363-3173
SAN, REBECCA	11873 S. Hawthorne Blvd	Hawthorne	CA	90250	(310) 679-9164
OO, Ne Tun	1700 Airline Hwy	Hollister	CA	95023	(831) 637-7447
SOE, Phyo Lin	5241 Warner Ave	Huntington Beach	CA	92649	(714) 377-0024
PARK, Il Min	19081 Goldenwest	Huntington Beach	CA	92648	(714) 960-8756
WIN, Nyan Soe	6920 Santa Fe Ave.	Huntington Park	CA	90255	(323) 585-6430
SAN, Thi Thi	49908 Jefferson Street	Indio	CA	92201	(760) 771-4373
LEE, Yeanyong	17605 Harvard Ave	Irvine	CA	92614-8544	(949) 851-3161
LAY, Tint Lei	14400 Culver Drive	Irvine	CA	92604	(649) 552-3065
KIM, Mi Sook	6300 Irvine Blvd	Irvine	CA	92620	(949) 559-1139
SONG, Chung Eu	5345 Alton Parkway	Irvine	CA	92604	(949) 552-0597
HMUNG, Bawi	521 W. Foothill Blvd.	La Canada	CA	91011	(818) 790-0584
CHANG, Danny Yun Ping	2675 Foothill Blvd	La Crescenta	CA	91214	(818) 249-5448
LEE, Eunjin	8657 Villa La Jolla Drive	La Jolla	CA	92037	(858) 597-1550
MOE, Sanda	700 S Coast Highway	Laguna Beach	CA	92651	(949) 497-6410
WANG, Yaping	25539 Paseo De Valencia	Laguna Hills	CA	92653	(949) 951-0966
CHO, Jimmy	28231 Crown Valley Pkwy	Laguna Niguel	CA	92677	(949) 831-0767
Tan, Weiye	21751 Lake Forest Dr	Lake Forest	CA	92630	(949) 855-1242
SUN, Mingtian	23716 El Toro Rd.	Lake Forest	CA	92630	(949) 380-0179
CHEN, Tyng Ru J	5951 Del Amo Blvd	Lakewood	CA	90713	(562) 867-7282
XU, Xiuxiu	1930 Lakewood Blvd	Long Beach	CA	90815	(562) 494-4371
SHIN, Jung Min	2930 E 4th St.	Long Beach	CA	90814	(562) 434-3899
CHEN, Tyng Ru J	2250 E Carson St	Long Beach	CA	90807	(562) 424-2012

AFC Food Service Counters
Franchise List
As of March 31, 2026

Operator Name	Mailing Address 1	Mailing City	Mailing State	Mailing Zip	Phone Number
KIM, Tae Yub	6290 E. Pacific Cst Hwy	Long Beach	CA	90803	(562) 795-0167
TUN, Jefferson William	8825 S Sepulveda Blvd	Los Angeles	CA	90045	(310) 645-2035
CHANG, Se Ho	11361 National Blvd	Los Angeles	CA	90064	(310) 479-4351
PARTINAH, Partinah	10309 W. Olympic Blvd.	Los Angeles	CA	90064	(310) 553-8117
HE, Trinity Ying	4760 W Pico Blvd	Los Angeles	CA	90019	(323) 937-4107
MUALIMAH, Mualimah	7257 W Sunset Blvd	Los Angeles	CA	90046	(323) 512-8382
YINT, Nay Ye	1820 W. Slauson	Los Angeles	CA	90047	(323) 293-1369
AUNG, Zaw Myo	5601 Wilshire Blvd.	Los Angeles	CA	90036	(323) 936-4954
AUNG, Zaw Myo	10861 Weyburn Ave	Los Angeles	CA	90024	(310) 824-5994
HONG, James Kee	1111 S.Figueroa Street	Los Angeles	CA	90015	(213) 742-7825
KANG, MyungHye	5429 Hollywood Blvd	Los Angeles	CA	90027	(323) 957-9657
LIN, Jiabin	5080 Rodeo Rd	Los Angeles	CA	90016	(323) 292-0633
LINN, Saw Simon	670 S. Western Ave	Los Angeles	CA	90005	(213) 383-5058
YOO, Mina	11727 Olympic Blvd.	Los Angeles	CA	90064	(310) 473-5238
YOON, Haejin	8701 Lincoln Blvd	Los Angeles	CA	90045	(310) 649-1526
AUNG, Sithu	1700 W. 6th St.	Los Angeles	CA	90017	(213) 353-0920
AUNG, Sithu	3410 W 3rd St.	Los Angeles	CA	90020	(213) 480-1421
KO, Ui Seok	645 West 9th Street	Los Angeles	CA	90015	(213) 452-0840
SHEN, Weichen	12057 Wilshire Blvd	Los Angeles	CA	90025	(310) 477-8746
LAO, Bunsong	5245 West Centinela Avenue	Los Angeles	CA	90045	(310) 641-2813
THEIN, Win Papa	260 S. La Brea Ave	Los Angeles	CA	90036	(323) 937-3264
WIN, Si Thu	1730 W Manchester Ave	Los Angeles	CA	90047	(323) 750-3151
ZAW, Wunna	2600 S. Vermont Ave.	Los Angeles	CA	90007	(323) 732-3863
YI, Eun San	21909 Ventura Blvd	Los Angeles	CA	91364	(818) 883-1907
BLOI , Sanone	1240 Los Osos Valley Rd	Los Osos	CA	93402	(805) 528-0112
DONG, Ziyi	23841 W. Malibu Road	Malibu	CA	90265	(310) 456-2917
PARK, Byunghoon	2700 N Sepulveda Blvd	Manhattan Beach	CA	90266	(310) 546-2472
AYE, Nay Myint	1280 Lathrop Rd.	Manteca	CA	95336	(209) 825-0242
KOH, Hyun Joo	4311 Lincoln Blvd.	Marina Del Rey	CA	90292	(310) 574-0909
KIM, Byung Lae	4700 Admiralty Way	Marina Del Rey	CA	90292	(310) 823-4684
WIN, Nyo Nyo	520 Center Ave.	Martinez	CA	94553	(925) 370-9400
BANTHAO, Pornphet Ricky	30125 Antelope Rd.	Menifee	CA	92584	(951) 679-2117
THANTINT, Maung	3550 North G Street,	Merced	CA	95340	(209) 722-3689
THU, Nay Myo	21088 Calistoga Rd.	Middletown	CA	95461	(707) 987-3020
PHAN, Phuoc Hong	25104 Marguerite Parkway	Mission Viejo	CA	92692	(949) 830-3066
Tan, Weiye	27730 Santa Margarita Pkwy	Mission Viejo	CA	92691	(949) 837-0380
HORN, Chanthea	3020 Floyd Avenue	Modesto	CA	95355	(209) 551-2050
WAHYUNI, Sri	2230 South Atlantic Blvd.	Monterey Park	CA	91754	(323) 721-3367
LYU, Fang	330 North Atlantic Blvd.	Monterey Park	CA	91754	(626) 289-0261
CHAE, Min Chul	101 W. Los Angeles Ave.	Moorpark	CA	93021	(805) 529-1604
TUN, Aung Kyaw	451 Vineyard Town Center	Morgan Hill	CA	95037	(408) 779-8485
HTWE, Ni Ni	1250 Grant Road	Mountain View	CA	94040	(650) 390-9222
LIAN, Cung Thawng	23801 Washington Ave.	Murrieta	CA	92562	(951) 677-2297
HTOO, Saw Sar	611 Trancas Street,	Napa	CA	94558	(707) 224-8583
MARAN, Zau Seng	217 Soscol Ave.	Napa	CA	94559	(707) 224-7897
LWIN, Soe Myint	583 N Ventu Park Rd	Newbury ParK	CA	91320	(805) 499-6743
Tun, Aik	1945 N Street,	Newman	CA	95360	(209) 862-1002
AUNG, Ye Htut	2555 East Bluff Drive	Newport Beach	CA	92660	(949) 644-2060
WINSWE, Hanmuyar	1150 Irvine Ave	Newport Beach	CA	92660	(949) 646-1411
HLAING, Aye Min Min	10900 Magnolia Blvd	North Hollywood	CA	91601	(818) 760-4148
GI, James	19781 Rinaldi St.	Northridge	CA	91326	(818) 832-5955
AUNG, Maung Aye Tun	40041 Highway 49	Oakhurst	CA	93644	(559) 683-8300
CI, John Lal	101 Old Grove Road	Oceanside	CA	92057	(760) 754-1035
ZHANG, Tingrui	3075 S. Archibald Bldg	Ontario	CA	91761	(909) 947-1884
SHI, Long	1435 W. Chapman Ave	Orange	CA	92868	(714) 634-2905
KHINE, Aung	101 The City Dr.	Orange	CA	92868	(714) 319-2896
LOR, Vee Chai	2325 Meyers Street.	Oroville	CA	95966	(530) 533-2515
MOE, Myat Kaung	250 W. Esplanade Dr	Oxnard	CA	93036	(805) 288-8686
CHEN, Xiangxi	74884 Country Club Drive	Palm Desert	CA	92260	(760) 776-9821
HTOI, Hkawn	425 S Sunrise Way Ste A	Palm Springs	CA	92262	(760) 327-4370
DONKAEW, Thawthawmoo	1733 E Palm Canyon Dr.	Palm Springs	CA	92264	(760) 325-5664
KYI, Tin Thidar	160 N Lake Ave	Pasadena	CA	91101	(626) 793-7480

AFC Food Service Counters
Franchise List
As of March 31, 2026

Operator Name	Mailing Address 1	Mailing City	Mailing State	Mailing Zip	Phone Number
LEE, Brandon Hyon	3601 E Foothill Blvd	Pasadena	CA	91107	(626) 351-8806
LWIN, San	320 W Colorado Blvd.	Pasadena	CA	91105	(626) 793-4179
SAN, Tin	5420 Sunol Blvd	Pleasanton	CA	94566	(925) 846-4471
LI, Yiyi	7243 Haven Ave	Rancho Cucamonga	CA	91701	(909) 944-4838
MYINT, Kyi	7369 Miliken Ave	Rancho Cucamonga	CA	91730	(909) 944-4827
SU, Zhiling	12201 Highland Ave	Rancho Cucamonga	CA	91739	(909) 646-9356
TUN, Yarzar	30019 Hawthorne Blvd	Rancho Palos Verdes	CA	90275	(310) 377-6941
LE, Khanh Mai	31481 S. Margarite Pkwy	Rancho Santa Margar	CA	92688	(949) 589-0156
PAING, Kaung Khant	725 S. Main st.	Red Bluff	CA	96080	(530) 527-6902
MIN, Thet	201 Lake Blvd.	Redding	CA	96003	(530) 246-3508
CUNG, Sang	1413 Hawthorne Blvd	Redondo Beach	CA	90278	(310) 370-9446
LAM, Hae Hyoung Joo	270 Redwood Shore Pkwy	Redwood city	CA	94065	(650) 654-2106
NGANG, Zin Lar	5225 Canyon Crest Dr	Riverside	CA	92507	(951) 784-3123
BAIK, Eunice Eun Mi	3350 LA Sierra Ave	Riverside	CA	92503	(951) 637-1948
Park, Heesun	100 Raley's Town Center	Rohnert Park	CA	94928	(707) 585-3222
CHEN, Siyin	1540 West El Camino	Sacramento	CA	95833	(916) 920-2493
TWAY, Tin Tin	4690 Freeport Blvd	Sacramento	CA	95822	(916) 451-0126
LIAN, John Khawi	4650 Natomas Blvd.	Sacramento	CA	95835	(916) 419-6633
CHANG, Chia Lin	7465 Rush River Dr.	Sacramento	CA	95831	(916) 399-9091
HTET, Kyaw Min	1301 Florin rd.	Sacramento	CA	95831	(916) 421-6766
LWIN, Yuki S	1540 West El Camino	Sacramento	CA	95833	(916) 920-2493
LWIN, Yuki S	3250 Arena Blvd.	Sacramento	CA	95834	(916) 419-8844
LI, Yong Huo	7465 Rush River Dr.	Sacramento	CA	95831	(916) 399-9091
MIN, Min	1320 South Main St.	Salinas	CA	93901	(831) 758-8481
LI, Yiyi	4444 University Pkwy	San Bernadino	CA	92407	(909) 880-2253
CI, John Lal	811 Avenida Talega	San Clemente	CA	92673	(949) 492-1648
SAW, Joseph	903 S El Camino Real	San Clemente	CA	92672	(949) 361-8729
UK, Bual Hre	101 G Street	San Diego	CA	92101	(619) 595-1581
ZI, Si Tin	3345 Sports Arena Blvd	San Diego	CA	92110	(619) 222-0688
SHING, Tang	6670 Montezuma Rd	San Diego	CA	92115	(619) 463-8893
LIAN, Lal Ceu	1666 Rosecrans St.	San Diego	CA	92106	(619) 819-6040
KANG, Rachel Hyunsoon	3455 Del Mar Heights Rd	San Diego	CA	92130	(858) 259-1077
ZI, Lidia Nguntha	10525 S Commons Drive	San Diego	CA	92127	(858) 675-0196
CHO, YONG JOON	1030 University Ave	San Diego	CA	92103	(619) 298-2931
YOON, Young Sook	4315 Mission Blvd.	San Diego	CA	92109	(858) 273-0778
SOE, Myat Hnin	3011 Alta View Drive	San Diego	CA	92139	(619) 470-0574
WIN, Khin Mar	11875 Carmel Mountain Road	San Diego	CA	92128	(858) 451-8376
KIM, Sung Soo	5680 Mission Center Rd.	San Diego	CA	92108	(619) 297-2593
WIN, Aung Soe	1421 Foxworthy	San Jose	CA	95118	(408) 264-0103
LIN, San	1970 Naglee Ave.	San Jose	CA	95126	(408) 294-9151
AUNG, Aye Thiri Myo	6061 Snell Ave.,	San Jose	CA	95123	(408) 225-0546
BLOI , Sanone	201 Madonna Rd	San Luis Obispo	CA	93405	(805) 546-0407
KANG, Hunsuk	306 Twin Oaks Valley Road	San Marcos	CA	92078	(760) 891-0607
WIN, John	100 W Carrillo St	Santa Barbara	CA	93101	(805) 564-7000
LEE, Amanda Raelene	3555 Monroe Street	Santa Clara	CA	95051	(408) 557-0115
GURBAZAR, Bolortuya	1644 Cloverfield Blvd	Santa Monica	CA	90404	(310) 582-3900
AYE, May Saw	1465 Town and Country Dr.	Santa Rosa	CA	95404	(707) 546-3663
KIM, Younghee	222 Mt. Herman Rd.	Scotts Valley	CA	95066	(831) 438-1610
YIN, Zhesheng	12470 Seal Beach Blvd.	Seal Beach	CA	90740	(562) 598-3128
SANG, Esther	14440 Burbank Blvd	Sherman Oaks	CA	91401	(818) 989-5640
AUNG, Hnin Sandar	14049 Ventura Blvd	Sherman Oaks	CA	91423	(747) 233-6100
AUNG, Tin Htun	2726 E Los Angeles Ave	Simi Valley	CA	93065	(805) 527-1122
LWIN, San	1745 Garfield Ave	South Pasadena	CA	91030	(626) 799-5790
PYAE, Eaint Chan	24975 Pico Canyon Rd.	Stevenson Ranch	CA	91381	(661) 253-0656
WUN, Min Chan	4255 Morada Lane	Stockton	CA	95212	(209) 956-9300
HAN, Ki C	12842 Ventura Blvd	Studio City	CA	91604	(818) 761-6196
SENHRANG, Phunhremang	10901 Ventura Blvd	Studio City	CA	91604	(818) 760-7008
MYINT, Cho Cho	270 Sunset Ave.	Suisun City	CA	94585	(707) 426-1023
SENHRANG, Phunhremang	8325 Laurel Canyon Blvd	Sun Valley	CA	91352	(818) 768-0378
AUNG, Pyae Hein	10455 Sunland Blvd	Sunland	CA	91040	(818) 352-4544
SETIAWAN , Andri	1356 S Mary Ave	Sunnyvale	CA	94087	(408) 212-4928
MIXAY, Phayvanh	33145 Temecula Parkway	Temecula	CA	92592	(951) 303-3102

AFC Food Service Counters
Franchise List
As of March 31, 2026

Operator Name	Mailing Address 1	Mailing City	Mailing State	Mailing Zip	Phone Number
KYI, Tin Thidar	9470 Las Tunas Dr.	Temple City	CA	91780	(626) 286-8125
CHAE, Min Chul	3963 E. Thousand Oaks Blvd.	Thousand Oaks	CA	91362	(805) 496-2469
CHOI, Jeong A	1500 N Moorpark Rd.	Thousand Oaks	CA	91360	(805) 379-3100
CAMACHO CARREON, Javier	5035 Pacific Coast Hwy	Torrance	CA	90505	(310) 378-0295
LEE, Hyungkyu	3455 Sepulveda Blvd	Torrance	CA	90505	(310) 542-1639
ZHANG, Qiang	2909 Rolling Hills Rd	Torrance	CA	90505	(310) 325-0611
KANG, MyungHye	1770 Carson St.	Torrance	CA	90501	(310) 787-8786
Htoo, Tint Lwin	2550 South Tracy Blvd	Tracy	CA	95376	(209) 830-7700
KIM, Yoo Rok	13321 Jamboree Road	Tustin	CA	92782	(714) 544-0491
AUNG, Myint	1315 North State Street	Ukiah	CA	95482	(707) 468-5178
KWONG, Mike Mo Yun	3061 Alamo Drive	Vacaville	CA	95687	(707) 446-8707
MOE, Soe	27760 N McBean Pkwy	Valencia	CA	91354	(661) 263-7690
MOE, Soe	25930 McBean Pkwy	Valencia	CA	91355	(661) 254-3440
DEE, Saw Pit	7221 Woodman Ave	Van Nuys	CA	91405	(818) 785-3162
AUNG, Pyae Hein	12921 Magnolia Blvd	Van Nuys	CA	91423	(818) 986-2293
THU, Min Paing Myat	17250 Saticoy St.	Van Nuys	CA	91406	(818) 609-8425
LIEM, Lena	910 Lincoln Blvd	Venice	CA	90291	(310) 392-4854
MOE, Myat Kaung	1776 Victoria Avenue	Ventura	CA	93003	(805) 650-0239
NAM, Jung Ryeong	17801 Santiago Blvd.	Villa Park	CA	92861	(714) 998-0004
ZHENG, XiaoMei	1912 Main St.	Watsonville	CA	95076	(831) 728-9555
YI, Kwang San	22915 Victory Blvd.	West Hills	CA	91307	(818) 716-8199
CHAE, Jeong A An	9040 W. Beverly Blvd.	West Hollywood	CA	90048	(310) 278-1351
WIN, Si Thu	1233 N. La Brea	West Hollywood	CA	90038	(323) 876-8790
XIONG, Gang	14919 Whittier Blvd	Whittier	CA	90605	(562) 945-3779
XIONG, Gang	11825 Whittier Blvd	Whittier	CA	90601	(562) 692-4565
HTAY, San San	367 West Main St.	Woodland	CA	95695	(530) 666-1156
PARSONS, James Michael	1885 East Gibson Rd.	Woodland	CA	95776	(530) 668-4422
DEE, Saw Pit	20060 Ventura Blvd	Woodland Hills	CA	91364	(818) 883-7552
KYI, Mya	1842 Fort Jones	Yreka	CA	96097	(530) 842-4307
HTOO, Kyaw Kaw	700 W. Onstott Frontage Road	Yuba City	CA	95991	(530) 673-5931
AUNG, Ma Su Su	1286 Stabler Lane	Yuba City	CA	95993	(530) 755-3991
LIAN, Van	4747 Arapahoe Ave.	Boulder	CO	80303	(303) 415-7000
MYINT, Thein Htay	801 16th Street	Denver	CO	80202	(303) 571-5314
PAW, Lah Ku	121 Farmington Ave	Bristol	CT	06010	(860) 582-2876
CHEZIN, Lobsang	1220 Storrs Road	Mansfield	CT	06268	(860) 553-6555
NAING, Moe Mu Yar	855 Washington St	Middletown	CT	06457	(860) 740-7700
NAING, Aung Myo	20 York Street	New Haven	CT	06511	(617) 980-0284
NAING, Aung Myo	1450 Chapel St	New Haven	CT	06511	(203) 789-3000
VIMALA, NFN	300 Oxford Road	Oxford	CT	06478	(203) 463-7990
NAING, Shwe Bhone Myat	410 Queen Street	Southington	CT	06489	(860) 621-2128
GOKUL, FNU	990 Torringford Street	Torrington	CT	06790	(860) 496-5051
NAING, Moe Mu Yar	675 Poquonock Ave	Windsor	CT	06095	(860) 687-1411
VUM, Tual	111 Michigan Ave NW 300	Washington	DC	20010	(202) 476-5000
HTUT, Maung Than	1900 Pennsylvania Ave NW	Washington	DC	20421	(202) 623-7000
HTUT, Maung Than	700 19th Street NW	Washington	DC	20431	(202) 623-7000
MANG, Lai San	1790 Ash St SE	Washington DC	DC	20032	(202) 282-8010
NAING, Soe	1600 S. Andrews Ave.	Fort Lauderdale	FL	33316	(954) 355-5661
MAR, The	13752 Little Road	Hudson	FL	34667	727.861.1990
LYAN, Michael	2125 E. CR 540	Lakeland	FL	33813	863.607.4522
NYUNT, Peter	1611 NW 12th Avenue	Miami	FL	33136	(305) 585-8159
SHIN, Michael Myint	601 E. Rollins Street	Orlando	FL	32803	(407) 303-1793
KHUP, Thang En	1414 Kuhl Ave.	Orlando	FL	32806	(321) 841-3040
KHUP, Thang En	83 West Miller Street	Orlando	FL	32806	(321) 841-1614
MYAING, Yin Yin	201 E Sample Rd	Pompano Beach	FL	33064	(954) 941-8300
LEONG, Richard Kyi Sein	401 Kennedy Street	Tampa	FL	33606	(813) 253-3333
KHIN, Henry	13000 Bruce B Downs Blvd	Tampa	FL	33612	(813) 972-2000
YEE, Khine Su	2950 Cleveland Clinic Blvd	Weston	FL	33331	(954) 659-5000
KHUP, Suan Khan	1021 N Loop Road	Atlanta	GA	30354	(404) 714-0543
MANG, Hau Lian	17 Monroe Highway	Winder	GA	30680	770.307.2900
YOU, Sufang	3221 Waialae Avenue	Honolulu	HI	96816	(808) 733-5050
TAN, Keong Laurel Ping Sie	1301 Punch Bowl St.	Honolulu	HI	96813	(808) 538-9011
LAHPAI, John Z.	1310 South Kihei Rd	Kihei	HI	96753	(808) 442-4750

AFC Food Service Counters
Franchise List
As of March 31, 2026

Operator Name	Mailing Address 1	Mailing City	Mailing State	Mailing Zip	Phone Number
LAHPAI, John Z.	3350 Lower Honoapiilani Rd.	Lahaina	HI	96761	(808) 442-4700
Du, Zen	94-766 Farrington Hwy.	Waipahu	HI	96797	(808) 671-0502
HTUN, Tutu	720 E. Park Blvd.	Boise	ID	83712	(208) 381-2222
BLUT, Nay	10751 W. Overland Rd.	Boise	ID	83709	(208) 373-5200
HKEAT, Eh Paw	3527 South Federal Way	Boise	ID	83705	(208) 424-7500
HTOO, Nay	5230 W. Franklin Rd.	Boise	ID	83705	(208) 429-6400
THANG, Law Kee	560 West Kathleen Ave	Coeur D Alene	ID	83815	(208) 665-4700
WAH, Mike	5425 Chinden Boulevard	Garden City	ID	83714	(208) 323-7020
KIM, Biak Than	1555 Northgate Mile	Idaho Falls	ID	83401	(208) 535-2520
BLU, Nay	1400 West Chinden Blvd	Meridian	ID	83646	(208) 893-6000
TAW, Eh Nay	1850 E. Fairview Ave.	Meridian	ID	83642	(208) 887-5240
NUENG, Htee	50 Second St. South	Nampa	ID	83651	(208) 465-2824
MUNG, Khual Khan	800 Yellowstone Ave.	Pocatello	ID	83201-4461	(208) 239-4000
CI, Men	705 Blue Lakes Blvd.	Twin Falls	ID	83301	(208) 736-5348
HTAIKE, Nai Than	2507 E Oakland Ave	Bloomington	IL	61701	(309) 662-5396
PYAY, Aung Tha	633 Armour Rd	Bourbonnais	IL	60914	(815) 935-1650
KYI, Khin Maung	501 N Giant City Road	Carbondale	IL	62902	(618) 457-5313
CING, Ciin Ngaih	757 North Michigan Ave	Chicago	IL	60611	(312) 664-8686
CING, Ciin Ngaih	151 North State Street	Chicago	IL	60601	(312) 863-4249
CING, Ciin Ngaih	410 North Michigan Ave	Chicago	IL	60611	(312) 321-0951
OU, Zhuanxiao	225 E. Chicago Ave	Chicago	IL	60611	(312) 227-4000
SANGA, Zo Nun	3070 N Water St	Decatur	IL	62526	(217) 875-1296
SANGA, Zo Nun	1818 South Airport Plaza	Decatur	IL	62521	(217) 864-5031
KYI, Khin Maung	1609 S Park Ave.	Herrin	IL	62948	(618) 942-4954
KYI, Khin Maung	1704 Deyoung St.	Marion	IL	62959	(618) 993-6330
LIAN, Henry V	1001 West Jackson	Morton	IL	61550	(309) 266-5366
HLUN, Tial	415 South 42nd Street	Mt. Vernon	IL	62864	(618) 244-6210
HTAIKE, Nai Than	1550 E College Ave	Normal	IL	61761	(309) 452-7476
GO CIN KHUAL, Gabriel	1607 Broadway Street	Pekin	IL	61554	(309) 353-5300
SING, Mang Za	9219 N Lindbergh Dr,	Peoria	IL	61615	(309) 691-8701
LIAN, Henry V	20 Cherry Tree	Washington	IL	61571	(309) 444-8585
THU, Maw	4025 S Old State Road 37	Bloomington	IN	47401	(812) 824-5200
VUNG, Zo Ngur	5810 E 71St St	Indianapolis	IN	46220	(317) 845-9653
THANG, Ci Lian	2864 Charlestown Rd.	Albany	IN	47150	(812) 944-7016
BIK, Cung Lian	1845 North Scatterfield Rd	Anderson	IN	46012	(765) 649-2276
LIAN, Van Cung	108 N Avon Ave	Avon	IN	46123	(317) 272-4130
HMUNG, Van Lian	500 S. Liberty Drive	Bloomington	IN	47403	(812) 349-1385
MAUNG, Tial	528 S College Ave	Bloomington	IN	47403	(812) 339-3351
HMUNG, Sui Hre	1175 S College Mall Rd	Bloomington	IN	47401	(812) 333-5766
LIAN, Tum	1825 Kinser Pike	Bloomington	IN	47404	(812) 335-6760
MANG, Ceu Chin	975 N. Green St.	Brownsburg	IN	46112	(317) 852-6076
MANGHLEI, Niuk	1217 S. Rangeline Rd.	Carmel	IN	46032	(317) 843-4431
THANG, Ci Lian	305 E. Lewis and Clark Parkway	Clarksville	IN	47129	(812) 948-1742
NAI, Nai Banya	621 Countryside Drive	Columbia City	IN	46725	(260) 244-3290
ZAATHANG, Chansawlin	3060 National Road	Columbus	IN	47201	(812) 376-9451
HNIANG, Amy Sui	389 Old Capital Plaza NW	Corydon	IN	47112	(812) 738-3225
SADAI, El	785 East Main Street	Danville	IN	46122	(317) 745-8020
SAW, Min Min	130 W Hively Ave	Elkhart	IN	46517	(574) 294-6130
MANG TEI, Amos	7450 Fishers Station Drive	Fishers	IN	46038-2323	(317) 579-0201
HNIN, Suitin Cer	11700 Olio Road	Fishers	IN	46037	(317) 598-8400
ZATHANG, Carson Lenza	9799 E. 116th Street	Fishers	IN	46037	(317) 913-5500
HNIANG, Amy Sui	815 Highlander Point Dr.	Floyds Knobs	IN	47119	(812) 923-5074
CLASS, Nai	6310 E. State Blvd	Fort Wayne	IN	46815	(260) 749-5102
HTAY, Maung	5725 Coventry Lane	Fort Wayne	IN	46804	(260) 432-2305
DAL, Kham Khen	601 East DuPont Road	Fort Wayne	IN	46825	(260) 637-4504
MAI, Christina Doi	6002 St. Jose Center Road	Fort Wayne	IN	46835	(260) 485-9611
KHAM, Gregory Thang Suan	10230 Chestnut Plaza Drive	Fort Wayne	IN	46814	(260) 625-6031
KHAM, Gregory Thang Suan	218 E Pettit Ave	Fort Wayne	IN	46806	(260) 745-7800
KHAM, Gregory Thang Suan	1125 W State Blvd	Fort Wayne	IN	46808	(260) 426-3453
SORN, Jaw	4120 N Clinton Road	Fort Wayne	IN	46805	(260) 484-7021
THLUAI, Ngun Tin	970 North Morton Street	Franklin	IN	46131	(317) 736-6004
SAW, Min Min	209 Chicago Ave	Goshen	IN	46526	(574) 533-9949

AFC Food Service Counters
Franchise List
As of March 31, 2026

Operator Name	Mailing Address 1	Mailing City	Mailing State	Mailing Zip	Phone Number
CHERPUT, Vanlal Muana	821 Indianapolis Road	Greencastle	IN	46135	(765) 653-8032
KI, Dawt	1571 North State Street	Greenfield	IN	46140	(317) 462-3451
THANG, Maung Lian	5961 N STATE ROAD 135	Greenwood	IN	46143	(317) 530-3086
LING, Ceu	2200 Independence Dr.	Greenwood	IN	46143	(317) 883-4140
THAWNG, Cung	3100 Meridian Park Drive	Greenwood	IN	46142	(317) 887-5745
HU, Lian Z.	8745 S Emerson Ave	Indianapolis	IN	46237	(317) 884-3320
Van, Chris Thawngci	5718 Crawfordsville Road	Indianapolis	IN	46224	(317) 240-5000
CING, Cing	5911 South Madison Avenue	Indianapolis	IN	46227	(317) 783-4947
AWM, Lal Rin	8130 E. Southport Road	Indianapolis	IN	46259	(317) 245-4453
CUNG, James Vanbiak	4202 S. East Street	Indianapolis	IN	46227	(317) 721-4245
MON HONG ZAR, Aie Weng	11101 Pendleton Pike	Indianapolis	IN	46236	(317) 823-3240
MON HONG ZAR, Aie Weng	9835 Fall Creek Road	Indianapolis	IN	46256	(317) 577-3481
LING, Ram Peng	8150 Rockville Rd	Indianapolis	IN	46214	(317) 271-9591
IANG, Zing Tha	1365 E.86th Street	Indianapolis	IN	46240	(317) 217-1190
SIN, Grace Hniarcer	1330 West Southport Road	Indianapolis	IN	46217	(317) 884-4245
NUN, Joel Bawi	227 W. Michigan Street	Indianapolis	IN	46204	(317) 262-5215
HLEN, Mang	2550 Lake Circle Lane	Indianapolis	IN	46268	(317) 879-2460
HLEN, Mang	5025 W 71st St	Indianapolis	IN	46268	(502) 571-4626
ZATHANG, Carson Lenza	Lilly Corporate Center DC 1805	Indianapolis	IN	46285	(317) 277-7183
KHUMA, Ri	7101 E. 10th Street	Indianapolis	IN	46219	(317) 352-1721
KHUMA, Ri	4445 E 10Th St	Indianapolis	IN	46201	(317) 359-1166
KHUMA, Ri	10450 E Washington St	Indianapolis	IN	46229	(317) 895-2245
THANG, Sairas	2629 East 65th Street	Indianapolis	IN	46220	(317) 255-1498
LUAI, Ngun Li	5350 E Thompson Road	Indianapolis	IN	46237	(317) 781-3560
RUAT, Lal Rem	1027 Jeffersonville Commons Dr.	Jeffersonville	IN	47130	(812) 283-5222
SADAI, El	310 W North St	Kendallville	IN	46755	(260) 347-9155
THANG, Van	2821 S Washington St	Kokomo	IN	46902	(765) 453-7556
THANG, Van	605 N. Dixon Highway	Kokomo	IN	46901	(765) 457-2514
MANG, Steven H.	2513 Maple Point Dr.	Lafayette	IN	47905	(765) 447-7533
RAMMAHTAW, Ong Sike	2420 N. Lebanon Street	Lebanon	IN	46052	(765) 482-7274
LEN, Za Nei Par	1600 S. Ohio	Martinsville	IN	46151	(765) 342-7151
THAWNG, Cung	530 S Indiana St.	Moorseville	IN	46158	(317) 831-0241
KIM, Van Nuam	715 S. Tillotson Ave.	Muncie	IN	47304	(765) 213-1200
RAMARN, Nai	1500 W. McGalliard	Muncie	IN	47304	(765) 751-1500
HNIANG, Amy Sui	200 New Albany Plz	New Albany	IN	47150	(812) 948-2817
TLEM, Ngun	120 S Memorial Dr	New Castle	IN	47362	(765) 529-7396
CLASS, Nai	821 Lincoln Hwy W	New Haven	IN	46774	(317) 217-1190
THANG, Lian Khawcin	172 W. Logan Street	Noblesville	IN	46060	(317) 776-3344
KHAI, Go Khan	14800 Hazel Dell Crossing	Noblesville	IN	46062	(317) 844-1004
NAWLTHANG, Ngun Hleitial	1930 E Main St	Plainfield	IN	46168	(317) 839-7961
MUANG, Thang Sian	3701 National Road E	Richmond	IN	47374	(765) 935-1244
THANG, Uk Tha	202 S Main St	Rushville	IN	46173	(765) 932-5511
RUAT, Lal Rem	7605 High Way 311	Sellersburg	IN	47172	(812) 246-4730
THANG, Uk Tha	1601 E Michigan Rd	Shelbyville	IN	46176	(317) 421-3250
THLUAI, Ngun Tin	2140 Fort Harrison Rd	Terre Haute	IN	47804	(812) 466-6861
THLUAI, Ngun Tin	2650 Wabash Ave	Terre Haute	IN	47803	(812) 232-4519
THLUAI, Ngun Tin	4714 S US HWY 41	Terre Haute	IN	47802	(812) 232-8379
THANG, David Van Ro	2211 E Center Street	Warsaw	IN	46580	(574) 267-8848
THANG, Bawi Cung	1032 Sagamore Pkwy W	West Lafayette	IN	47906	(765) 464-1456
CEM, Cung Dawt	150 W. 161 Street	Westfield	IN	46074	(317) 867-6314
CIN, Hrang Kap	17447 Carey Road	Westfield	IN	46074	(317) 867-1002
DIM, Tial	10679 N. Michigan Road	Zionsville	IN	46077	(317) 733-2560
PENG, Hram	5 Boone Village	Zionsville	IN	46077	(317) 873-2366
ROT, Nai Mangay	225 E. Cloud	Andover	KS	67002	(316) 733-3720
CHAN, Aye	1624 N. Rock Road	Derby	KS	67037	(316) 554-2129
BOUTHAVONG, Tasha Soukhaphone	1700 N. 14th Street	Dodge City	KS	67801	(620) 225-6130
PAW, Moe Eh	1305 East Kansas	Garden City	KS	67846	(620) 275-4274
PAW, Moe Eh	1211 Buffalo Jones Ave	Garden City	KS	67846	(620) 275-0194
TE, Kim	531 West 27Th Street	Hays	KS	67601	(785) 628-1016
TE, Kim	1902 Vine Street	Hays	KS	67601	(785) 628-6137
NAUNG, Htoo Myat	206 W 5Th Ave	Hutchinson	KS	67501	(620) 663-4464
NAUNG, Htoo Myat	3200 Plaza East Drive	Hutchinson	KS	67502	(620) 665-5579

AFC Food Service Counters
Franchise List
As of March 31, 2026

Operator Name	Mailing Address 1	Mailing City	Mailing State	Mailing Zip	Phone Number
TUANG, Dal Khan	618 West 6th Street	Junction City	KS	66441	(785) 238-2141
KHAM, Kham	3000 W. 6th St.	Lawrence	KS	66049	(785) 843-0652
LE, Hmung	4701 West 6th	Lawrence	KS	66049	(785) 838-0100
THANG, Van Hnin	2205 Iowa St	Lawrence	KS	66046	
SUI, Mah	1740 Massachusetts St.	Lawrence	KS	66044	(785) 842-2434
KEE, Peter	720 Eisenhower Road	Leavenworth	KS	66048	(913) 250-3500
TUANG, Dal Khan	130 Sarber Lane	Manhattan	KS	66502	(785) 776-9285
LASHAM, Tu Lum	1101 Westloop Place	Manhattan	KS	66502	(785) 539-7631
LIAN, Khai Sawm	1410 S Kansas	Newston	KS	67114	(316) 284-3720
LIAN, Khai Sawm	1216 N Main	Newton	KS	67114	(316) 283-4180
LAZUM, Seng Naw	2350 Planet Ave	Salina	KS	67401	(785) 823-9403
LAZUM, Seng Naw	1235 E. Cloud St.	Salina	KS	67401	(785) 827-8775
SANG, Run Cung	5311 S.W. 22nd Place	Topeka	KS	66614	(785) 228-8760
BILL, Anthony	800 NW 25th Street	Topeka	KS	66618	(785) 357-2660
YOUNGPOEIH, Boeithang Batu	2010 SE 29th Street	Topeka	KS	66605	(785) 267-1797
LIAN, ZA HEI	4015 S.W. 10th Street	Topeka	KS	66604	(785) 228-8700
SANAY, Linnai	3707 North Woodlawn	Wichita	KS	67220	(316) 691-9130
MYINT, Naing Naing	2244 North Rock Rd. Ct.	Wichita	KS	67226	(316) 685-5844
HUP, Ni	13415 Maple Street	Wichita	KS	67235	(316) 729-5200
HUP, Ni	8828 W 13th Street N	Wichita	KS	67212	(316) 722-5690
KYI, Cho	3211 S Seneca	Wichita	KS	67217	(316) 522-4404
ROT, Nai Mangay	5500 E Harry Street	Wichita	KS	67218	(301) 686-5200
NAW, THIDAR WIN	9450 East Harry	Wichita	KS	67207	(316) 651-2720
KHIN, Thanda	7707 E. Central	Wichita	KS	67206	(316) 651-2700
OO, Lay Naing	10222 W 21st	Wichita	KS	67205	(316) 729-1530
SOE, Thike	3932 W 13th St N	Wichita	KS	67203	
SOE, Thike	10515 W Central	Wichita	KS	67212	(316) 729-0050
SOE, Thike	1910 W 21st N	Wichita	KS	67203	(316) 838-1158
SOE, Thike	640 North West Street	Wichita	KS	67203	(316) 941-1920
KHUN, Mark	4747 South Broadway	Witchita	KS	67216	(316) 529-9030
NAW, THIDAR WIN	3020 E. Douglas Ave	Witchita	KS	67214	(316) 681-6830
WEI, Wei	711 Martin Luther King Jr.	Ashland	KY	41101	(606) 325-8231
WEI, Wei	370 Diedrich Blvd/ Greenup Mall	Ashland	KY	41101	(606) 325-8911
PUI, Lynda	102 West John Rowan Blvd	Bardstown	KY	40004	(502) 348-2864
THAR, David Lal Nun	568 River Ridge Plaza	Brandenburg	KY	40108	(270) 422-5464
LIAN, Tun Tuang	2835 S. Highway 393	Buckner	KY	40031	(800) 576-4377
KO KO, Maung Win Htet	200 Skywatch Drive	Danville	KY	40422	(859) 236-3987
CHIN, Rebecca	111 Towne Drive	Elizabethtown	KY	42701	(270) 737-1707
OO, Sandar	3040 Dolphin Drive	Elizabethtown	KY	42701	(270) 765-5229
LIAN, Ceu Cung	1309 US HIGHWAY 127 S	Frankfort	KY	40601	(502) 875-0124
OO, Than Myo	302 Brighton Park Blvd	Frankfort	KY	40601	(502) 695-4860
KAP, Do Lian	151 Engineering Way	Georgetown	KY	40324	(502) 642-2000
MYINT, Sar Sar	106 Marketplace Circle	Georgetown	KY	40324	(502) 868-5068
KO KO, Maung Win Htet	844 S College St	Harrodsburg	KY	40330	(859) 734-0081
OO, Than Myo	1300 Anderson Crossing Dr	Lawrenceburg	KY	40342	(502) 859-0234
TE, Lal	1000 S Limestone	Lexington	KY	40536	(859) 323-5825
CHAN, Rebecca	4110 Tates Creek Centre Drive	Lexington	KY	40517	(859) 273-1100
LWIN, Win Aung	1060 CHINOE ROAD	Lexington	KY	40502	(859) 335-4706
SUAN, Pau Za	1808 Alexandria Drive	Lexington	KY	40504	(859) 276-3556
MO, Sai	1650 BRYAN STATION ROAD	LEXINGTON	KY	40505	(859) 293-5969
TLUANGA, Jonathan Lalnun	3175 Beaumont Center Circle	Lexington	KY	40513	(859) 219-1091
HNIANG, Hrin	759-777 Newtown Springs Dr.	Lexington	KY	40511	
KO, Win Min	1600 LEESTOWN RD, Suite 150	Lexington	KY	40511	(859) 259-0933
ZAN, Myat Myat	704 Euclid Ave	Lexington	KY	40502	(859) 269-6804
TUN, Oo Kyaw	3101 Richmond Road	Lexington	KY	40509	(859) 266-9205
CUNG, Van La	3650 Boston Road	Lexington	KY	40514	(859) 223-8088
CUNG, Van La	4750 Hartland Parkway	Lexington	KY	40515	(859) 273-2557
SOE, Maung Maung	150 W Lowry Lane	Lexington	KY	40503	(859) 278-6228
MANG, Cin Go	5533 New Cut Rd.	Louisville	KY	40214	(502) 361-7446
SHU, Sa San	7509 Terry Road	Louisville	KY	40258	(502) 935-8954
SHU, Sa San	10645 Dixie Hwy	Louisville	KY	40272	(502) 937-5205
AYE, Chan	12450 La Gange Road	Louisville	KY	40245	(502) 241-1311

AFC Food Service Counters
Franchise List
As of March 31, 2026

Operator Name	Mailing Address 1	Mailing City	Mailing State	Mailing Zip	Phone Number
LIAN, Paul Sang	4009 POPLAR LEVEL RD.	LOUISVILLE	KY	40213	(502) 454-3914
LIAN, Paul Sang	1265 GOSS AVENUE	LOUISVILLE	KY	40217	(502) 634-0724
SUM, Patrick	2440 Bardstown	Louisville	KY	40205	(502) 459-9805
WANG, Lu	6900 Bardstown Road	Louisville	KY	40291	(502) 239-2115
HRE, Ngun Tun	4915 Dixie Highway	Louisville	KY	40216	(502) 448-8215
THANG, Cung	12501 Shelbyville Road	Louisville	KY	40243	(502) 244-7957
SEN, Nem	10010 Ballardsville Rd	Louisville	KY	40241	(502) 357-3505
ZO THANG PUIL, Cindy	2710 W Broadway	Louisville	KY	40211	(502) 778-3346
ZO THANG PUIL, Cindy	3165 S 2nd St	Louisville	KY	40208	(502) 368-6075
ZO THANG PUIL, Cindy	520 N 35th St.	Louisville	KY	40212	(502) 776-3713
KHAM, Thang Sian	2200 Brownsboro Road	Louisville	KY	40206	(502) 897-1133
DING, Za Muan	6745 Beulah Church Rd.	Louisville	KY	40291	
KAP, Thang Khen	5001 Mud Lane	Louisville	KY	40229	(502) 962-7744
TAWNG, Brang	9440 Brownsboro Rd.	Louisville	KY	40241	(502) 425-8542
SOE, Shein Tayzar	291 North Hubbard Lane #130	Louisville	KY	40207	(502) 895-8308
SOE, Shein Tayzar	9501 WESTPORT ROAD	Louisville	KY	40241	(502) 425-0065
THANG, Pau Khan	12611 TAYLORSVILLE RD.	Louisville	KY	40299	(502) 261-0251
SUM, Albert	9812 Linn Station Rd	Louisville	KY	40223	(502) 423-0943
SUM, Albert	3039 Breckenridge Lane	Louisville	KY	40220	(502) 452-6445
SUM, Albert	4501 Outerloop	Louisville	KY	40219	(502) 969-2855
SUM, Albert	3616 Buechel Bypass	Louisville	KY	40218	(502) 456-6522
NGEH, Mi	9080 Taylorsville Rd.	Louisville	KY	40299	(502) 499-6912
THANG, Pau Lam	2219 Holiday Manor Court	Lousiville	KY	40222	(502) 813-3220
NAI, Chan	300 Kroger Center	Morehead	KY	40351	(606) 784-7529
MO, Sai	810 Indian Mount Drive	Mt. Sterling	KY	40353	(859) 497-4314
WANG, Lu	234 Eastbrooke Parkway	Mt. Washington	KY	40047	(502) 538-1240
LWYNN, Phone	995 South Main St.	Nicholasville	KY	40356	(859) 887-1201
THAWNG, Nang Deih	1670 Starlite Drive	Owensboro	KY	42301	(270) 926-1607
THAWNG, Nang Deih	2630 Frederica Street	Owensboro	KY	42301	(270) 684-9411
CEU, Van Lal Lian	5929 Timber Ridge Drive	Prospect	KY	40059	(502) 292-2464
NAING, Myo	890 RICHMOND PLAZA	RICHMOND	KY	40475	(859) 624-1091
IANG, Saw Za	311 Boone Station Road	Shelbyville	KY	40065	(502) 633-1625
HNING, Gi	185 Adam Shepherd Pkwy	Shepherdsville	KY	40165	(502) 543-7242
KIM, Do Thawn	50 Stonegate Center	Somerset	KY	42501	(606) 678-0202
KIM, Do Thawn	181 S. HWY 27	Somerset	KY	42501	(606) 678-5147
LUK, Kyang	212 Kroger Way	Versailles	KY	40383	(859) 873-7704
KIM, Do Thawn	1187 N. Highway 27	Whitley City	KY	42653	(606) 376-2700
SHERPA, Doma	24 School Street	Boston	MA	02108	(617) 372-8156
SHERPA, Ngima	106 Saint Stephen St.	Boston	MA	02115	(617) 373-2530
TUN, Tin	560 Main Street	Gardner	MA	01440	(978) 730-1040
HTITE , Saw Wei Lin	300 Stockbridge Road	Great Barrington	MA	01230	(413) 528-8415
LWIN, Su Sandar	167 West Main Street	Hopkinton	MA	01748	(508) 625-3263
HTITE , Saw Wei Lin	495 Pittsfield Road	Lenox	MA	01240	(413) 443-5449
LWIN, Su Sandar	240 East Main Street	Marlborough	MA	01752	(508) 480-0109
GUO, Zheng Hua	555 Hubbard Ave	Pittsfield	MA	01201	(413) 442-7696
CHEN, Shi Ping	731 Boston Turnpike	Shrewsbury	MA	01545	(508) 791-7142
CHEN, Shi Ping	171 Worcester-Providence Turnpike	Sutton	MA	01590	(508) 865-5168
CHEN, Shi Ping	2 Worcester Road	Webster	MA	01570	(508) 943-7232
PHUNTSOK, Dhamchoe	72 Pullman Street	Worcester	MA	01606	(508) 854-8474
CHEN, Shi Ping	221-223 Park Ave	Worcester	MA	01609	(508) 798-5178
CHEN, Shi Ping	564 South West Cutoff	Worcester	MA	01610	(508) 752-3737
ZAN, Kyawt Kyawt	10 Center Drive	Bethesda	MD	20892	(301) 496-4000
CHO, Ham Liang	6906 Cooper Ave	Fort Meade	MD	20755	(301) 225-8100
THANG, Hniang Hnem	11100 Johns Hopkins Rd.	Laurel	MD	20723	(240) 228-5000
NWAY, Ma	9655 Colorado Lane N	Brooklyn Park	MN	55445	(763) 315-6767
GYATSO, Sherap	8600 North 114th Avenue	Champlin	MN	55316	(763) 427-2714
SAN, Thein	7900 Market Blvd	Chanhassen	MN	55317	(952) 934-1010
NWAY, Ma	12900 Riverdale Dr.	Coon Rapids	MN	55448	(763) 421-4252
KHAING, Myat Thwe Thwe	615 West Central Entrance	Duluth	MN	55811	2187270272
SANGTUALA, James	2900 Paris Rd	Columbia	MO	65202	(573) 474-9418
SANGTUALA, James	1729 W Broadway	Columbia	MO	65203	(573) 445-9433
TUANG, Gin Lam	Atrium Health Mercy Hospital	Charlotte,	NC	28207	(704) 304-5000

AFC Food Service Counters
Franchise List
As of March 31, 2026

Operator Name	Mailing Address 1	Mailing City	Mailing State	Mailing Zip	Phone Number
TUANG, Gin Lam	1000 Blythe Blvd	Charlotte	NC	28203	(704) 355-2000
TUANG, Gin Lam	1100 Blyth Blvd.	Charlotte	NC	28203	(704) 618-3528
SOE, Kyaw	2100 Stantonsburg Road	Greenville	NC	27835	(252) 847-4405
SAY, Lah	4055 Curtis Rd	Jacksonville	NC	28545	(910) 449-6395
ZEL, Hram	3614 Twin Creek Drive	Bellevue	NE	68123	(402) 292-3992
ZEL, Hram	801 Galvin Rd S	Bellevue	NE	68005	(402) 292-7070
CUNG, Lyan	7312 N 30th St	Omaha	NE	68112	(405) 451-7070
CUNG, Lyan	888 S Saddle Creek Rd	Omaha	NE	68106	(402) 551-0613
UK, Sang	13250 W Maple Rd	Omaha	NE	68164	(402) 496-9200
IANG, Sui Tha	4405 N 72nd St	Omaha	NE	68104	(402) 571-3057
IANG, Sui Tha	5555 North 90th Street	Omaha	NE	68134	(402) 571-6850
CEU, Siang	17370 Lakeside Hills Plz	Omaha	NE	68130	(402) 333-2454
HI, Ngun	505 N 155th Plz	Omaha	NE	68154	(402) 498-5717
IANG, Dar Chin	12025 West Center Road	Omaha	NE	68144	(402) 334-5290
DINGZHEN WANGDUI, FNU	370 Miracle Mile Road	Lebanon	NH	03766	(603) 448-3970
DINGZHEN WANGDUI, FNU	285 Plainfield Road	West Lebanon	NH	03784	(603) 298-9670
YANG, DONGHYUN	3339 Las Vegas Blvd	Las Vegas	NV	89109	(702) 369-8166
HMINE, Sai Naw	1086 E Second St.	Reno	NV	89502	(775) 982-4100
HTITE , Saw Wei Lin	40 Delaware Avenue	Albany	NY	12210	(518) 465-2603
AUNG, Nwe Nwe	43 New Scotland Ave.	Albany	NY	12208	(518) 262-3125
THANG, Moung	1400 Washington Ave	Albany	NY	12222	(518) 442-3300
THANG, Moung	1400 Washington Ave	Albany	NY	12222	(518) 442-3300
NYEIN, Chan	141 Sanford Farm Plaza	Amsterdam	NY	12010	(518) 843-0056
AUNG, Naing W.	860 Route 11	Champlain	NY	12919	(518) 298-4200
ZAM, Tha Hlei	5701 E. Circle Drive	Cicero	NY	13039	(315) 458-2056
MYINT, Win	1028 Route 146	Clifton Park	NY	12065	(518) 371-6155
MARIP, Seng Naw	15 Park Ave	Clifton Park	NY	12065	(518) 371-9107
SOE, Myo Min Min	240 Congress Street	Cohoes	NY	12047	(518) 237-6050
KAI, Ngun	354 Broadway	Fort Edward	NY	12828	(518) 832-6236
MYO, Khine	2614 Route 66	Ghent	NY	12034	(518) 392-9007
HTITE , Saw Wei Lin	329 Glenmont Road	Glenmont	NY	12077	(518) 433-4700
KEE, Moung	2080 Western Ave	Guilderland	NY	12084	(518) 456-5115
THANG, Moung	1706 Western Ave	Guilderland	NY	12203	(518) 456-0403
NYEIN, Chan	241 North Comrie Ave	Johnstown	NY	12095	(518) 762-8981
NYEIN, Chan	873 New Loudon Road	Latham	NY	12110	(518) 782-0441
HMUNG, Matthew Hramcin	1 Kendall Way	Malta	NY	12020	(518) 899-2438
MARIP, Seng Naw	1 Price Chopper Plaza	Mechanicville	NY	12118	(518) 664-1112
OO, Saw Aung Lin	4535 Commercial Drive	New Hartford	NY	13413	(315) 736-8376
NAING, Ye Myint	24 E. 101 Street	New York	NY	10029	(212) 241-6500
SAN, May	2333 Nott Street East	Niskayuna	NY	12309	(800) 666-7667
HMUNG, Matthew Hramcin	102 Van Rensselaer Square	North Greenbush	NY	12144	(877) 233-9072
KYAW, Aung Kyaw	981 Ford St Ext	Odgensburg	NY	13669	(315) 393-7153
SAY, Noven	142 Genesee Street	Oneida	NY	13421	(315) 363-8927
AUNG, Naing W.	19 Centre Drive	Plattsburg	NY	12901	(518) 562-3560
KAI, Ngun	677 Upper Glen Street	Queensbury	NY	12804	(518) 792-7456
MYO, Khine	501 Columbia Turnpike	Rensselaer	NY	12144	(518) 479-4380
SAY, Noven	1790 Black River Blvd	Rome	NY	13440	(315) 337-5086
LIAN, Biak Za	115 Ballston Ave	Saratoga	NY	12866	(518) 580-9172
JIANG, Jian Qing	3045 RT 50	Saratoga Springs	NY	12866	(518) 583-7551
MANG, Zung	1640 Easter Parkway	Schenectady	NY	12309	(518) 372-6553
MANG, Zung	442 Balltown Road	Schenectady	NY	12304	(518) 346-0182
NRAW KAWNG, Mung Hkyen La	1879 Altamont Ave	Schenectady	NY	12303	(518) 357-4050
SOE, Khaing	290 Saratoga Road	Scotia	NY	12302	(518) 399-4011
MYINT, Myo	1395 New Scotland Road	Slingerlands	NY	12159	(518) 478-0688
ZAM, Tha Hlei	2515 Erie Blvd East	Syracuse	NY	13224	(315) 449-2314
ZAM, Tha Hlei	4713 ONONDAGA BLVD	Syracuse	NY	13219	(315) 472-3812
SOE, Myo Min Min	716 Hoosick Road	Troy	NY	12180	(518) 266-9035
NRAW KAWNG, Mung Hkyen La	79 Vandenburgh Ave	Troy	NY	12180	(518) 459-8720
OO, Saw Aung Lin	1917 Genesee Street	Utica	NY	13501	(315) 732-1031
OO, Saw Aung Lin	50 Auert Ave	Utica	NY	13501	(310) 732-0507
NYEIN, Chan	515 19th Street	Watervliet	NY	12189	(518) 271-7446
PAR, Van Duh	1008 Washington Blvd	Belpre	OH	45714	(740) 423-5885

AFC Food Service Counters
Franchise List
As of March 31, 2026

Operator Name	Mailing Address 1	Mailing City	Mailing State	Mailing Zip	Phone Number
LEONG, Thandar	4450 Eastgate S. Blvd	Cincinnati	OH	45245	(513) 674-6000
SAR, Hong	9500 Euclid Ave	Cleveland	OH	44195	(216) 444-2200
LATT, Khin Maung	5440 Dixie Hwy.	Fairfield	OH	45014	(513) 674-6046
PAR, Van Duh	40 Acme St	Marietta	OH	45750	(740) 374-5855
LI, Leah	135 W. Lorain St.	Oberlin	OH	44074	(330) 730-1950
PU, Tuang	4300 W. Memorial Road	Oklahoma City	OK	73120	(405) 755-1515
LI, Guanfeng	15995 SW Walker Rd.	Beaverton	OR	97006	(503) 690-5800
KHUP, Lang Khan	11425 SW Beavrtn-Hillsdale Hwy	Beaverton	OR	97005	(503) 526-1800
VATH, Linda	60 Division Avenue	Eugene	OR	97404	(541) 461-1400
MARY, FNU	3333 W 11th Ave.	Eugene	OR	97402	(541) 484-4200
NAN, Mang Ca	4701 Highway 101	Florence	OR	97439	(541) 902-7300
DILLINGHAM, Huiying Huang	1101 Grants Pass Pkwy	Grants Pass	OR	97526	(541) 474-7200
CING, Don Khan	22075 NW Imbrie Drive	Hillsboro	OR	97124	(503) 747-1100
PIANG, Dal Sian	6495 SE Tualatin Valley Hwy	Hillsboro	OR	97123	(503) 848-4550
LIAN, Thang Thang	2655 Shasta Way	Klamath Falls	OR	97603	(541) 884-1086
LU , Lucy	2424 Crater Lake Hwy	Medford	OR	97504	(541) 779-6158
WANG, Daqiong	1301 Center Dr.	Medford	OR	97501	(541) 857-4650
LAI, Hau Nuam	3300 Portland Rd. Suite 100	Newberg	OR	97132	(503) 537-1358
CHENNI, Nadda A.	150 NE 20th St	Newport	OR	97365	(541) 265-4581
KHAI, Daai Suan	7555 SW Barbur Blvd.	Portland	OR	97219	(503) 452-3000
PIANG, Nang Kam	7404 Interstate Ave	Portland	OR	97217	(503) 286-6751
PIANG, Nang Kam	6850 N. Lombard	Portland	OR	97203	(503) 240-2700
AUNG, Htay	7700 SW Beavertn-Hillsdale Hwy	Portland	OR	97225	(503) 292-0731
WIN, Me Me	100 NW 20th Pl.	Portland	OR	97209	(503) 228-4821
SUAN, Khup Thang	3030 NE Weidler St	Portland	OR	97232	(503) 280-1308
CHI, Hong Cheng	3805 SE Hawthorne Blvd.	Portland	OR	97214	(503) 872-3300
CHAN, Phally Khon	929 NW Garden Valley Blvd	Roseburg	OR	97470	(541) 957-3034
HLAING, Khaing Tun	3450 Commercial St. S.E.	Salem	OR	97302	(503) 585-7663
KYAW, Kyaw	51501 S. Columbia River Hwy	Scappoose	OR	97056	(503) 543-4508
AUNG, Marry	11565 SW Pacific Highway	Tigard	OR	97223	(503) 293-7061
THANG, Cin Lam	19200 SW Martinazzi Ave	Tualatin	OR	97062	(503) 691-4208
AUNG, Aung Ko-Lwin	695 Highway 101	Warrenton	OR	97146	(503) 861-3003
NYI, Ko Nyi	30300 SW Boones Ferry Road	Wilsonville	OR	97070	(503) 570-3509
CAI, Yingchao	2400 Chew Street	Allentown	PA	18104	(484) 664-3100
LIAN, Henry Hrang	500 University Drive	Hershey	PA	17033	(717) 531-8521
PENG, Van	3400 Spruce St.	Philadelphia	PA	19104	(215) 662-2155
PENG, Van	1 Convention Ave	Philadelphia	PA	19104	(215) 662-4000
ASSER, Michael	4401 Penn Ave	Pittsburgh	PA	15224	(412) 692-5325
MANG, Pum L.	165 Ashley Ave	Charleston	SC	29425	(843) 792-2300
TUN, Naing	975 East 3rd Street	Chatanooga	TN	37403	(423) 778-7000
TUN, Naing	1755 Gunbarrel RD	Chatanooga	TN	37421	(423) 680-8000
Win, Shwe Yee	620 Skyline Drive	Jackson	TN	38301	(731) 541-5000
KHUP, Pau Khan	300 Med Tech Pkwy.	Johnson City	TN	37604	(423) 302-1000
KHUP, Pau Khan	400 N State of Franklin Rd	Johnson City	TN	37604	(423) 431-6111
MUNG, Cin Sian	3975 Airways Blvd	Memphis	TN	38116	(901) 922-1666
LIN, Huiyu	877 Jefferson Ave	Memphis	TN	38013	(901) 545-7100
Tuang, James Vumtheih	Ascension Saint Thomas Midtown 2000 Church Street	Nashville	TN	27203	(615) 284-5555
KIM, Clara Bawi Nei	4220 Harding Pike	Nashville	TN	37205	(615) 222-2111
LIAN, Francis Nang Do	12100 Samsung Blvd	Austin	TX	78754	(512) 672-1000
TOE, Nan Shw Mye	11500 N Mopac Expy	Austin	TX	78759	(512) 291-6192
TOE, Nan Shw Mye	1 Tesla Rd.	Austin	TX	78725	(512) 516-8177
THAWNG, Van Mang	1441 North Beckley Ave	Dallas	TX	75203	(214) 947-0000
SUNG, Cinthluai	5200 Harry Hines Blvd.	Dallas	TX	75235	(214) 590-8000
THANG, Francis	3500 Gaston Ave.	Dallas	TX	75246	(214) 820-0111
THANG, Francis	3500 Gaston Ave.	Dallas	TX	75246	(214) 820-0111
THANG, Francis	3500 Gaston Ave	Dallas	TX	75246	(214) 820-0111
TIO-HLEI, Elizer	5909 Harry Hines	Dallas	TX	75235	(214) 645-0141
THLUAI, Daisy Tialcin	4440 American Blvd.	Fort Worth	TX	76155	(800) 290-3433
CEU, Moly	1301 Pennsylvania	Fort Worth	TX	76104	(817) 250-2000
SENG, Aung	150 N Dairy Ashford Rd.	Houston	TX	77079	
MUNG, Pau Suan	6565 Fannin Street	Houston	TX	77030	(713) 790-2571
DOI, Htoi San	1400 Pressler St	Houston	TX	77030	(713) 792-2121

AFC Food Service Counters
Franchise List
As of March 31, 2026

Operator Name	Mailing Address 1	Mailing City	Mailing State	Mailing Zip	Phone Number
AWI, Van Lian Tha Thawng	6565 Headquarters Drive	Plano	TX	75024	(888) 255-3154
TIAL, Eunice I	7105 Corporate Drive	Plano	TX	75024	(800) 522-4317
BAU, Zyon	22777 Springwoods Village Parkway	Springs	TX	77389	(800) 537-5200
HKAWNG, Visit R Dau	2401 South 31st Street	Temple	TX	76508	(254) 724-2111
MANG, Lai San	4000 Arlington Blvd	Arlington	VA	22204	
ONG, Francis	1215 Lee Street	Charlottesville	VA	22903	(434) 924-0211
MANG, Lai San	8725 John J. Kingman Road	Fort Belvoir	VA	22060	877.352.2255
AUNG, Han Win	600 Gresham Drive	Norfolk	VA	23507	(757) 388-3000
SONG, Moon Keun	1840 Amherst Street	Winchester	VA	22601	(540) 536-8000
OO, Zaw	168 Ames Drive	Barre	VT	05641	(802) 479-9078
VILASA, FNU	214 Northside Drive	Bennington	VT	05201	(802) 447-9940
TINT, Kyaw	595 Shelburne Road	Burlington	VT	05401	(802) 651-9826
TINT, Kyaw	90 Center Road	Essex Junction	VT	05452	(802) 878-5163
SHWE, U Than	38 Rutland Shop Plaza	Rutland	VT	05701	(802) 747-7880
TINT, Kyaw	41 Hinesburg Road	South Burlington	VT	05403	(802) 864-9176
WIN, Chaw Su	857 Memorial Dr.	St Johnsbury	VT	05819	(802) 748-1109
SHWE, U Than	100 Westway Mall Drive	West Rutland	VT	05777	(802) 438-6119
LIAN, Peng Za	801 Auburn Way North	Auburn	WA	98002	(253) 931-5550
KHAI, Hau L.	401 NW 12th Ave.	Battleground	WA	98604	(360) 666-5108
VAN, Thang	2041 148th NE	Bellevue	WA	98007	(425) 865-8560
SANG, Michael Thawng Cem	5050 State Hwy 303 N.E.	Bremerton	WA	98311	(360) 792-2800
MEN, Sui Za	14300 First Avenue South	Burien	WA	98168	(206) 433-6411
ZUNGTLIR, Silas	16735 SE 272nd St.	Covington	WA	98042	(253) 639-7408
KHAING, Zin T	11 Grant Rd.	East Wenatchee	WA	98802	(509) 881-2808
KHAING, David Min	201 South Water	Ellensburg	WA	98926	(509) 962-0500
KHINE, Ei Kay	3003 West Casino Road	Everett	WA	98204	(425) 342-3275
THANG, Rebekah Rinmawi	33702 21st Ave. SW	Federal Way	WA	98023	(253) 952-0108
LIN, Kyaw Zayyar	5010 Point Fosdick	Gig Harbor	WA	98335	(253) 858-4842
NUN, Ngur	6100 E. Lake Sammamish Parkway SE	Issaquah	WA	98029	(425) 416-1100
AUNG, Moe Kyaw	2811 W. 10th Ave.	Kennewick	WA	99336	(509) 735-8700
PAR, Van Nei	25250 Pacific Hwy S.	Kent	WA	98032	(253) 946-7403
LWIN, Min Min	10611 N.E. 68th Street	Kirkland	WA	98033	(206) 923-5212
THANG, Lian	12221 120th Avenue NE	Kirkland	WA	98034	(425) 820-3203
BAWI, Heman	700 Sleater-Kenniey Rd. S.E.	Lacey	WA	98503	(360) 438-6462
OO, Aung Zaw	26520 Maple Valley Black	Maple Valley	WA	98038	(360) 636-1010
AYE, Phyu Phyu	2755 77th Ave SE	Mercer Island	WA	98040	(206) 232-2577
YANG, Jung Woo	1900 SE Sedgwick Rd.	Port Orchard	WA	98366	(360) 874-7148
CUNG, No Uk	1100 N. Meridian East	Puyallup	WA	98371	(253) 840-8150
CUNG, No Uk	17404 Meridian East	Puyallup	WA	98373	(253) 445-7848
HTWE, Mawi	900 Logan Avenue N	Renton	WA	98055	(425) 572-3172
MARY, Rose	365 Renton Center Way SW	Renton	WA	98055	(425) 204-5200
SOLOMON, Suan	17801 108th Ave SE	Renton	WA	98055	(425) 235-5365
SOE, Hein Latt	101 Wellsian Way	Richland	WA	99352	(509) 946-2808
SAN, Lal Rin	301 228th Ave SE	Sammamish	WA	98074	(425) 295-0456
KYAW, Min Thu	2320 42nd SW	Seattle	WA	98116	(206) 937-0551
KYAW, Min Thu	100 Mercer St.	Seattle	WA	98109	(206) 213-0778
KYAW, Min Thu	3830 34th Ave West	Seattle	WA	98199	(206) 283-2710
NYUNT, Win Htut	5250 40th Ave NE	Seattle	WA	98105	(206) 938-6600
NYO, Htay	2021 7th Avenue	Seattle	WA	98109	(206) 266-4064
THANG, Par Tin Dim	7755 East Marginal Way South	Seattle	WA	98108	(206) 655-1341
U, Hsu Mon	8532 15th Ave NW	Seattle	WA	98117	(206) 776-2900
THANG, Pau Lal	301 East Wallace-Kneeland Blvd	Shelton	WA	98584	(360) 427-2979
KHUAL, Dong Cin	12120 N. Division St.	Spokane	WA	99218	(509) 465-4400
THANG, Lian Go	400 South Thor St.	Spokane	WA	99202	(509) 532-4000
SWE, Nay Myo Thu	15609 E. Sprague Rd.	Spokane Valley	WA	99037	(509) 921-5350
CIN, Biak	1201 Valley Avenue	Sumner	WA	98390	(253) 826-8414
LIN, Kyaw Zayyar	2420 N. Proctor St.	Tacoma	WA	98406	(253) 761-3663
AUNG, Thawng	1624 E. 72nd St.	Tacoma	WA	98404	253.537.2124
MANG, Lal Cung	555 Trosper Road SW	Tumwater	WA	98512	(360) 753-7900
KIM, Sung Heon	6305 Bridgeport Way West	University Place	WA	98467	(253) 460-4000
CHEN, Jinxia	16600 SE McGillivray Blvd.	Vancouver	WA	98683	(360) 260-3308
CING, Niang Lam	800 NE Tenney Rd.,	Vancouver	WA	98686	(360) 571-2540

AFC Food Service Counters
Franchise List
As of March 31, 2026

Operator Name	Mailing Address 1	Mailing City	Mailing State	Mailing Zip	Phone Number
CIN, Pau Khaw	2500 Columbia House Blvd	Vancouver	WA	98661	(360) 992-3500
NUAM, Lam Ngaih	7411 NE 117th Ave,	Vancouver	WA	98662	(360) 896-3500
LIU, Bixiang	1206 North 40th Ave	Yakima	WA	98908	(509) 576-6808
MAUNG, Sithukyaw	6360 US Route 60	Barboursville	WV	25504	(304) 733-3370
OHN, Soe Than	151 N Beaver Ln	Beaver	WV	25813	(304) 255-5525
AYE LWIN, Antony	133 Beckley Crossing	Beckley	WV	25801	(304) 252-5573
OHN, Soe Than	1734 Harper Road	Beckley	WV	25801	(304) 254-0520
SAN, Tin Win	80 Skyline Drive Plaza	Buckhannon	WV	26201	(304) 472-0918
KHEE, Sai Lao	5450 Big Tyler Rd	Charleston	WV	25313	(304) 776-5063
KHAING, Aung Myat	5717 Mac Corkle Ave.	Charleston	WV	25304	(304) 925-5447
AUNG, Pwint Zar	500 Delaware Ave	Charleston	WV	25302	(304) 342-6995
AUNG, Pwint Zar	1100 Fledderjohn Rd	Charleston	WV	25314	(304) 342-8807
SAN, Tin Win	102 Emily Dr	Clarksburg	WV	26301	(304) 623-1015
AUNG, Pwint Zar	981 Dunbar village	Dunbar	WV	25064	(304) 768-6481
Phyo, Aung Pyae	450 11th St	Elkins	WV	26241	(304) 636-6888
KHAING, Aung Myat	223 Crossings Mall Rd	Elkview	WV	25071	(304) 965-2750
RAKHA, John	19 7th Ave W	Huntington	WV	25701	(304) 522-1201
RAKHA, John	2627 5th Avenue	Huntington	WV	25702	(304) 529-0670
KHAING, Aung Myat	10635 MacCorkle Ave	Marmet	WV	25315	(304) 949-6124
SOE, Linda	350 Patteson Dr.	Morgantown	WV	26505	(304) 599-5324
SOE, Linda	1851 Earl Core Rd.	Morgantown	WV	26505	(304) 296-7146
SOE, Maung Maung	500 Suncrest Town Centre	Morgantown	WV	26505	(304) 285-6419
AYE LWIN, Antony	411 Mall Rd	Oak Hill	WV	25901	(304) 469-2921
MUN, Khaing	1229 Stafford Dr	Princeton	WV	24740	(304) 487-6136
SOE, May N	178 Red Oaks Shopping Center	Ronceverte	WV	24970	(304) 645-7411
KHEE, Sai Lao	1439 Maccorkle Ave	Saint Albans	WV	25177	(304) 722-4248
KHEE, Sai Lao	101 Great Teays Blvd	Scott Depot	WV	25560	(304) 757-7915
AUNG, Pwint Zar	5 River Walk Mall	South Charleston	WV	25303	(304) 744-1472
AFC, FODChef	1500 South Capitol Street	Washington		20003	(202) 675-6287

If you buy this franchise, your contact information may be disclosed to other buyers when you leave the franchise system.

AFC Food Service Counters
Company Owned Locations
As of March 31, 2026

Operator Code	Mailing Address 1	Mailing City	Mailing State	Mailing Zip	Phone Number
AFCFC	505 Yukon Dr	Fairbanks	AK	99775	(907) 474-7034
AFCFC	99 S. Higley Rd	Gilbert	AZ	85296	(480) 926-5220
AFCFC	9925 E.Baseline Rd	Mesa	AZ	85209	(480) 354-2798
AFCFC	8360 N Thornydale Rd	Tucson	AZ	85741	(520) 744-4488
AFCFC	711 S Weir Canyon Rd.	Anaheim	CA	92808	(714) 283-8711
AFCFC	211 E Foothill Blvd.	Arcadia	CA	91006	(626) 357-1942
AFCFC	2400 Sand Creek Rd	Brentwood	CA	94513-8386	(925) 513-9400
AFCFC	650 E Carson St.	Carson	CA	90745	(310) 518-4191
AFCFC	2661 Green River Rd	Corona	CA	92882	(951) 371-4868
AFCFC	8626 Firestone Blvd	Downey	CA	90241	(562) 869-2733
AFCFC	3330 North Texas St.	Fairfield	CA	94533	(707) 421-9990
AFCFC	919 East Stanley Blvd	Livermore	CA	94550	(925) 443-9500
AFCFC	710 N Rose Dr.	Placentia	CA	92870	(714) 524-3984
AFCFC	615 W. Channel Islands	Port Hueneme	CA	93041	(805) 984-2005
AFCFC	4250 Van Buren Blvd	Riverside	CA	92503	(951) 352-8353
AFCFC	6155 Magnolia Ave	Riverside	CA	92506	(951) 274-9543
AFCFC	1301 Florin Rd.	Sacramento	CA	95831	(916) 421-6766
AFCFC	638 Camino del los Mares	San Clemente	CA	92673	(949) 496-8616
AFCFC	1050 N. Western Ave.	San Pedro	CA	90732	(310) 833-3506
AFCFC	1407 Fulton Rd.	Santa Rosa	CA	95403	(707) 546-3435
AFCFC	2900 Geer Rd.	Turlock	CA	95382	(209) 667-5253
AFCFC	3061 Alamo Dr.	Vacaville	CA	95687	(707) 446-8707
AFCFC	1601 West Capitol Ave	West Sacramento	CA	95691	(916) 372-3000
AFCFC	500 West Capitol Ave	West Sacramento	CA	95605	(800) 925-9989
AFCFC	8852 Lakewood Dr.	Windsor	CA	95492	(707) 838-6604
AFCFC	1850 E. Fairview Ave.	Meridian	ID	83642	(208) 887-5240
AFCFC	1405 W Garfield	Bartonville	IL	61607	(309) 697-8811
AFCFC	201 S Main St.	East Peoria	IL	61611	(309) 694-6298
AFCFC	801 W Lake Ave	Peoria	IL	61614	(309) 682-2173
AFCFC	201 E Bidwell St.	Taylorville	IL	62568	(317) 579-8100
AFCFC	700 N Main St.	El Dorado	KS	67042	(316) 321-0332
AFCFC	6829 SW 29th St.	Topeka	KS	66614	(785) 228-4200
AFCFC	170 BELLERIVE BLVD	NICHOLASVILLE	KY	40356	(859) 219-1058
AFCFC	220 East Brannon Road	Nicholasville	KY	40356	(859) 971-4300
AFCFC	995 South Main St.	Nicholasville	KY	40356	(859) 887-1201
AFCFC	1661 Bypass Road	Winchester	KY	40391	(859) 745-4959
AFCFC	2101 Schotthill Woods Dr	Jefferson City	MO	65101	(573) 659-3600
AFCFC	2805 W Truman Blvd	Jefferson City	MO	65109	(573) 893-3111
AFCFC	113 Holland Avenue	Albany	NY	12209-3410	(518) 626-5000
AFCFC	981 Ford St Ext	Odgensburg	NY	13669	(315) 393-7153
AFCFC	499 Canal Street	Brattleboro	VT	05301	(802) 254-3424
AFCFC	7601 Evergreen Way	Everett	WA	98203	425.355.7622
AFCFC	5502 Point Fosdic Dr. NW	Gig Harbor	WA	98335	(503) 797-5750

AFC Food Service Counters
List of Franchisees Who Transferred
By the End of March 31, 2026

FC Name	Address	City	State	Zip	Phone
LIAN, Go Khan	7551 E La Cienega Dr,	Arizona	AZ	85715-3526	(520) 272-0298
LIAN, Go Khan	7551 E La Cienega Dr,	Arizona	AZ	85715-3526	(520) 272-0298
MARUMOTO, Yoshikazu	2401 Lakeview Rd. Apt. 806	Arkansas	AZ	72116 - 9091	(214) 245-2506
AUNG THU, Su Myat	2304 Margo DR	California	CA	95355-9164	(209) 898-9437
CAO, Jayson Long	2706 W Yale Ave	California	CA	92801	(408) 382-9840
CHAE, Chang Hoon	335 N Adams St. Unit 303	California	CA	91206 -6011	(224) 628-6546
CUAI, Cuai	47420 Poppy Lane	California	CA	92253	(585) 512-6627
GO, Vonny L.	1500 W. 8th St., Apt 203	California	CA	91786	(626) 726-1221
HLAING, Zaw Zaw	7435 Patero Cir.	California	CA	95823	(314) 402-7659
HTOI, Hkawn	1180 N Calle Marcus	California	CA	92262	(585) 214-9149
JIN, Jae A	617 Prospect Ave #17	California	CA	91030	(213) 247-9977
KANG, MyungHye	5026 Rosewood Ave. Apt 506	California	CA	90004-1796	(323) 397-5282
Khine, Thet Thet	1236 VIOLA AVE UNIT A	California	CA	91202	(626) 519-1400
KIM, Joanne W	3250 W Fox Run Way	California	CA	92111	(858) 736-6387
KIM, Yu	2528 Flinn Springs Rd	California	CA	91915	(619) 857-3432
KYI, Marcus Chit	4155 Magnolia Blvd. Apt. 11	California	CA	91423 - 1150	(260) 267-8053
KYWE, Kaung	6936 Donna Ave	California	CA	91335	(626) 464-3237
LAI, Dongquan	1952 John Still Dr.	California	CA	95832 - 1244	(916) 267-7314
LEE, James K	1384 Hermosa Drive	California	CA	92879	(714) 287-6332
LEE, Tong Neng	1420 Olive Groove LN	California	CA	95965-4262	(530) 282-2101
LI, Zhi Fu	418 Vista Rambla	California	CA	91789	(626) 551-8161
LI, Zhi Fu	418 Vista Rambla	California	CA	91789	(626) 551-8161
LWIN, Maung	W Commonwealth Ave. Apt.	California	CA	92832-3715	(716) 908-8747
MUALIMAH, Mualimah	1335 N Poinsettia Pl. #6	California	CA	90046	(323) 949-9626
NAM, Kyung Mo	1525 W 158th St. Unit 6	California	CA	90247	(213) 700-0210
PHAN, Phuoc Hong	13452 Mickey St.	California	CA	92844	(714) 657-4505
QI, Qinfeng	31948 Corte Cardoza	California	CA	92592	(626) 554-0407
SIN, Peggy Seung Yeo	1001 Fairiew Ave. Apt. J	California	CA	91007 - 7195	(213) 880-9308
SOE, Thandar	4073 Center St.	California	CA	91706	(626) 328-8553
UK, Bual Hre	9748 San Remo CT.	California	CA	92071 - 2679	(619) 358-5118
WANG, Yaping	28226 Shore	California	CA	92692	(626) 501-6287
ZENG, Shuhua	26 Loma Mar Ct	California	CA	95828	(916) 225-8974
ZHAO, Guanghao	411 N Euclid St. Apt 46	California	CA	92832	(213) 245-9888
WIN, SAN DA	79 Parkview Dr.	Connecticut	CT	06109	(860) 655-3519
HUANG, Gui Fang	912 8th Ave A	Hawaii	HI	96816-7182	(407) 738-2138
THIAM, Lydia Van Nei	10532 Augusta Dr.	Kansas	KS	66109	(913) 278-7096
SUNG, Bawi Tha Hnem	11422 Nebraska Cir	Nebraska	NE	68164	(531) 247-9158
SUNG, Bawi Tha Hnem	11422 Nebraska Cir	Nebraska	NE	68164	(531) 247-9158
PAN, Winny	6048 Cumin Park St.	New Mexico	NM	88008 - 5224	(626) 257-8806
BAW, NI	704 Mohawk St	New York	NY	13501	(315) 723-6458
BAW, NI	704 Mohawk St	New York	NY	13501	(315) 723-6458
SWE, Kyi Kyi	30 WESTERN AVE #1	New York	NY	12144-3625	(347) 925-3630
SWE, Kyi Kyi	30 WESTERN AVE #1	New York	NY	12144-3625	(347) 925-3630
THIRI, Yamin	1625 First Street	New York	NY	12144	(804) 507-7782
THIRI, Yamin	1625 First Street	New York	NY	12144	(804) 507-7782
AYE, Tun Tun	33230 SW Maple St Apt 18	Oregon	OR	97056	(503) 791-3244
HAU, Kap Suan	11726 SE Smith Rock ST	Oregon	OR	97086	(971) 258-7653
MUSSER, Zoie	2825 Randall Ave	Oregon	OR	97502	(541) 414-5649
TONG, Yaxin	4399 Leonard Road	Oregon	OR	97527-9255	(541) 660-7052
WONGSOMADI, Budhiman	6558 SE Austin Dr.	Oregon	OR	97123	(503) 407-0135
MANG, Rebeccayex Khuat	6799 Kew Gdn	Tennessee	TN	37167	(615) 720-8860
GUALNAM, Tuang Donggel	3900 Black Granite Dr	Texas	TX	78744	(512) 796-0281
SANG, Tawt Hlei	2218 Ashwood Ct	Texas	TX	75006	(940) 368-5376
CHUNG, Phun	937 Insignia Loop #101	Washington	WA	98310	(515) 423-3098

If you buy this franchise, your contact information may be disclosed to other buyers when you leave the franchise system.

AFC Food Service Counters
Terminated List
As of March 31, 2026

Franchisee Name	Address	City	State	Zip	Phone
AWI, Om	565 W 16th Ave Apt. 3	Apache Junction	AZ	85120-6447	(210) 322-9108
MYINT, Wah Wah	3440 S Felix Way	Chandler	AZ	85248-3813	(207) 632-9743
MAWI, Biak	5743 N 38th Dr.	Phoenix	AZ	85019	(207) 632-9743
WIN, Kyaw Naing	3049 W. Dailey St.	Phoenix	AZ	85053	///
WIN, Kyaw Naing	3049 W. Dailey St.	Phoenix	AZ	85053	///
PENG, David Lian	25300 N 22nd Lane Apt. 3121	Phoenix	AZ	85085 - 8805	(503) 990-3830
WIN, Samuel	3500 W Orange Grove RD Apt. 4104	Tucson	AZ	85741-2862	///
MON, Wut Yee	7975 Combine Way	Antelope	CA	95843	(207) 632-9743
MON, Wut Yee	7975 Combine Way	Antelope	CA	95843	(207) 632-9743
MYO, Mon Nandar	6520 Springridge Way	Elk Grove	CA	95758-6343	(207) 632-9743
KHAT, Tin	915 Lakeside Dr	Lathrop	CA	95330	(561) 685-8470
HTIN LIN, Ni Ni	915 Lakeside Dr.	Lathrop	CA	95330	(404) 643-8676
HUANG, Weixiang	7316 Windbridge Dr.	Sacramento	CA	95831	(404) 643-8676
WU, Ming Feng	8596 Culpepper Dr.	Sacramento	CA	95823	///
HTAY, Khin Maung	5264 Yerba Buena Rd	Santa Rosa	CA	95409-3837	(404) 643-8676
CHEN, Min	8230 Kekaha Rd. PO Box 368	Kekaha	HI	96752	(832) 322-6684
WANGMO, Tsering	41 Amesbury St.	Worcester	MA	01605	///
WANGMO, Tsering	41 Amesbury St.	Worcester	MA	01605	///
WANGDUE, Tsering	5300 Vernon Ave. S Apt 117	Edina	MN	55436	///
RAJA, No Name Given	525 Kiah St.	Ogdensburg	NY	13669-2907	(240) 477-2069
HTUN, Win Min	4132 Buckingham Dr.	Schenectady	NY	12304	(404) 643-8676
HTUN, Win Min	4132 Buckingham Dr.	Schenectady	NY	12304	(404) 643-8676
LY, Chan	233 Mille Dr.	Syracuse	NY	13212	(626) 863-9509
LY, Chan	233 Mille Dr.	Syracuse	NY	13212	(626) 863-9509
AWI, Lian Cung	405 E Molloy Rd.	Syracuse	NY	13211	(210) 322-9108
AWI, Lian Cung	405 E Molloy Rd.	Syracuse	NY	13211	(210) 322-9108
BAW, NI	704 Mohawk St	Utica	NY	13501	///
BAW, NI	704 Mohawk St	Utica	NY	13501	///
BAW, NI	704 Mohawk St	Utica	NY	13501	///
SAW, San Maung Win	4590 Girvan Dr. Unit B	Myrtle Beach	SC	29579 - 7159	(678) 888-8838
PHYO, Wai	72 Black Mountain Rd. Apt. #3	Brattleboro	VT	05301	(503) 990-3830

on may be disclosed to other buyers when you leave the franchise system.

AFC Food Service Counters
List of Franchises Reacquired by Franchisor
As of End of March 31, 2026

Franchisee Name	Address	City	State	Zip	Phone
N/A					

If you buy this franchise, your contact information may be disclosed to other buyers when you leave the franchise system.

AFC Food Service Couters
Non-Renewal List
as of March 31, 2026

FCName	Address	City	State	Zip	Phone
KYAW, Hnin Yi	206 Teresa Way Apt. 27	Kelso	Washington	98626 - 5634	(503) 333-6194

If you buy this franchise, your contact information may be disclosed to other buyers when you leave the franchise system.

AFC Food Service Counters
Ceased Operations
As of March 31, 2026

Operator Code	Operator Name	Mailing Address 1	Mailing City	Mailing State	Mailing Zip	Phone Number
F-35365		3275 N. Swan Rd.	Tucson	AZ	85712	(520) 323-5820
CC-342	KHAING, Tun Aung	7901 Walerga Rd.	Antelope	CA	95843	(916) 725-0333
F-37089	WINT, Kyaw Thu Zaw	7901 Walerga Rd.	Antelope	CA	95843	(916) 725-0333
F-37195	BULATETSKYI, Yurii	2222 Grass Valley Hwy	Auburn	CA	95603	(530) 889-8626
FF-132	SHAY, Maung Bu	13384 Lincoln Way,	Auburn	CA	95603	(530) 885-0669
P-074	AYE, Win	2222 Grass Valley Hwy	Auburn	CA	95603	(530) 889-8626
F-38364	NWE, Tin Mya	5159 Fair Oaks Blvd	Carmichael	CA	95608	(916) 483-9033
F-38570	ZHANG, Zhilang	4005 Manzanita Ave.	Carmichael	CA	95608	(916) 483-2691
R-027	SWE, Mon Mon	692 Freeman Lane	Grass Valley	CA	95949	(530) 272-1958
P-083	HTUN, Kay Thi	39 Lincoln Blvd	Lincoln	CA	95648	(916) 408-5775
FF-726	TUN, Tun	6119 Horseshoe Bar Road	Loomis	CA	95650	(916) 652-5737
DD-345	LAH PAI, Roilum	2341 Sunset Blvd	Rocklin	CA	95765	(916) 632-0180
F-38269	HUANG, Shijuan	1039 Sunrise Ave.	Roseville	CA	95661	(916) 786-6101
F-38641	TUN, Pyae Phyo	1915 Douglas Blvd	Roseville	CA	95661	(916) 781-7845
FF-173	ENKHBAATAR, Sarangerel	4008 Foothills Blvd.	Roseville	CA	95747	(916) 783-1173
W-005	YI, Lae Lae	4320 Arden Way	Sacramento	CA	95864	(916) 972-0555
GG-164	KHURASRI, Narisa	1105 F Kuhio Hwy	Kapa'a	HI	96746	(808) 822-4971
H-763	AUNG, Htin	5516 Koloa Road	Koloa	HI	96756	(808) 742-1614
W-407	LEE, Mark	7111 W. Cermak Rd.	Berwyn	IL	60402	(708) 426-7150
F-37905	LOTONG, Ro Liansang	271 South Bolingbrook Drive	Bolingbrook	IL	60440	(630) 914-5494
F-38223	LIU, Shan Shan	109 Mattis Rd	Champaign	IL	61821	(217) 351-2600
EE-218	KHAING, Aung	2206 Barnes Blvd	Cherry Valley	IL	61012	(815) 332-7267
EE-746	CING, Niang Go	5233 North Lincoln Avenue	Chicago	IL	60625	(773) 943-6042
F-38039	CI, Hniang	1241 N. Rand Road	Prospect Heights	IL	60004	(847) 394-1000
S-080	KOP, Paa Sian	2801 Chatham Rd.	Springfield	IL	62704	(217) 698-2980
W-503	LUAI, Ngun Li	680 Twin Aire Dr.	Indianapolis	IN	46203	(317) 264-1762
F-39576	THANG, Van Hnin	1015 W. 23rd St.	Lawrence	KS	66046	(785) 841-3366
F-38740	PAR, Lily	1201 Pleasant Valley Rd.	Owensboro	KY	42303	(270) 417-2000
G-708	THANT, Orion	2657G Annapolis Rd.	Hanover	MD	21076	(410) 551-8700
S-907	LIANI, Zo Siam	11845 Old Georgetown	Rockville	MD	20852	(301) 468-3029
W-431	THANG, Moung	1060 Madison Ave	Albany	NY	12208	(518) 438-6241
F-34591	NYEIN, Chan	358 North Main Street	Gloversville	NY	12078	(518) 775-1464
W-396	NRAW KAWNG, Mung Hkyen La	475 Albany-Shaker Road	Loudonville	NY	12211	(518) 459-8720
T-347	MOE, Aung Maw	115 Temple Hill Rd	New Windsor	NY	12553	(845) 565-8637
E-012	NAING, Ye Myint	100 Woods Road	Valhalla	NY	10595	(914) 493-1407
F-38686	LIAN, Tial Peng	234 Goodman Street	Cincinnati	OH	45219	(513) 584-1000
F-38916	LIAN, Thang	825 Stanton L Young Blvd	Oklahoma City	OK	73104	(405) 271-4700
U-752	YUAN, Li Q	1200 South Cedar Crest Blvd.	Allentown	PA	18105	(610) 402-8000
F-39139	KHINE, Myintzu	1026 Wyoming Ave	Wyoming	PA	18644	(570) 693-3997
EE-796	NGE, Htay Htay	23 Coventry Shoppers Park	Coventry	RI	2818	(401) 615-9975
BB-024	SHADAU, Dinu	550 Pontiac Ave.	Cranston	RI	2910	(401) 270-0887
Q-085	SOE, Nang Ohmar	1000 Division Rd	East Greenwich	RI	2818	(401) 558-0190
F-35481	KYUE, Hla Myint	105 Gate Road	North Kingstown	RI	2852	(401) 295-0019
Q-335	NYI, Nyi	125 Tower Hill Road	North Kingstown	RI	2852	(401) 268-3991
Q-938	MA, Kimberly Paochen	371 Putnam Pike	Smithfield	RI	2917	(401) 231-1620
CD-722	HPAU JAN, Brang Saing	18 Airport Road	Warwick	RI	2889	(401) 738-8300
FF-002	MYINT, Cho Cho	1516 E. St. Patrick St	Rapid City	SD	57703	(605) 343-4326
W-366	LIAN, Hau Suan	1 Lockheed Martin blvd	Fort Worth	TX	76108	(310) 535-3500
F-37180	HAU, Dim Deih	2103 CityWest Blvd.	Houston	TX	77042	(281) 822-3800
F-36626	Aung, Wai Wai	950 S George Mason Dr.	Arlington	VA	22204	(571) 384-1610
F-38657	SU, Myat The	8200 Crestwood Heights Dr.	McLean	VA	22102	(703) 448-0132
DD-714	BAWI, Thla	10201 SE 240th	Kent	WA	98031	(253) 859-5500
CC-305	VAN, Thao T	17667 NE 76th Street	Redmond	WA	98052	(425) 556-8000

If you buy this franchise, your contact information may be disclosed to other buyers when you leave the franchise system.

Wild Blue Food Service Counters
Franchise List
As of March 31, 2026

Operator Name	Store Name	Mailing Address 1	Mailing City	Mailing State	Mailing Zip	Phone Number
KWAG, Giljong	Northern Arizona University	1050 S. Knoles Drive	Flagstaff	AZ	86011	(928) 523-3975
AYE, Ko Thein	Arizona State Univ-West	4701 W Thunderbird Road	Glendale	AZ	85306	(602) 543-5000
MAUNG, Win Htwe	ASU Poly	5999 S. Backus Mall	Mesa	AZ	85212	(480) 727-1585
AUNG, Zay Zay	Arizona State Univ	120 East Taylor Street	Phoenix	AZ	85004	(602) 614-7765
MUANG, Cin Za	Grand Canyon University	3300 West Camelback Road	Phoenix	AZ	85017	(602) 639-7500
NA, Hyeon Mi	Cabrillo College	6500 Soquel Drive	Aptos	CA	95003	(408) 460-0199
ZAYAR, Nai	Humboldt State University (Wild Blue)	355 Granite Ave	Arcata	CA	95521	(707) 826-3011
LEE, Moonhee	Cal State Fullerton	1509 East Campus Drive	Fullerton	CA	92834	(657) 278-1661
THANG, Ngun	Cal State East Bay	25800 Carlos Bee Blvd.	Hayward	CA	94542	(510) 885-4791
SEO, Byung Mo	Cal State University Northridge	18111 Nordhoff St.	Northridge	CA	91330	(818) 677-1200
SUSANTO, Cathrine Cahya	Northeastern University (Mills College)	5000 MacArthur Blvd.	Oakland	CA	94613	(510) 430-2255
NOOKJUN, Supawatchara	CSU San Bernardino	5500 University Parkway	San Bernardino	CA	92407	(909) 537-5000
YAN, Shang Xiuzi	San Jose State Uni - Student Union 3	211 S. 9th Street	San Jose	CA	95192	(408) 924-1000
MAY, Kyu Kyu	San Jose State Uni - Student Union 2	211 S. 9th Street	San Jose	CA	95192	(408) 924-1000
PAING, Khin Ei Ei	San Jose State Uni - Ginger Market	Paseo de San Carlos	San Jose	CA	95112	(408) 924-1000
SAN, Tin	Santa Clara University	301 Market St.	Santa Clara	CA	95053	(408) 389-9380
THET, Naing	Cal State Monterey Bay	3118 Inter-Garrison Rd	Seaside	CA	93955	(831) 582-3000
HTIN, Henry	Cal State University Stanislaus	1 University Cir	Turlock	CA	95382	(209) 667-3666
NAWL, Zion Za	Colorado Mesa University	1100 North Avenue	Grand Junction	CO	81501	(970) 248-1020
MOE, Aung Soe	The Catholic University of America	620 Michigan Ave NE	Washington	DC	20064	(202) 319-5000
HTOO, Hser Tha You	Stetson University	421 N Woodland Blvd	Deland	FL	32723	(386) 822-7000
ZAW, Yaw	University of South Florida	4103 USF Cedar Cir.	Tampa	FL	33620	(813) 974-3180
SHEMZA, Meerya	Rollins College	1000 Holt Ave	Winter Park	FL	32789	(407) 646-2000
GUO, Jenny Qiaodan	University of North Georgia	82 College Cir	Dahlonega	GA	30597	(678) 717-3639
CING, Dim Sian Lawh	Boise State University	1910 University Dr.	Boise	ID	83725	(208) 426-1437
RUAN, Yun F.	University of Illinois Chicago	828 S. Wolcott Ave	Chicago	IL	60612	(312) 996-7000
CHEN, Dingnan	Indiana University	900 East Seventh Street	Bloomington	IN	47405	(812) 855-4848
CHAN, Steven Samuel	Loyola (C-store)	6363 Saint Charles Ave. BOX 243	New Orleans	LA	70118	(504) 865-2014
HMUNG, Pyang Van	Tulane University	31 McAlister Drive	New Orleans	LA	70118	(504) 865-5294
SUNNY, Seng	Simmons College	300 The Fenway	Boston	MA	02115	(617) 521-2000
XU, Hanchen	MIT-Market Place	84 Massachusetts Ave	Cambridge	MA	02139	(617) 253-1000
XU, Han Qing	MIT-Sloan School	100 Main Market Place	Cambridge	MA	02139	(617) 324-1668
MAUNG, Shan Y	Western New England University	1215 Wilbraham Road	Springfield	MA	01119	(413) 782-3111
BIAN, Chao	Brandeis University	415 South St.	Waltham	MA	02453	(781) 736-2000
MAUNG, Soe Lwin	Worcester Polytech Institute	24 Boynton St.	Worcester	MA	01605	(508) 831-5000
WOSE, Xirao	Worcester State University	486 Chandler St	Worcester	MA	01602	(508) 752-1118
SU, Ma Su	Michigan Tech University	1400 Townsend Drive	Houghton, MI	MI	49931	(906) 476-1885
LI, Yun	Oakland University (Wild Blue)	312 Meadow Brook Road	Rochester	MI	48309	(248) 370-2100
THAO, Tong	University of Minnesota Twin Cities	300 Washington Ave SE	Minneapolis	MN	55455	(612) 625-5000
YANG, Mai Yia	St. Catherine's University	2004 Randolf Ave	St. .Paul	MN	55105	(651) 690-8719
SAN, Kaung	Lindenwood University	209 S Kingshighway St.	St. Charles	MO	63301	(636) 949-2000
MON, Myat Myat	University of Central Missouri	511 South Holden Street	Warrensburg	MO	64093	(660) 543-4174
CHUM, Ngun	University of North Carolina, Charlotte	9201 University City Blvd	Charlotte	NC	28223	(704) 687-8622
FACHHAI, Zan Thang	Davidson College	405 N Main Street	Davidson	NC	28035	(336) 698-5945
Mawi, Sui Hlawn	Elon University	100 Dalton McMichael Dr.	Elon	NC	27244	(336) 278-5333
HUNG KUNG, Zaw Win	North Carolina A&T State University	1601 E. Market Street	Greensboro	NC	27411	(336) 455-6171
CHO, San	High Point University	833 Montlieu Ave	High Point	NC	27262	(800) 345-6993
HUM, Roy Van Bawi	Campbell University	445 Leslie Campbell Ave	Lillington	NC	27546	(910) 893-1536
SAI, Soe Win	University of NC @ Wilmington	601 South College Rd.	Wilmington	NC	28403-5909	(910) 962-3000
LWIN, Chit Su	Montclair University	1 Normal Ave	Montclair	NJ	07043	(973) 655-4036
KYAW, Tin Maung Lat	New Mexico State Un	1600 International Mall	Las Cruces	NM	88003	(575) 646-0111
NYANPHAY, Aung Oo	Albany College of Pharmacy & Health	106 New Scotland Ave	Albany	NY	12208	(518) 694-7349
AUNG, Naing W.	State University NY - Plattsburg	101 Broad St	Plattsburg	NY	12901	(518) 564-2000
HTING NAN, Brang Nan	Monroe Community College	1000 E. Henrietta Road	Rochester	NY	14623	(585) 292-2513
TUN NAING, Si Thu	Union College	807 Union Street	Schenectady	NY	12308	(518) 388-6000
AUNG, Nwe Nwe	Rensselaer Polytechnic Institute	15th Street and Sage Ave.	Troy	NY	12180	(518) 276-6000
XUE, Ying	Columbus Community College	283 Cleveland Ave	Columbus	OH	43215	(614) 287-5353
MANG, Suan Kham	University of Tulsa	440 South Gary	Tulsa	OK	74104	(918) 631-2000
PAR, Di Cim	PennWest California	250 University Ave	California	PA	15419	(724) 938-4000
THET, Aye A	DeSales University	2755 Station Ave	Center Valley	PA	18034	(610) 282-1100
WANG, Wenpan	Drexel University	3330 Market Street	Philadelphia	PA	19148	(215) 895-2000
SAING, Ponnyar	Carnegie Mellon University (Wild Blue)	4765 Forbes Ave	Pittsburgh	PA	15213	(626) 421-9606
SANG, Zo Nun	Slippery Rock University	200 Campus Drive	Slippery Rock	PA	16057	(800) 778-9111
MARIP, Ah Shim	Roger Williams University	1 Old Ferry Rd.	Bristol	RI	02809	(401) 254-3735
MANG, Rebeccayex Khuat	Lipscomb University	1 University Park Drive	Nashville	TN	37204	(615) 966-1000
LUN, Vung T	St. Edwards University	3001 S. Congress Ave	Austin	TX	78704	(512) 448-8400
SENG, Thkunmin	Texas A&M University	600 West Campus Blvd	College Station	TX	77843	(979) 458-1826
LIAN, Hram Hmun	University of North Texas	1155 Union Circle	Denton	TX	76203	(940) 565-2000
KHAI, Hau Cin	Univ of Houston (Main)	4700 CALHOUN RD	Houston	TX	77204	(713) 743-2255
KHAI, Hau Cin	Univ of Houston Clear Lake	2700 Bay Area Blvd	Houston	TX	77058	(713) 221-8000
CHOIE, Salai Thang	Sam Houston State University - Texas	1802 Avenue I	Huntsville	TX	77340	(936) 294-1111
LABYA, La Seng	University of TX @ Dallas	2601 N . Floyd Rd. (SU-23)	Richardson	TX	75080	(972) 883-2111
CIAKIP, Tluang Hnin	Angelo State University	11052 ASU Station	San Angelo	TX	76909	(325) 942-2555
CIN, Sui	Weber State University	2115 University Circle	Ogden	UT	84408	(801) 626-6000
LIN, Maung Htin	University of Utah	200 South Central Campus Drive	Salt Lake City	UT	84112	(801) 581-7200
TANG BAU, Ya Ku	James Madison University	395 South High Street	Harrisonburg	VA	22801	(540) 568-4543
TANG BAU, Ya Ku	James Madison Univ	800 S. Main Street	Harrisonburg	VA	22807	(540) 568-6211
OO, Min Hlaing	University of Vermont	590 Main St	Burlington	VT	05405	(802) 656-3131
LIAN, Za	Seattle University	901 12AVE	Seattle	WA	98122	(206) 296-6000
BO, Nai Bo Rot Mon	St. Norbert College	100 Grant St.	De Pere	WI	54115	(920) 403-3156
KYAW, Aung Khaing	University of Wisconsin - Whitewater	235 Graham Ave	Whitewater	WI	53190	(262) 472-1234

If you buy this franchise, your contact information may be disclosed to other buyers when you leave the franchise system.

WIld Blue Food Service Counters
Company Owned Locations
As of March 31, 2026

Operator Code	Mailing Address 1	Mailing Address 2	Mailing City	Mailing State	Mailing Zip	Phone Number
AFCFC	168 Grove Street	Schwarzman Center	New Haven	CT	06511	(203) 436-9127

Wild Blue Food Service Counters
List of Franchisees Who Transferred
As of March 31, 2026

FC Name	Address	City	State	Zip	Phone
VANG, Payee	1437 Pacific St.	Minnesota	MN	55106 - 6512	(651) 855-8735
YANG, Khoua	1711 East California Ave.	Minnesota	MN	55106 - 1306	(651) 361-0038
MARTIN, SAM	9405 40th Dr.	New York	NY	11373	(347) 239-1154
Lian, Hrang Za	230 E Water St Apt#6	Pennsylvania	PA	16057	(317) 435-3673

If you buy this franchise, your contact information may be disclosed to other buyers when you leave the franchise system.

Wild Blue Food Service Counters
Terminated List
As of March 31, 2026

Franchisee Name	Address	City	State	Zip	Phone
THAWNG LIAN, Melvin Ngun	637 Hillsboro St APT 8	Pittsburgh	PA	15204-1772	(954) 881-3313
THAWNG LIAN, Melvin Ngun	637 Hillsboro St APT 8	Pittsburgh	PA	15204-1772	(954) 881-3313
THAWNG LIAN, Melvin Ngun	637 Hillsboro St APT 8	Pittsburgh	PA	15204-1772	(954) 881-3313
THAWNG LIAN, Melvin Ngun	637 Hillsboro St APT 8	Pittsburgh	PA	15204-1772	(954) 881-3313
THAWNG LIAN, Melvin Ngun	637 Hillsboro St APT 8	Pittsburgh	PA	15204-1772	(954) 881-3313

If you buy this franchise, your contact information may be disclosed to other buyers when you leave the franchise system.

Wild Blue Food Service Counters
List of Franchises Reacquired by Franchisor
As of End of March 31, 2026

Franchisee Name	Address	City	State	Zip	Phone
None	None				

If you buy this franchise, your contact information may be disclosed to other buyers when you leave the franchise system.

Wild Blue Food Service Counters
Non-Renewal List
As of March 31, 2026

Franchisee Name	Address	City	State	Zip	Phone
N/A	N/A	N/A	N/A	N/A	N/A

If you buy this franchise, your contact information may be disclosed to other buyers when you leave the franchise system.

Wild Blue Food Service Counters
Ceased Operations
As of March 31, 2026

Operator Name	Mailing Address 1	Mailing City	Mailing State	Mailing Zip	Operator Cell
AUNG, Baby	350 Student Center Cir	Mobile	AL	36688	(910) 859-4216
YU, Tianshu	11340 South St (B)	Cerritos	CA	90703	(626) 560-4947
XIAO, Xiang	5425 Sunrise Blvd	Citrus Heights	CA	95610	(916) 952-8828
TUN, Saw Thant Zin	7530 Elk Grove Blvd	Elk Grove	CA	95757	(916) 923-8510
KHAING, Myo Myo	16325 Ventura Blvd	Encino	CA	91436	(626) 872-7517
NOOKJUN, Supawatchara	16173 S Highland Avenue	Fontana	CA	92336	(626) 297-9099
MA, Kun	1100 S Harbor Blvd	Fullerton	CA	92832	(661) 699-6773
KIM, Taeho	6911 Warner Ave	Huntington Beach	CA	92647	(714) 313-1057
SOE, Maung Min	13672 Jamboree Rd	Irvine	CA	92602	(716) 909-7304
XIANG, Fengkai	6235 E Spring St	Long Beach	CA	90808	(408) 338-8329
SHWE, Theingi	6855 S La Cienega Blvd	Los Angeles	CA	90045	(213) 423-8382
JI, Young Chel	742 E Los Angeles Ave	Moorpark	CA	93021	(657) 456-3065
PUANGCHAN, Phatsany Nina	40481 Murrieta Hot Springs Rd	Murrieta	CA	92563	(951) 552-0594
SOE, Steve	3425 E Colorado Blvd	Pasadena	CA	91107	(626) 278-2853
NANG, Nang	14837 Pomerado Road	Poway	CA	92064	(910) 523-2844
LIANG, Jingqiang	6780 Stanford Ranch Road	Roseville	CA	95678	(510) 990-4726
WIN, Kyaw Zin Lat	140 Promenade Way	Thousand Oaks	CA	91362	(720) 671-9402
ZHANG, Qiang	21035 Hawthorne Blvd	Torrance	CA	90503	(626) 320-3621
LAU, James Pak-Kit	15225 Whittier Blvd	Whittier	CA	90603	(714) 948-3889
AUNG, Hnin Sandar	6245 Topanga Canyon Blvd	Woodland Hills	CA	91367	(808) 343-3222
AUNG , Yu Khine	114 Fletcher Dr.	Gainesville	FL	32611	(352) 359-3866
HMUNG, Nelson	404 W Army Trail Rd	Bloomingdale	IL	60188	(331) 871-2041
ENG, Sung	1351 E Ogden Ave	Naperville	IL	60563	(773) 673-7623
LIAN, Bawi Tha	3116 S. Route 59th	Naperville	IL	60564	(630) 974-8240
ENG, Za	7229 West 24th St.	North Riverside	IL	90546	(331) 218-8404
SWE, Min	16 East Golf Road	Schaumburg	IL	60016	(773) 999-8425
ZA, Van Lal Cung	104 Ellendale-NSU Dr.	Thibodaux	LA	70310	(985) 414-9821
PAU ZA TUANG, Patrick	12263 PROSPERITY DRIVE	Silver Spring	MD	20904	(443) 447-8891
SENG, Htoi	17 Arnold Grobman Dr.	St. Louis	MO	63121	(314) 495-1803
THANG, Kaam Sian	220 N Camden RD	Wingate	NC	28174	(704) 390-3431
OO, Nilar	40 Rowland Ave, Spring	Delaware	OH	43015	(614) 354-5355
WU, Eric	1075 Risman Drive	Kent	OH	44242	(440) 969-0750
THAWNG LIAN, Melvin Ngun	3301 Fifth Ave	Pittsburgh	PA	15213	
KHAI, Hau Cin	1 Main St	Houston	TX	77002	(346) 308-3511
DEMBEREL, Buyanbaatar	3801 Richmond Hwy	Alexandria	VA	22305	(703) 599-6793
HA, Yong Hui	1301 Carrier Dr.	Harrisonburg	VA	22807	(443) 303-7167
MAWII, Lal Hming	1701 S Commons	Federal Way	WA	98003	(206) 953-3687

If you buy this franchise, your contact information may be disclosed to other buyers when you leave the franchise system.

EXHIBIT N

LIST OF STATE ADMINISTRATORS AND AGENTS FOR SERVICE OF PROCESS

LIST OF STATE ADMINISTRATORS AND STATE AGENTS FOR SERVICE OF PROCESS

STATE	STATE ADMINISTRATOR	AGENT FOR SERVICE OF PROCESS
CALIFORNIA	Department of Financial Protection and Innovation 320 West 4th Street, Suite 750 Los Angeles, California 90013 (213) 576-7500 (866) 275-2677 website:www.dfpi.ca.gov email: Ask.DFPI@dfpi.ca.gov	California, Commissioner of Financial Protection and Innovation 320 West 4th Street, Suite 750 Los Angeles, California 90013 (213) 576-7500 (866) 275-2677 website:www.dfpi.ca.gov email: Ask.DFPI@dfpi.ca.gov
HAWAII	Business Registration Division Department of Commerce and Consumer Affairs 335 Merchant Street Room 203 Honolulu, Hawaii 96813 (808) 586-2722	Commissioner of Securities, Department of Commerce & Consumer Affairs 335 Merchant Street Room 203 Honolulu, Hawaii 96813 (808) 586-2722
ILLINOIS	Franchise Bureau Office of the Attorney General 500 South Second Street Springfield, Illinois 62701 (217) 782-4465	Franchise Bureau Office of the Attorney General 500 South Second Street Springfield, Illinois 62701 (217) 782-4465
INDIANA	Indiana Secretary of State Securities Division 302 West Washington Street, Room E-111 Indianapolis, Indiana 46204 (317) 232-6681	Indiana Secretary of State 201 State House 200 West Washington Street Indianapolis, Indiana 46204 (317) 232-6531
MARYLAND	Office of the Attorney General Securities Division 200 St. Paul Place Baltimore, Maryland 21202-2021 (410) 576-6360	Maryland Securities Commissioner Office of the Attorney General Securities Division 200 St. Paul Place Baltimore, Maryland 21202-2021 (410) 576-6360
MICHIGAN	Michigan Department of Attorney General Consumer Protection Attn: Franchise Section 525 West Ottawa Street G. Mennen Williams Building, 1st Floor Lansing, Michigan 48933 (517) 335-7567	Michigan Department of Commerce Corporations and Securities Bureau P.O. Box 30054 6546 Mercantile Way Lansing, Michigan 48909 (517) 241-6345
MINNESOTA	Minnesota Department of Commerce 85 7th Place East, Suite 280 St. Paul, Minnesota 55101-2198 (651) 539-1600	Commissioner of Commerce Minnesota Department of Commerce 85 7th Place East, Suite 280 St. Paul, Minnesota 55101-2198 (651) 539-1600
NEBRASKA	Nebraska Department of Banking and Finance Bureau of Securities/Financial Institutions Division 1526 K Street, Suite 300 Lincoln, Nebraska 68508-2723 (402) 471-2171	Nebraska Department of Banking and Finance Bureau off Securities/Financial Institutions Division 1526 K Street, Suite 300 Lincoln, Nebraska 68508-2723 (402) 471-2171

STATE	STATE ADMINISTRATOR	AGENT FOR SERVICE OF PROCESS
NEW YORK	NYS Department of Law Investor Protection Bureau 28 Liberty Street, 21st Fl New York, New York 10005 (212) 416-8285 (Phone) (212) 416-6042 (Fax)	New York Department of State One Commerce Plaza 99 Washington Avenue, 6th Floor Albany, New York 12231-0001 (518) 473-2492
NORTH DAKOTA	North Dakota Insurance & Securities Department 600 East Boulevard Avenue Bismarck, North Dakota 58505-0510 (701) 328-2910	North Dakota Insurance Commissioner 600 East Boulevard Avenue Bismarck, North Dakota 58505-0510 (701) 328-2910
RHODE ISLAND	Securities Division State of Rhode Island Department of Business Regulation, Bldg. 69, First Floor John O. Pastore Center 1511 Pontiac Avenue, Cranston, Rhode Island 02920 (401) 462-9582	Director, Securities Division Department of Business Regulation Bldg. 69, First Floor John O. Pastore Center 1511 Pontiac Avenue, Cranston, Rhode Island 02920 (401) 462-9582
SOUTH DAKOTA	Department of Labor and Regulation Division of Insurance Securities Regulation 124 South Euclid, Suite 104 Pierre, South Dakota 57501 (605) 773-3563	Director, Department of Labor and Regulation Division of Insurance Securities Regulation 124 South Euclid, Suite 104 Pierre, South Dakota 57501 (605) 773-3563
VIRGINIA	State Corporation Commission Division of Securities and Retail Franchising 1300 East Main Street, First Floor Richmond, Virginia 23219 (804) 371-9051	Clerk of the State Corporation Commission 1300 East Main Street, First Floor Richmond, Virginia 23219 (804) 371-9733
WASHINGTON	Securities Division Department of Financial Institutions P.O. Box 41200 Olympia, Washington 98504-1200 (360) 902-8760	Director, Department of Financial Institutions Securities Division 150 Israel Road S.W. Tumwater, Washington 98501 (360) 902-8760
WISCONSIN	Franchise Registration Division of Securities Wisconsin Department of Financial Institutions 201 West Washington Avenue, Suite 300 Madison, Wisconsin 53703 (608) 266-1064	Securities and Franchise Registration Wisconsin Securities Commission 201 West Washington Avenue, Suite 300 Madison, Wisconsin 53703 (608) 266-1064

EXHIBIT O

STATE SPECIFIC ADDENDA

STATE SPECIFIC DISCLOSURE REQUIREMENTS

The laws of several states require that we provide this Franchise Disclosure Document to you at the following earlier dates:

1. Iowa requires that we give you this disclosure document at the earlier of the first personal meeting or 14 calendar-days before the execution of the franchise or other agreement or the payment of any consideration that relates to the franchise relationship.

2. New York requires that we give you a copy of this Franchise Disclosure Document at the earlier of the first personal meeting or 10 business days before the execution of the franchise or other agreement or the payment of any consideration that relates to the franchise relationship.

3. Michigan requires that we give you this Franchise Disclosure Document at least 10 business days before the execution of any binding franchise or other agreement or the payment of any consideration, whichever occurs first.

For franchises that we sell for locations in CALIFORNIA, HAWAII, ILLINOIS, MARYLAND, MICHIGAN, MINNESOTA, NEW YORK, NORTH DAKOTA, RHODE ISLAND, VIRGINIA and WASHINGTON, applicable state law requires us to disclose additional information. Please refer to the separate state addendum pages in this Exhibit for the additional disclosures that may apply to you.

ADDENDUM TO THE ADVANCED FRESH CONCEPTS FRANCHISE CORP.
FRANCHISE DISCLOSURE DOCUMENT - REQUIRED BY THE STATE OF CALIFORNIA

The California Franchise Investment Law requires a copy of all proposed agreements relating to the sale of the franchise to be delivered together with the Franchise Disclosure Document 14 days prior to execution of any agreement.

Neither Advanced Fresh Concepts Franchise Corp, nor any person or franchise broker in item 2 of the Franchise Disclosure Document is subject to any currently effective order of any National Securities Association or National Securities Exchange, as defined in the Securities Exchange Act of 1934, 15 U.S.C.A. 78a et seq., suspending or expelling these persons from membership in this association or exchange.

You must sign a general release if you renew or transfer your franchise. California Corporations Code §31512 voids a waiver of your rights under the Franchise Investment Law (California Corporations Code §§31000 through 31516). Business and Professions Code §20010 voids a waiver of your rights under the Franchise Relations Act (Business and Professions Code §§20000 through 20043).

The California Business and Professions Code Sections 20000 through 20043 provide rights to the Franchisee concerning termination, transfer or non-renewal of a franchise. If the Franchise Agreement contains a provision that is inconsistent with the law, the law will control.

The Franchise Agreement provides for termination upon bankruptcy. This provision may not be enforceable under Federal Bankruptcy Law (11 U.S.C.A. sec. 101 et. seq.).

The Franchise Agreement contains a covenant not to compete which extends beyond the termination of the franchise. This provision may not be enforceable under California law.

The Franchise Agreement requires binding arbitration. The arbitration will occur in Los Angeles, California, according to the rules of the American Arbitration Association, with attorneys' fees being borne by the losing party.

Section 31125 of the Franchise Investment Law requires us to give to you a Disclosure Document approved by the Commissioner of Department of Financial Protection and Innovation before we ask you to consider a material modification of your Franchise Agreement.

Our website 'www.afcsushi.com' has not been reviewed or approved by the California Department of Financial Protection and Innovation. Any complaints concerning the contents of this website may be directed to the California Department of Financial Protection and Innovation at www.dfpi.ca.gov.

The Franchise Agreement contains a liquidated damages clause. Under California Civil Code Section 1671, certain liquidated damages are unenforceable.

No statement, questionnaire, or acknowledgement signed or agreed to by a franchisee in connection with the commencement of the franchise relationship shall have the effect of (i) waiving any claims under any applicable state franchise law, including fraud in the inducement, or (ii) disclaiming reliance on any statement made by any franchisor, franchise seller, or other person acting on behalf of franchisor. This provision supersedes any other term of any document executed in connection with the franchise.

California's Franchise Investment Law (Corporations Code sections 31512 and 31512.1):

Any provision of a franchise agreement or related document requiring the franchisee to waive specific provisions of the law is contrary to public policy and is void and unenforceable. The law also prohibits a franchisor from disclaiming or denying (i) representations it, its employees, or its agents make to you, (ii) your ability to rely on any representations it makes to you, or (iii) any violations of the law.

You will not receive an exclusive territory. You may face competition from other franchisees, from outlets that we own, or from other channels of distribution or competitive brands that we control.

California enacted California Labor Code Sections 1474, 1475 and 1476, to provide for a state-wide increase in the minimum wage for fast food restaurant employees to $20 per hour effective as of April 1, 2024, the creation of a Fast Food Council, and changes to employment standards in the fast-food restaurant industry. The new law applies to employees in national fast-food chains, which includes Zenshi Counters/AFC Food Service Counters/Wild Blue Counters.

The registration of this franchise does not constitute approval, recommendation, or endorsement by the commissioner of the California Department of Financial Protection and Innovation.

ADDENDUM TO THE ADVANCED FRESH CONCEPTS FRANCHISE CORP.
FRANCHISE AGREEMENT – CALIFORNIA

For the purposes of Cal. Bus. & Prof. Code Section 20022, Franchisor and Franchisee agree that:

1. The parties will use the declining-balance depreciation method to calculate the value of Franchisee's assets (inventory, supplies, equipment, fixtures, and furnishings) for the purposes of a purchase by Franchisor under Section 20022. The purchase price by Franchisor for these assets will not include the cost of removal and transportation of those assets, which will be Franchisee's responsibility.

2. For purposes of Section 20022, franchisee is not able to provide to Franchisor "clear title and possession" to Franchisee's assets if those assets are subject to liens or encumbrances including: (i) purchase money security interests; (ii) blanket security interests; (iii) rights of first refusal; (iv) liens by Franchisee's landlord; or (v) tax liens.

3. For the purposes of Section 20022(h), Franchisor's right of offset will include the following amounts owed by Franchisee to Franchisor or Franchisor's affiliates: (i) compensation to franchisor; (ii) marketing fund fees (if applicable); (iii) liquidated damages; (iv) transfer fees; and (v) any other type of fee or amounts owed by Franchisee to Franchisor or Franchisor's affiliates.

For the purposes of Cal. Bus. & Prof. Code Section 20035, Franchisor and Franchisee agree that:

1. **"Fair market value of the franchise assets"** means the value of Franchisee's assets, valued according to the declining-balance method of depreciation. The purchase price by franchisor for the assets will not include the cost of removal and transportation of those assets, which will be Franchisee's responsibility.

2. **"Fair market value of the franchised business"** means the **"fair market value of the franchise assets**" as defined above, plus goodwill. The parties agree that the value of goodwill is the amount of compensation to Franchisor paid by franchisee pursuant to the Franchise Agreement and any applicable addenda within the twelve (12) month period immediately before franchisor's termination or failure to renew if Franchisor is in violation of the California Franchise Relations Act.

No statement, questionnaire, or acknowledgement signed or agreed to by a franchisee in connection with the commencement of the franchise relationship shall have the effect of (i) waiving any claims under any applicable state franchise law, including fraud in the inducement, or (ii) disclaiming reliance on any statement made by any franchisor, franchise seller, or other person acting on behalf of franchisor. This provision supersedes any other term of any document executed in connection with the franchise.

California's Franchise Investment Law (Corporations Code sections 31512 and 31512.1):

Any provision of a franchise agreement or related document requiring the franchisee to waive specific provisions of the law is contrary to public policy and is void and unenforceable. The law also prohibits a franchisor from disclaiming or denying (i) representations it, its employees, or its agents make to you, (ii) your ability to rely on any representations it makes to you, or (iii) any violations of the law.

For the purposes of Cal. Code Regs. Tit. 10, § 310.114.1, Franchisor and Franchisee agree that:

a. The California Franchise Investment Law requires a copy of all proposed agreements relating to the sale of the franchise to be delivered together with the Disclosure Document 14 days prior to execution of any agreement.

b. California Business and Professions Code Sections 20000 through 20043 provide rights to the franchisee concerning termination, transfer or non-renewal of a franchise. If the Franchise Agreement contains a provision that is inconsistent with the law, the law will control.

c. The Franchise Agreement provides for termination upon bankruptcy. This provision may not be enforceable under Federal Bankruptcy Law (11 U.S.C.A. sec. 101 et. Seq.).

d. The Franchise Agreement contains a covenant not to compete which extends beyond the termination of the franchise. This provision may not be enforceable under California law.

e. If the Franchise Agreement contains a liquidated damages clause. Under California Civil Code Section 1671, certain liquidated damages are unenforceable.

f. The Franchise Agreement requires the parties to resolve all disputes through arbitration in Los Angeles, California, with the costs being borne by the losing party.

Dated this _____ day of _____ 20___.

FRANCHISEE	FRANCHISOR
_____	ADVANCED FRESH CONCEPTS FRANCHISE CORP.
Signature: _____	By: _____
Print Name: _____	Print Name: _____

DISCLOSURES REQUIRED BY HAWAII

THESE FRANCHISES WILL BE/HAVE BEEN FILED UNDER THE FRANCHISE INVESTMENT LAW OF THE STATE OF HAWAII. FILING DOES NOT CONSTITUTE APPROVAL, RECOMMENDATION OR ENDORSEMENT BY THE DIRECTOR OF COMMERCE AND CONSUMER AFFAIRS OR A FINDING BY THE DIRECTOR OF COMMERCE AND CONSUMER AFFAIRS THAT THE INFORMATION PROVIDED HEREIN IS TRUE, COMPLETE AND NOT MISLEADING.

THE FRANCHISE INVESTMENT LAW MAKES IT UNLAWFUL TO OFFER OR SELL A FRANCHISE IN THIS STATE WITHOUT FIRST PROVIDING THE PROSPECTIVE FRANCHISEE, OR SUBFRANCHISOR AT LEAST SEVEN DAYS PRIOR TO THE EXECUTION BY THE PROSPECTIVE FRANCHISEE OF ANY BINDING FRANCHISE OR OTHER AGREEMENT, OR AT LEAST SEVEN DAYS PRIOR TO THE PAYMENT OF ANY CONSIDERATION BY THE FRANCHISEE, OR SUBFRANCHISOR, WHICHEVER COMES FIRST, A COPY OF THE FRANCHISE DISCLOSURE DOCUMENT, TOGETHER WITH A COPY OF ALL PROPOSED AGREEMENTS RELATING TO THE SALE OF A FRANCHISE.

THIS FRANCHISE DISCLOSURE DOCUMENT CONTAINS A SUMMARY ONLY OF CERTAIN MATERIAL PROVISIONS OF THE FRANCHISE AGREEMENT. THE CONTRACT OR AGREEMENT SHOULD BE REFERRED TO FOR A STATEMENT OF ALL RIGHTS, CONDITIONS, RESTRICTIONS AND OBLIGATIONS OF BOTH THE FRANCHISOR AND THE FRANCHISEE.

NO STATEMENT, QUESTIONNAIRE, OR ACKNOWLEDGEMENT SIGNED OR AGREED TO BY A FRANCHISEE IN CONNECTION WITH THE COMMENCEMENT OF THE FRANCHISE RELATIONSHIP SHALL HAVE THE EFFECT OF (I) WAIVING ANY CLAIMS UNDER ANY APPLICABLE STATE FRANCHISE LAW, INCLUDING FRAUD IN THE INDUCEMENT, OR (II) DISCLAIMING RELIANCE ON ANY STATEMENT MADE BY ANY FRANCHISOR, FRANCHISE SELLER, OR OTHER PERSON ACTING ON BEHALF OF FRANCHISOR. THIS PROVISION SUPERSEDES ANY OTHER TERM OF ANY DOCUMENT EXECUTED IN CONNECTION WITH THE FRANCHISE.

ADDENDUM TO THE ADVANCED FRESH CONCEPTS FRANCHISE CORP.
FRANCHISE DISCLOSURE DOCUMENT - REQUIRED BY THE STATE OF ILLINOIS

By reading this disclosure document, you are not agreeing to, acknowledging, or making any representations whatsoever to the Franchisor and its affiliates.

Illinois law governs the agreements between the parties to this franchise.

Section 4 of the Illinois Franchise Disclosure Act provides that any provision in a franchise agreement that designates jurisdiction or venue outside the State of Illinois is void. However, a franchise agreement may provide for arbitration outside of Illinois.

Section 41 of the Illinois Franchise Disclosure Act provides that any condition, stipulation or provision purporting to bind any person acquiring any franchise to waive compliance with the Illinois Franchise Disclosure Act or any other law of Illinois is void.

Your rights upon termination and non-renewal of a franchise agreement are set forth in sections 19 and 20 of the Illinois Franchise Disclosure Act.

No statement, questionnaire, or acknowledgement signed or agreed to by a franchisee in connection with the commencement of the franchise relationship shall have the effect of (i) waiving any claims under any applicable state franchise law, including fraud in the inducement, or (ii) disclaiming reliance on any statement made by any franchisor, franchise seller, or other person acting on behalf of franchisor. This provision supersedes any other term of any document executed in connection with the franchise.

ADDENDUM TO THE ADVANCED FRESH CONCEPTS FRANCHISE CORP.
FRANCHISE AGREEMENT - REQUIRED BY THE STATE OF ILLINOIS

Illinois law governs the agreements between the parties to this franchise.

Section 4 of the Illinois Franchise Disclosure Act provides that any provision in a franchise agreement that designates jurisdiction or venue outside the State of Illinois is void. However, a franchise agreement may provide for arbitration outside of Illinois.

Section 41 of the Illinois Franchise Disclosure Act provides that any condition, stipulation or provision purporting to bind any person acquiring any franchise to waive compliance with the Illinois Franchise Disclosure Act or any other law of Illinois is void.

Your rights upon termination and non-renewal of a franchise agreement are set forth in sections 19 and 20 of the Illinois Franchise Disclosure Act.

No statement, questionnaire, or acknowledgement signed or agreed to by a franchisee in connection with the commencement of the franchise relationship shall have the effect of (i) waiving any claims under any applicable state franchise law, including fraud in the inducement, or (ii) disclaiming reliance on any statement made by any franchisor, franchise seller, or other person acting on behalf of franchisor. This provision supersedes any other term of any document executed in connection with the franchise.

Dated this _____ day of _____ 20___.

FRANCHISEE	FRANCHISOR
_____	ADVANCED FRESH CONCEPTS FRANCHISE CORP.
Signature: _____	By: _____
Print Name: _____	Print Name: _____
Title: _____	Title: _____

ADDENDUM TO THE ADVANCED FRESH CONCEPTS FRANCHISE CORP.
FRANCHISE DISCLOSURE DOCUMENT - REQUIRED BY THE STATE OF MARYLAND

The following is added to Items 1 and 12 of the Franchise Disclosure Document in Maryland:

> Section 14-226 of the Maryland Franchise Registration and Disclosure Law prohibits us from requiring you to release or waive your rights as a condition of purchasing our franchise.

The following is added to Item 12 of the Franchise Disclosure Document in Maryland:

> The general release required as a condition of relocation will not apply to any liability under the Maryland Franchise Registration and Disclosure Law, unless the relocation is part of an agreement between us to resolve an alleged registration and/or disclosure claim.

The following is added to Item 17(m) of the Franchise Disclosure Document in Maryland:

> The general release required as a condition of transfer will not apply to any liability under the Maryland Franchise Registration and Disclosure Law, unless the transfer is part of an agreement between us to resolve an alleged registration and/or disclosure claim.

The following is added to Item 17(u) of the Franchise Disclosure Document in Maryland:

> You may sue in Maryland for claims arising under the Maryland Franchise Registration and Disclosure Law, to the extent the dispute is neither pre-empted by the Federal Arbitration Act nor governed by the arbitration provisions of Section 16.8 of the Franchise Agreement. Any claims arising under the Maryland Franchise Registration and Disclosure Law must be brought within 3 years after the grant of the franchise.

The following is added to the Franchise Disclosure and Compliance Questionnaire:

> The Franchise Disclosure and Compliance Questionnaire requires prospective franchisees to disclaim the occurrence and/or acknowledge the non-occurrence of acts that would constitute a violation of the Franchise Law. Such representations are not intended to nor shall they act as a release, estoppel or waiver of any liability incurred under the Maryland Franchise Registration and Disclosure Law.

No statement, questionnaire, or acknowledgment signed or agreed to by a franchisee in connection with the commencement of the franchise relationship shall have the effect of (i) waiving any claims under any applicable state franchise law, including fraud in the inducement, or (ii) disclaiming reliance on any statement made by any franchisor, franchise seller, or other person acting on behalf of the franchisor. This provision supersedes any other term of any document executed in connection with the franchise. Any questionnaire and specific Acknowledgments shall not apply to prospective franchisees who are Maryland residents or who seek to purchase a franchise located in Maryland.

ADDENDUM TO THE ADVANCED FRESH CONCEPTS FRANCHISE CORP. FRANCHISE AGREEMENT - REQUIRED BY THE STATE OF MARYLAND

The following is added to Section 3.2 of the Franchise Agreement in Maryland:

> The general release required as a condition of relocation shall not apply to any liability under the Maryland Franchise Registration and Disclosure Law, unless Franchisor's consent to the relocation is part of an agreement between Franchisee and Franchisor to resolve an alleged registration and/or disclosure claim.

The following is added to Section 14.9 of the Franchise Agreement in Maryland:

> The general release required as a condition of transfer shall not apply to any liability under the Maryland Franchise Registration and Disclosure Law, unless Franchisor's consent to the transfer is part of an agreement between Franchisee and Franchisor to resolve an alleged registration and/or disclosure claim.

Section 16.14 is added to the Franchise Agreement in Maryland as follows:

> Nothing in this Agreement is intended to or shall act as a release, estoppel or waiver of any liability incurred under the Maryland Franchise Registration and Disclosure Law.

The following is added to Section 16.8:

> Franchisee may sue in Maryland for claims arising under the Maryland Franchise Registration and Disclosure Law, to the extent the dispute is neither pre-empted by the Federal Arbitration Act nor governed by the arbitration provisions of Section 16.8 of this Agreement. Any claims arising under the Maryland Franchise Registration and Disclosure Law must be brought within 3 years after the grant of the franchise.

No statement, questionnaire, or acknowledgment signed or agreed to by a franchisee in connection with the commencement of the franchise relationship shall have the effect of (i) waiving any claims under any applicable state franchise law, including fraud in the inducement, or (ii) disclaiming reliance on any statement made by any franchisor, franchise seller, or other person acting on behalf of the franchisor. This provision supersedes any other term of any document executed in connection with the franchise. Any questionnaire and specific Acknowledgments shall not apply to prospective franchisees who are Maryland residents or who seek to purchase a franchise located in Maryland.

(SIGNATURE PAGE FOLLOWS)

Dated this _____ day of _____ 20___.

FRANCHISEE	FRANCHISOR
_____	ADVANCED FRESH CONCEPTS FRANCHISE CORP.
Signature: _____	By: _____
Print Name: _____	Print Name: _____
Title: _____	Title: _____

ADDENDUM TO THE FRANCHISE DISCLOSURE DOCUMENT PURSUANT TO THE MICHIGAN FRANCHISE INVESTMENT LAW

THE STATE OF MICHIGAN PROHIBITS CERTAIN UNFAIR PROVISIONS THAT ARE SOMETIMES IN FRANCHISE DOCUMENTS. IF ANY OF THE FOLLOWING PROVISIONS ARE IN THESE FRANCHISE DOCUMENTS, THE PROVISIONS ARE VOID AND CANNOT BE ENFORCED AGAINST YOU.

Each of the following provisions is void and unenforceable if contained in any documents relating to a Franchise:

(a) A prohibition on the right of a Franchisee to join an association of Franchisees.

(b) A requirement that a Franchisee assent to a release, assignment, novation, waiver, or estoppel which deprives a Franchisee of rights and protections provided in this act. This shall not preclude a Franchisee, after entering into a Franchise agreement from settling any and all claims.

(c) A provision that permits a franchisor to terminate a Franchise prior to the expiration of its term except for good cause. Good cause shall include the failure of the Franchisee to comply with any lawful provision of the Franchise agreement and to cure such failure after being given written notice thereof and a reasonable opportunity, which in no event need be more than 30 days, to cure such failure.

(d) A provision that permits a franchisor to refuse to renew a Franchise without fairly compensating the Franchisee by repurchase or other means for the fair market value at the time of expiration of the Franchisee's inventory, supplies, equipment, fixtures, and furnishings. Personalized materials which have no value to the franchisor and inventory, supplies, equipment, fixtures, and furnishing not reasonably required in the conduct of the Franchise business are not subject to compensation. This subsection applies only if: (i) the term of the Franchise is less than 5 years and (ii) the Franchisee is prohibited by the Franchise or other agreement from continuing to conduct substantially the same business under another trademark, service mark, trade name, logotype, advertising, or other commercial symbol in the same area subsequent to the expiration of the Franchise or the Franchisee does not receive at least 6 months advance notice of franchisor's intent not to renew the Franchise.

(e) A provision that permits the franchisor to refuse to renew a Franchise on terms generally available to other Franchisees of the same class or type under similar circumstances. This section does not require a renewal provision.

(f) A provision requiring that arbitration or litigation be conducted outside this state. This shall not preclude the Franchisee from entering into an agreement, at the time of arbitration, to conduct arbitration at a location outside this state.

(g) A provision which permits a franchisor to refuse to permit a transfer of ownership of a Franchise, except for good cause. This subdivision does not prevent a franchisor from exercising a right of first refusal to purchase the Franchise. Good cause shall include, but is not limited to:

(i) The failure of the proposed transferee to meet the franchisor's then-current reasonable qualifications or standards.

(ii) The fact that the proposed transferee is a competitor of the franchisor or subfranchisor.

(iii) The unwillingness of the proposed transferee to agree in writing to comply with all lawful obligations.

(iv) The failure of the Franchisee or proposed transferee to pay any sums owing to the franchisor or to cure any default in the Franchise agreement existing at the time of the proposed transfer.

(h) A provision that requires the Franchisee to resell to the franchisor items that are not uniquely identified with the franchisor. This subdivision does not prohibit a provision that grants to a franchisor a right of first refusal to purchase the assets of a Franchise on the same terms and conditions as a bona fide third party willing and able to purchase those assets, nor does this subdivision prohibit a provision that grants the franchisor the right to acquire the assets of a Franchise for the market or appraised value of such assets if the Franchisee has breached the lawful provisions of the Franchise agreement and has failed to cure the breach in the manner provided in subdivision (c).

(i) A provision which permits the franchisor to directly or indirectly convey, assign, or otherwise transfer its obligations to fulfill contractual obligations to the Franchisee unless provision has been made for providing the required contractual services.

(j) No statement, questionnaire, or acknowledgement signed or agreed to by a franchisee in connection with the commencement of the franchise relationship shall have the effect of (i) waiving any claims under any applicable state franchise law, including fraud in the inducement, or (ii) disclaiming reliance on any statement made by any franchisor, franchise seller, or other person acting on behalf of franchisor. This provision supersedes any other term of any document executed in connection with the franchise.

THE FACT THAT THERE IS A NOTICE OF THIS OFFERING ON FILE WITH THE ATTORNEY GENERAL DOES NOT CONSTITUTE APPROVAL RECOMMENDATION, OR ENDORSEMENT BY THE ATTORNEY GENERAL.

Any questions regarding this notice should be directed to:

State of Michigan / Department of Attorney General
Consumer Protection Agency
Attention: Franchise
670 Law Building
525 West Ottawa Street
Lansing, Michigan 48913
Telephone Number: (517) 335-7567

ADDENDUM TO THE ADVANCED FRESH CONCEPTS FRANCHISE CORP.
FRANCHISE DISCLOSURE DOCUMENT - REQUIRED BY THE STATE OF MINNESOTA

THESE FRANCHISES HAVE BEEN FILED UNDER THE MINNESOTA FRANCHISE ACT. REGISTRATION DOES NOT CONSTITUTE APPROVAL, RECOMMENDATION OR ENDORSEMENT BY THE COMMISSIONER OF COMMERCE OF MINNESOTA OR A FINDING BY THE COMMISSIONER THAT THE INFORMATION PROVIDED HEREIN IS TRUE, COMPLETE AND NOT MISLEADING.

THE MINNESOTA FRANCHISE ACT MAKES IT UNLAWFUL TO OFFER OR SELL ANY FRANCHISE IN THIS STATE WHICH IS SUBJECT TO REGISTRATION WITHOUT FIRST PROVIDING THE PROSPECTIVE FRANCHISEE, AT LEAST SEVEN DAYS PRIOR TO THE EXECUTION BY THE PROSPECTIVE FRANCHISEE OF ANY BINDING FRANCHISE OR OTHER AGREEMENT, OR AT LEAST SEVEN DAYS PRIOR TO THE PAYMENT OF ANY CONSIDERATION BY THE FRANCHISEE, WHICHEVER COMES FIRST, A COPY OF THIS PUBLIC OFFERING STATEMENT, TOGETHER WITH A COPY OF ALL PROPOSED AGREEMENTS RELATING TO THE FRANCHISE.

THIS PUBLIC OFFERING STATEMENT CONTAINS A SUMMARY ONLY OF CERTAIN MATERIAL PROVISIONS OF THE FRANCHISE AGREEMENT. THE CONTRACT OR AGREEMENT SHOULD BE REFERRED TO FOR AN UNDERSTANTING OF ALL RIGHTS AND OBLIGATIONS OF BOTH THE FRANCHISOR AND THE FRANCHISEE.

The following is added to the Cover Page and Item 17 of the Franchise Disclosure Document in Minnesota:

> Minn. Stat. §80C.21 and Minn. Rule 2860.4400J prohibits us from requiring litigation to be conducted outside Minnesota. In addition, nothing in the franchise disclosure document or agreement can abrogate or reduce any of your rights as provided for in Minnesota Statutes, Chapter 80C, or your rights to any procedure, forum, or remedies provided for by the laws of the jurisdiction.

The following is added to Item 13 the Franchise Disclosure Document in Minnesota:

> With respect to franchises governed by Minnesota law, we will comply with Minn. Stat. Sec. 80C.12, Subd. 1(g), which requires us to protect your rights to use the trademarks, service marks, tradenames, logotypes or other commercial symbols or indemnify you from any loss, costs or expenses arising out of any claim, suit or demand regarding the use of the name.

The following is added to Item 17 Franchise Disclosure Document in Minnesota:

> With respect to franchises governed by Minnesota law, we will comply with Minn. Stat. Sec. 80C.14, Subds. 3, 4, and 5 which require, except in certain specified cases, that you be given 90 days notice of termination (with 60 days to cure) and 180 days notice for non-renewal of the franchise agreement, and that our consent to the transfer of the franchise will not be unreasonably withheld.

The following is added to Item 17 of the Franchise Disclosure Document in Minnesota:

> With respect to franchises governed by Minnesota law, we will comply with Minn. Rule 2860.4400J, which prohibits us from requiring you to waive any rights, including consent to injunctive relief. However, we may still seek injunctive relief.

The following is added to Item 17 of the Franchise Disclosure Document in Minnesota:

> With respect to franchises governed by Minnesota law, we will comply with Minn. Rule 2860.4400D which prohibits us from requiring you to assent to a general release, except in connection with the voluntary settlement of disputes.

No statement, questionnaire, or acknowledgement signed or agreed to by a franchisee in connection with the commencement of the franchise relationship shall have the effect of (i) waiving any claims under any applicable state franchise law, including fraud in the inducement, or (ii) disclaiming reliance on any statement made by any franchisor, franchise seller, or other person acting on behalf of franchisor. This provision supersedes any other term of any document executed in connection with the franchise.

ADDENDUM TO THE ADVANCED FRESH CONCEPTS FRANCHISE CORP. FRANCHISE AGREEMENT - REQUIRED BY THE STATE OF MINNESOTA

The following is added to Section 4.3 of the Franchise Agreement in Minnesota:

> Franchisor will protect Franchisee's rights to use the licensed trademarks, or indemnify Franchisee from any loss, costs or expenses arising out of any claim, suit or demand regarding the use of the licensed trademarks.

The following is added to Section 14.2 of the Franchise Agreement in Minnesota:

> Consent to the transfer of the franchise will not be unreasonably withheld.

The following is added to Section 14.9 of the Franchise Agreement in Minnesota:

> Franchisor will not require Franchisee to assent to a general release exceeding the limits permitted by Minn. Rule 2860.400D.

The following is added to Section 15.2 of the Franchise Agreement in Minnesota:

> Except as and when otherwise permitted by law, Franchisee will be given 90 days notice of termination (with 60 days to cure) and except as and when otherwise permitted by law, 180 days notice for non-renewal of this agreement.

The following is added to Section 16.9 of the Franchise Agreement in Minnesota:

> Franchisor will not require Franchisee to waive any rights, including consent to injunctive relief, exceeding the limits permitted by Minn. Rule 2860.4400J. However, Franchisor may still seek such relief.

No statement, questionnaire, or acknowledgement signed or agreed to by a franchisee in connection with the commencement of the franchise relationship shall have the effect of (i) waiving any claims under any applicable state franchise law, including fraud in the inducement, or (ii) disclaiming reliance on any statement made by any franchisor, franchise seller, or other person acting on behalf of franchisor. This provision supersedes any other term of any document executed in connection with the franchise.

Dated this _____ day of _____ 20___.

FRANCHISEE	FRANCHISOR
_____	ADVANCED FRESH CONCEPTS FRANCHISE CORP.
Signature: _____	By: _____
Print Name: _____	Print Name: _____
Title: _____	Title: _____

ADDENDUM TO THE ADVANCED FRESH CONCEPTS FRANCHISE CORP. FRANCHISE DISCLOSURE DOCUMENT - REQUIRED BY AND FOR THE STATE OF NEW YORK

1. The following information is added to the cover page of the Franchise Disclosure Document in New York:

INFORMATION COMPARING FRANCHISORS IS AVAILABLE. CALL THE STATE ADMINISTRATORS LISTED IN EXHIBIT N OR YOUR PUBLIC LIBRARY FOR SOURCES OF INFORMATION. REGISTRATION OF THIS FRANCHISE BY NEW YORK STATE DOES NOT MEAN THAT NEW YORK STATE RECOMMENDS IT OR HAS VERIFIED THE INFORMATION IN THIS FRANCHISE DISCLOSURE DOCUMENT. IF YOU LEARN THAT ANYTHING IN THE FRANCHISE DISCLOSURE DOCUMENT IS UNTRUE, CONTACT THE FEDERAL TRADE COMMISSION AND THE NEW YORK STATE DEPARTMENT OF LAW, BUREAU OF INVESTOR PROTECTION AND SECURITIES, 28 LIBERTY STREET, 21ST FLOOR, NEW YORK, NEW YORK 10005. THE FRANCHISOR MAY, IF IT CHOOSES, NEGOTIATE WITH YOU ABOUT ITEMS COVERED IN THE FRANCHISE DISCLOSURE DOCUMENT. HOWEVER, THE FRANCHISOR CANNOT USE THE NEGOTIATING PROCESS TO PREVAIL UPON A PROSPECTIVE FRANCHISEE TO ACCEPT TERMS WHICH ARE LESS FAVORABLE THAN THOSE SET FORTH IN THIS FRANCHISE DISCLOSURE DOCUMENT.

2. The following is added at the end of Item 3 of the Franchise Disclosure Document in New York:

Except as provided above, with regard to AFC, its predecessor, a person identified in Item 2, or an affiliate offering franchises under AFC's principal trademark:

A. No such party has an administrative, criminal or civil action pending against that person alleging: a felony; a violation of a franchise, antitrust, or securities law, fraud, embezzlement, fraudulent conversion, misappropriation of property; unfair or deceptive practices or comparable civil or misdemeanor allegations.

B. No such party has pending actions, other than routine litigation incidental to the business, which are significant in the context of the number of franchisees and the size, nature or financial condition of the franchise system or its business operations.

C. No such party has been convicted of a felony or pleaded nolo contendere to a felony charge or, within the 10-year period immediately preceding the application for registration, has been convicted of or pleaded nolo contendere to a misdemeanor charge or has been the subject of a civil action alleging: violation of a franchise, antifraud or securities law, fraud, embezzlement, fraudulent conversion or misappropriation of property, or unfair or deceptive practices or comparable allegations.

D. No such party is subject to a currently effective injunctive or restrictive order or decree relating to the franchise, or under a Federal, State or Canadian franchise, securities, antitrust, trade regulation or trade practice law, resulting from a concluded or pending action or proceeding brought by a public agency; or is subject to any currently effective order of any national securities association or national securities exchange, as defined in the Securities and Exchange Act of 1934, suspending or expelling such person from membership in such association or exchange; or is subject to a currently effective injunctive or restrictive order relating to any other business activity as a result of an action brought by a public agency or department, including, without limitation, actions affecting a license of as a real estate broker or sales agent.

3. The following is added to the end of Item 4 of the Franchise Disclosure Document in New York:

   Neither AFC, its Affiliates, its Predecessors , officers, or general partner during the 10-year period immediately before the date of the disclosure document: (a) filed as debtor (or had filed against it) a petition to start an action under the U.S. Bankruptcy Code; (b) obtained a discharge of its debts under the bankruptcy code; or (c) was a principal officer of a company or a general partner in a partnership that either filed as a debtor (or had filed against it) a petition to start an action under the U.S. Bankruptcy Code or that obtained a discharge of its debts under the U.S. Bankruptcy Code during or within 1 year after the officer or general partner of the franchisor held this position in the company or partnership.

4. The following is added to the end of Item 5 of the Franchise Disclosure Document in New York:

   The initial franchise fee constitutes part of our general operating funds and will be used as such in our discretion.

5. The following is added to the end of the "Summary" section of Item 17(c) titled "**Requirements for franchisee to renew or extend**," and Item 17(m), entitled "**Conditions for AFC's approval of transfer**":

   However, to the extent required by applicable law, all rights you enjoy and any causes of action arising in your favor from the provisions of Article 33 of the General Business Law of the State of New York and the regulations issued thereunder shall remain in force; it being the intent of this provision that the non-waiver provisions of the General Business Law Sections 687.4 and 687.5 be satisfied.

6. The following language replaces the "Summary" section of Item 17(d), titled "**Termination by you**" in New York:

   You may terminate the agreement on any grounds available by law.

7. The following is added to the end of the "Summary" section of Item 17(j), titled "**Assignment of contract by AFC**" in New York:

   However, no assignment will be made except to an assignee who in the good faith and judgment of AFC, is willing and financially able to assume AFC's obligations under the Franchise Agreement.

8. The following is added to the end of the "Summary" sections of Item 17(v), titled "**Choice of forum**", and Item 17(w), titled "**Choice of law**":

   The foregoing choice of law should not be considered a waiver of any right conferred upon AFC or upon the franchisee by Article 33 of the General Business Law of the State of New York.

9. No statement, questionnaire, or acknowledgement signed or agreed to by a franchisee in connection with the commencement of the franchise relationship shall have the effect of (i) waiving any claims under any applicable state franchise law, including fraud in the inducement, or (ii) disclaiming reliance on any statement made by any franchisor, franchise seller, or other person acting on behalf of franchisor. This provision supersedes any other term of any document executed in connection with the franchise.

ADDENDUM TO THE ADVANCED FRESH CONCEPTS FRANCHISE CORP.
FRANCHISE DISCLOSURE DOCUMENT - REQUIRED BY THE STATE OF NORTH DAKOTA

Item 17(i) of the Franchise Disclosure Document is revised in North Dakota to delete the provision requiring you to pay our expenses in the event of your breach or default.

The following is added to Item 17(r) of the Franchise Disclosure Document in North Dakota:

> Covenants not to compete such as those mentioned above are generally considered unenforceable in the State of North Dakota.

Item 17(u) of the Franchise Disclosure Document is revised in North Dakota to allow the site of arbitration to be as agreeable to all parties.

The provisions contained in Item 17(v) of the Franchise Disclosure Document are deleted in North Dakota.

The provisions contained in Item 17(w) of the Franchise Disclosure Document are deleted in North Dakota.

No statement, questionnaire, or acknowledgement signed or agreed to by a franchisee in connection with the commencement of the franchise relationship shall have the effect of (i) waiving any claims under any applicable state franchise law, including fraud in the inducement, or (ii) disclaiming reliance on any statement made by any franchisor, franchise seller, or other person acting on behalf of franchisor. This provision supersedes any other term of any document executed in connection with the franchise.

The State of North Dakota has determined that parties agreeing to arbitration or mediation of disputes at a location that is remote from the site of the franchisee's business to be unfair, unjust, or inequitable within the intent of Section 51-19-09 of the North Dakota Franchise Investment Law. The site of arbitration or mediation will be agreeable to all parties and may not be remote from the franchisee's place of business.

ADDENDUM TO THE ADVANCED FRESH CONCEPTS FRANCHISE CORP. FRANCHISE AGREEMENT - REQUIRED BY THE STATE OF NORTH DAKOTA

If Franchisee's location is in North Dakota, then Section 15.6(E) of the Franchise Agreement is deleted.

If Franchisee's location is in North Dakota, then Section 6 of the Franchise Agreement will be interpreted in accordance with Section 9-08-06 of the North Dakota Century Code.

If Franchisee's location is in North Dakota then Sections 16.7 of the Franchise Agreement is deleted.

If Franchisee's location is in North Dakota then Section 16.8(D) of the Franchise Agreement is revised to provide that the site of arbitration shall be agreeable to all parties.

No statement, questionnaire, or acknowledgement signed or agreed to by a franchisee in connection with the commencement of the franchise relationship shall have the effect of (i) waiving any claims under any applicable state franchise law, including fraud in the inducement, or (ii) disclaiming reliance on any statement made by any franchisor, franchise seller, or other person acting on behalf of franchisor. This provision supersedes any other term of any document executed in connection with the franchise.

The State of North Dakota has determined that parties agreeing to arbitration or mediation of disputes at a location that is remote from the site of the franchisee's business to be unfair, unjust, or inequitable within the intent of Section 51-19-09 of the North Dakota Franchise Investment Law. The site of arbitration or mediation will be agreeable to all parties and may not be remote from the franchisee's place of business.

Dated this _____ day of _____ 20___.

FRANCHISEE	FRANCHISOR
_____	ADVANCED FRESH CONCEPTS FRANCHISE CORP.
Signature: _____	By: _____
Print Name: _____	Print Name: _____
Title: _____	Title: _____

DISCLOSURES REQUIRED BY RHODE ISLAND

Under Section 19-28.1-14 of the Rhode Island Franchise investment Act, a provision in a Franchise Agreement restricting jurisdiction or venue to a forum outside of Rhode Island or requiring the application of the laws of another state is void with respect to an otherwise enforceable claim that is not subject to binding arbitration.

No statement, questionnaire, or acknowledgement signed or agreed to by a franchisee in connection with the commencement of the franchise relationship shall have the effect of (i) waiving any claims under any applicable state franchise law, including fraud in the inducement, or (ii) disclaiming reliance on any statement made by any franchisor, franchise seller, or other person acting on behalf of franchisor. This provision supersedes any other term of any document executed in connection with the franchise.

ADDENDUM TO THE ADVANCED FRESH CONCEPTS FRANCHISE CORP. FRANCHISE AGREEMENT - REQUIRED BY THE STATE OF RHODE ISLAND

If Franchisee's location is in Rhode Island, then the parties agree that to the extent that any provision in any of the agreements entered into by the parties are inconsistent with the Rhode Island Franchise Investment Act, the provisions of the Act shall control. The parties furthermore expressly agree that Rhode Island law shall be applied to, and govern, any claim between the parties that alleges violation of the Act.

No statement, questionnaire, or acknowledgement signed or agreed to by a franchisee in connection with the commencement of the franchise relationship shall have the effect of (i) waiving any claims under any applicable state franchise law, including fraud in the inducement, or (ii) disclaiming reliance on any statement made by any franchisor, franchise seller, or other person acting on behalf of franchisor. This provision supersedes any other term of any document executed in connection with the franchise.

Dated this _____ day of _____ 20___.

FRANCHISEE	FRANCHISOR
_____	ADVANCED FRESH CONCEPTS FRANCHISE CORP.
Signature: _____	By:: _____
Print Name: _____	Print Name: _____
Title: _____	Title: _____

DISCLOSURES REQUIRED BY VIRGINIA

1. Item 17 is amended by the addition of the following:

   "According to Section 13.1-564 of the Virginia Retail Franchising Act, it is unlawful for a franchisor to cancel a franchise without reasonable cause. If any grounds for default or termination stated in the Franchise Agreement does not constitute "reasonable cause," as that term may be defined in the Virginia Retail Franchising Act or the laws of Virginia, that provision may not be enforceable."

2. No statement, questionnaire, or acknowledgement signed or agreed to by a franchisee in connection with the commencement of the franchise relationship shall have the effect of (i) waiving any claims under any applicable state franchise law, including fraud in the inducement, or (ii) disclaiming reliance on any statement made by any franchisor, franchise seller, or other person acting on behalf of franchisor. This provision supersedes any other term of any document executed in connection with the franchise.

3. Under subsection D of § 13.1-559 of the Virginia Retail Franchising Act, for all franchises located in Virginia, the franchise contract or agreement offered or entered into pursuant to terms of this chapter shall be governed by the laws of the Commonwealth of Virginia.

4. Under subdivision A 4 of § 13.1-563 of the Virginia Retail Franchising Act ("Act"), it is unlawful to offer or enter into a franchise agreement that restricts the right of a franchisee to engage in the business of offering, selling, or distributing goods or services at retail after termination or expiration of the franchise agreement. However, subsection B of § 13.1-563 of the Act provides that if a franchisee sells a franchise at a mutually agreed upon price to a third party or back to the franchisor, such sale may include a term restricting the right of such franchisee to engage in the business of offering, selling, or distributing goods or services at retail for a period of no more than two years after such sale.

WASHINGTON
ADDENDUM TO DISCLOSURE DOCUMENT, FRANCHISE AGREEMENT AND RELATED AGREEMENTS

The provisions of this Addendum form an integral part of, are incorporated into, and modify the Franchise Disclosure Document, the Franchise Agreement and all related agreements regardless of anything to the contrary contained therein. This Addendum applies if: (a) the offer to sell a franchise is accepted in Washington; (b) the purchaser of the franchise is a resident of Washington; and/or (c) the franchised business that is the subject of the sale is to be located or operated, wholly or partly, in Washington.

1. **Conflict of Laws.** In the event of a conflict of laws, the provisions of the Washington Franchise Investment Protection Act, Chapter 19.100 RCW (the "Act") will prevail.

2. **Franchisee Bill of Rights.** The State of Washington has a statute, the Act, which might supersede this Agreement in your relationship with us, including the areas of termination and renewal of your franchise. There might also be court decisions which supersede the Agreement in your relationship with us, including termination and renewal of your franchise. Franchise Agreement provisions, including those summarized in Item 17 of the Franchise Disclosure Document, are subject to state law.

3. **Site of Arbitration, Mediation, and/or Litigation.** In any arbitration or mediation involving a franchise purchased in Washington, the arbitration or mediation site will be either in the State of Washington, or in a place mutually agreed upon at the time of the arbitration or mediation, or as determined by the arbitrator or mediator at the time of arbitration or mediation. In addition, if litigation is not precluded by the Franchise Agreement, a Franchisee may bring an action or proceeding arising out of or in connection with the sale of franchises, or a violation of the Washington Franchise Investment Protection Act, in Washington.

4. **General Release.** A release or waiver of rights in the Franchise Agreement or related agreements purporting to bind you to waive compliance with any provisions under the Act or any rules or orders thereunder is void, except when executed pursuant to a negotiated settlement after the Agreement is in effect and where the parties are represented by independent counsel, in accordance with the Act. In addition, any such release or waiver executed in connection with a renewal or transfer of a franchise is likewise void, expect as provided for in the Act.

5. **Statute of Limitations and Waiver of Jury Trial.** Provisions contained in the Franchise Agreement or related agreements that unreasonably restrict or limit the statute of limitations period for claims under the Act, or rights or remedies under the Act, such as a right to a jury trial, might not be enforceable.

6. **Transfer Fees.** Transfer fees are collectable to the extent that they reflect our reasonable estimate or actual costs in effecting a transfer.

7. **Termination by Franchisee.** You may terminate the Franchise Agreement under any ground permitted under state law.

8. **Certain Buy-Back Provisions.** Provisions in Franchise Agreements or related agreements that permit the Franchisor to repurchase the Franchisee's business for any reason during the term of the Franchise Agreement without the Franchisee's consent are unlawful pursuant to RCW 19.100.180(2)(j), unless the franchise is terminated for good cause.

9. **Fair and Reasonable Pricing.** Any provision in the Franchise Agreements or related agreements that requires the Franchisee to purchase or rent any product or service for more than a fair and reasonable price is unlawful under RCW 19.100.180(2)(d).

10. **Waiver of Exemplary & Punitive Damages.** RCW 19.100.190 permits Franchisees to seek treble damages under certain circumstances. Accordingly, provisions contained in the Franchise Agreement or elsewhere requiring Franchisees to waive exemplary, punitive, or similar damages are void, except when executed pursuant to a negotiated settlement after the agreement is in effect and where the parties are represented by independent counsel, in accordance with RCW 19.100.220(2).

11. **Franchisor's Business Judgement.** Provisions in the Franchise Agreement or related agreements stating that the Franchisor may exercise its discretion on the basis of its reasonable business judgment may be limited or superseded by RCW 19.100.180(1), which requires the parties to deal with each other in good faith.

12. **Indemnification.** Any provision in the Franchise Agreement or related agreements requiring the Franchisee to indemnify, reimburse, defend, or hold harmless the Franchisor or other parties is hereby modified such that the Franchisee has no obligation to indemnify, reimburse, defend, or hold harmless the Franchisor or any other indemnified party for losses or liabilities to the extent that they are caused by the indemnified party's negligence, willful misconduct, strict liability, or fraud.

13. **Attorneys' Fees.** If the Franchise Agreement or related agreements require a Franchisee to reimburse the Franchisor for court costs or expenses, including attorneys' fees, such provision applies only if the Franchisor is the prevailing party in any judicial or arbitration proceeding.

14. **Noncompetition Covenants.** Pursuant to RCW 49.62.020, a noncompetition covenant is void and unenforceable against an employee, including an employee of a Franchisee, unless the employee's earnings from the party seeking enforcement, when annualized, exceed $100,000 per year (an amount that will be adjusted annually for inflation). In addition, a noncompetition covenant is void and unenforceable against an independent contractor of a Franchisee under RCW 49.62.030 unless the independent contractor's earnings from the party seeking enforcement, when annualized, exceed $250,000 per year (an amount that will be adjusted annually for inflation). As a result, any provisions contained in the Franchise Agreement or elsewhere that conflict with these limitations are void and unenforceable in Washington.

15. **Nonsolicitation Agreements.** RCW 49.62.060 prohibits a Franchisor from restricting, restraining, or prohibiting a franchisee from (i) soliciting or hiring any employee of a franchisee of the same Franchisor or (ii) soliciting or hiring any employee of the Franchisor. As a result, any such provisions contained in the Franchise Agreement or elsewhere are void and unenforceable in Washington.

16. **Questionnaires and Acknowledgments.** No statement, questionnaire, or acknowledgement signed or agreed to by a Franchisee in connection with the commencement of the franchise relationship shall have the effect of (i) waiving any claims under any applicable state franchise law, including fraud in the inducement, or (ii) disclaiming reliance on any statement made by any Franchisor, franchise seller, or other person acting on behalf of Franchisor. This provision supersedes any other term of any document executed in connection with the franchise.

17. **Prohibitions on Communicating with Regulators.** Any provision in the Franchise Agreement or related agreements that prohibits the Franchisee from communicating with or complaining to regulators is inconsistent with the express instructions in the Franchise Disclosure Document and is unlawful under RCW 19.100.180(2)(h).

18. **Advisory Regarding Franchise Brokers.** Under the Act, a "franchise broker" is defined as a person that engages in the business of the offer or sale of franchises. A franchise broker represents the Franchisor and is paid a fee for referring prospects to the Franchisor and/or selling the franchise. If a Franchisee is working with a franchise broker, Franchisees are advised to carefully evaluate any information provided by the franchise broker about a franchise.

19. The following sentence is added to Item 1 of the Franchise Disclosure Document:

For Washington residents and for locations in the state of Washington, following your request, we will allow you to view an unredacted version of the underlying agreement with the venue where your Food Service Counter will be located. Following your request, we will provide you with a copy of the underlying agreement with the venue where your Food Service Counter is or will be located, subject to redaction of confidential provisions negotiated with the venue. Provisions subject to redaction include the percentage of rent payable to other facilities covered by the agreement, payment methods, payment terms, term of the agreement, and Exhibit A, which lists locations covered by the agreement not relevant to your proposed operations.

20. The following sentence is added to Item 1 of the Franchise Disclosure Document:

For locations outside Washington, we offer franchisees the opportunity to operate Food Service Counters under the trademarks "Southern Tsunami" and "Hybrid Sushi". We do not offer this opportunity to Washington residents or for locations in the state of Washington. Accordingly, you will not be able to use these marks at your locations.

21. The following sentence is added to Item 6, Note 4 of the Franchise Disclosure Document and Section 9.3 of the Franchise Agreement:

"For Washington residents and for locations in the state of Washington, we will never retain more than 11% of the amounts collected on account of your operations (plus any amounts you owe us) and you will never receive less than 62% of the amounts collected from your operations (adjusted for any amounts you owe us)."

22. For Washington residents and for locations in the state of Washington, the following sentence is deleted in Section 3.2 of the Franchise Agreement:

"Franchisee releases Franchisor and its affiliates, and each of their respective officers, directors, agents and employees from any loss of right or consent to operate at the location, and further agrees not to hold Franchisor liable for any such event during the term of this Agreement or thereafter".

23. For Washington residents and for locations in the state of Washington, the following is added to Section 3.2 of the Franchise Agreement:

"If the facility at which Franchisee operates closes, objects to Franchisee's continued operation, or otherwise becomes unavailable through no fault of Franchisee, and Franchisor is unable to identify a replacement location within fifteen (15) miles of Franchisee's original location within ninety (90) days; (a) the Franchise Agreement may be terminated by Franchisor without cause; (b) the covenant not to compete set forth in Section 6.4 of the Franchise Agreement shall be void; and (c) the Franchisor shall comply with the requirements under RCW 19.100.180(2)(j) by purchasing at fair market value the equipment and inventory owned by Franchisee and used in operating the Food Service Counter with any outstanding amounts owed under Franchisor-provided financing offset against such compensation."

24. Section 16.13 of the Franchise Agreement is deleted in its entirety.

25. In Re Assurance of Discontinuance ("AOD"):

For many years AFC franchise agreements said a franchisee must not hire employees of AFC or of other AFC franchisees. Generally, this was Section 6.7 of the Franchise Agreement. Previously, this clause was never challenged.

The Attorney General of Washington State claimed our provision was a restraint of trade and demanded that AFC not enforce the provision. AFC denied the Attorney General's claim. Because we and our franchisees are all one brand, we believed our steps were lawful and pro-competitive.

In June 2019, before we were contacted by Washington State, AFC preemptively removed the no-poach provision from our standard Franchise Agreement, and decided we will not enforce and will not require franchisees to comply with it. On November 15, 2019, without admitting liability and solely to avoid protracted and expensive litigation with the Washington Attorney General (AG), AFC entered into an agreement with Washington State. Under the agreement, AFC agreed: (1) not to include no-poach provisions in future franchise agreements for locations in the United States; (2) not to enforce no-poach provisions in our existing U.S. franchise agreements and not seek to intervene in any action brought by the Washington AG to defend the legality of the no-poach provision; (3) to notify all U.S. franchisees of AFC's agreement with the Washington AG and to provide them a copy of the AOD on request; (4) to notify the Washington AG if we learn of any effort by a Washington franchisee to enforce an existing no-poach agreement; (5) within 90 days of the entry of the AOD to endeavor to amend all existing franchise agreements in Washington to remove the no-poach provision and to provide the Washington AG the name and address of franchisees who decline our offer to amend the franchise agreement; (6) as they come up for renewal or renegotiation, to amend existing U.S. franchise agreements to remove the no-poach provision; and (7) within 30 days of the conclusion of the above time periods to notify the AG's office of our compliance.

The AOD we entered into was a voluntary settlement and was not an admission of law, fact, liability, misconduct or wrongdoing on AFC's part.

The undersigned does hereby acknowledge receipt of this addendum.

Dated this _____ day of _____ 20____.

FRANCHISEE	FRANCHISOR
_____	ADVANCED FRESH CONCEPTS FRANCHISE CORP.
Signature: _____	By: _____
Print Name: _____	Print Name: _____
Title:_____	Title:_____

EXHIBIT P

CONFIDENTIALITY AGREEMENT

CONFIDENTIALITY AGREEMENT

This Confidentiality Agreement (this "Agreement") is made and entered into on _____, 20__ between Advanced Fresh Concepts Franchise Corp. a California corporation ("Franchisor") with an address of 19700 Mariner Avenue Torrance, California 90503, on the one hand, and _____, a _____ ("Candidate") with an address of_____, on the other hand, with reference to the following facts:

A. Franchisor has developed the "AFC System" for the establishment and operation of one or more Zenshi Counter(s), AFC Food Service Counter(s), and Wild Blue Counter(s) in grocery stores, retail stores and other locations ("Food Service Counters") that offer prepared sushi and other Asian style foods under the trade names and service marks "Zenshi," "Advanced Fresh," the oval AFC logo, "Wild Blue," "Hybrid Sushi," "Southern Tsunami," the Southern Tsunami logo and other related trademarks, service marks, logos and commercial symbols, and the trade dress used to identify the Food Service Counters (collectively, the "AFC Marks"). The "AFC System" means the unique system developed by Franchisor that includes operating methods and business practices related to Food Service Counters, the relationship between Franchisor and its franchisees, Food Service Counter design, other items of trade dress, specifications for equipment, fixtures and uniforms, defined product offerings, recipes and preparation methods, Franchisor specified pricing and promotions, restrictions on ownership, standard operating and administrative procedures, management and technical training programs, marketing and public relations programs, and Franchisor's website, all as Franchisor may modify from time to time.

B. Franchisor has the right to use, and to license others to use, the AFC Marks and the AFC System, and has, as a result of its expenditure of time, skill, effort, and money, developed a distinctive franchise model for qualified franchisees to obtain the right to operate a Food Service Counter using the AFC Marks and the AFC System.

C. Franchisor may provide Candidate with confidential, proprietary and/or trade secret information regarding the AFC System prior to granting or declining to grant Candidate a franchise or entering into a Franchise Agreement with Candidate. Franchisor desires that Candidate maintain the confidentiality of all such confidential, proprietary and/or trade secret information on the terms and conditions set forth in this Agreement.

NOW, THEREFORE, IT IS AGREED:

1. **INCORPORATION OF RECITALS**.

The recitals set forth in Paragraphs A through Paragraph C above are true and correct and are hereby incorporated by reference into the body of this Agreement.

2. **CONFIDENTIALITY**.

Candidate acknowledges and agrees that:

2.1. **Confidential Information**. Candidate's knowledge of the elements of the AFC System and any other proprietary data that may be disclosed to Candidate by Franchisor, or any affiliate of Franchisor, including, without limitation, any and all confidential and/or proprietary knowledge, data or information of Franchisor and any and all confidential and/or proprietary knowledge, data or information which Candidate has obtained or obtains from Franchisor which Franchisor treats as proprietary or designates (whether or not in writing or electronic form) as confidential shall constitute "Confidential Information". By way of illustration, but not limitation, "Confidential Information" includes tangible and intangible information (whether or not in electronic form) relating to Franchisor's business operations, styles, products and services, recipes, sources of materials and equipment, client management and other software, data, other content, formulations, patterns, compilations, programs, devices and processes, business relationships, contact information for industry professionals, developmental or experimental work and services, improvements, discoveries, plans for research, potential new or supplemental products and services,

websites, advertisements or ancillary products and services, marketing and selling methods and/or plans, business plans, budgets and unpublished financial statements, licenses, prices and costs, vendors, collaborators, current customer and prospective customer names and addresses, information on Franchisor, Franchisor's arrangements and contracts with the facility owners where the Food Service Counters are located, information regarding credit extensions to customers, customer service purchasing histories and prices charged to customers, customer lists and other customer data, information regarding the skills and compensation of employees and contractors of Franchisor, designs, drawings, specifications, source code, object code, documentation, diagrams, flowcharts, research, development, marketing techniques and materials, trademarks, trade secrets, sales/license techniques, inventions, copyrightable material, trademarkable material, databases, relationships between Franchisor and other companies, persons or entities, the AFC System, and any other information or material considered proprietary by Franchisor whether or not designated as confidential information by Franchisor, that is not generally known by the public, or which derives independent economic value (actual or potential) from not being generally known to the public or persons unaffiliated with Franchisor or its affiliates and which is the subject of efforts by Franchisor that are reasonable under the circumstances to maintain its secrecy, and any other information in oral, written, graphic or electronic form which, given the circumstances surrounding its disclosure, would be considered confidential. Confidential Information also includes the manner in which any of the above described items may be combined with any other information or products or synthesized or used by Candidate. Confidential Information does not include any information that was in the lawful and unrestricted possession of Candidate prior to its disclosure by Franchisor; is or becomes generally available to the public by acts other than those of Candidate after receiving it; has been received lawfully and in good faith by Candidate from a third party who did not derive it from Franchisor or Candidate; or is shown by acceptable evidence to have been independently developed by Candidate.

2.2. **Value**. The Confidential Information has been developed by Franchisor, and its parent company and affiliate by the investment of time, skill, effort and money and is widely recognized by the public and is of substantial value.

2.3. **Proprietary**. The Confidential Information is proprietary, confidential and constitutes a trade secret of Franchisor and its affiliates.

2.4. **Maintain Confidentiality**. Candidate will fully and strictly maintain the confidentiality of the Confidential Information, will exercise the highest degree of diligence in safeguarding the Confidential Information and will not disclose or reveal the Confidential Information to any person other than another person who is actively and directly participating in the acquisition of the franchise with Candidate, but only after first disclosing the identity of such person to Franchisor in writing and obtaining such person's signature on a Non-Disclosure Agreement similar to this Agreement, unless covered by attorney-client privilege.

2.5. **Reproduction and Use**. Candidate will not directly or indirectly reproduce or copy any Confidential Information or any part thereof and will make no use of any Confidential Information for any purpose whatsoever unless and until Candidate becomes a franchisee of Franchisor, and then only in accordance with the provisions of Candidate's Franchise Agreement.

2.6 **No Prior Experience**. Candidate specifically acknowledges and agrees that prior to the execution of this Agreement, Candidate had no experience, information or knowledge whatsoever about Food Service Counters or restaurants that serve or offer prepared sushi and other Asian style foods and that Candidate's knowledge of the Confidential Information was obtained solely from Franchisor pursuant to this Agreement. In addition, Candidate specifically acknowledges that, pursuant to this Agreement, Candidate will receive valuable Confidential Information regarding the operational, sales, promotional, and marketing methods and techniques of Franchisor and the AFC System, which are unique and proprietary to Franchisor, derive independent economic value from not being generally known to the public and are the subject of Franchisor's efforts and that are reasonable under the circumstances to maintain their secrecy.

3. **GENERAL**.

3.1. **Injunction**. Candidate recognizes the unique value and secondary meaning attached to the Confidential Information and the elements of the AFC System and agrees that any noncompliance with the terms of this Agreement or any unauthorized or improper use of the Confidential Information will cause irreparable damage to Franchisor and its franchisees. Candidate therefore agrees that if Candidate should engage in any such unauthorized or improper use of the Confidential Information, Franchisor shall be entitled to both permanent and temporary injunctive relief from any court of competent jurisdiction without notice or the posting of any bond, in addition to any other remedies prescribed by law.

3.2. **Heirs and Successors**. This Agreement shall be binding upon and inure to the benefit of the parties, their heirs, successors and assigns.

3.3. **Entire Agreement**. This Agreement represents the entire understanding between the parties regarding the subject matter of this Agreement and supersedes all other negotiations, agreements, representations and covenants, oral or written. This Agreement may not be modified except by a written instrument signed by Franchisor and Candidate that expressly modifies this Agreement. The parties intend this Agreement to be the entire integration of all of their agreements regarding the subject matter of this Agreement. No other agreements, representations, promises, commitments or the like, of any nature, exist between the parties.

3.4. **No Right to Use the AFC System or the AFC Marks**. This Agreement is not a Franchise Agreement or a license of any sort, and does not grant Candidate any right to use or to franchise or license the use of, the Confidential Information, which right is expressly reserved by Franchisor.

3.5. **Waiver**. Failure by Franchisor to enforce any rights under this Agreement shall not be construed as a waiver of such rights. Any waiver, including a waiver of default, in any one instance shall not constitute a continuing waiver or a waiver in any other instance.

3.6. **Validity**. Any invalidity of any portion of this Agreement shall not affect the validity of the remaining portions and unless substantial performance of this Agreement is frustrated by any such invalidity, this Agreement shall continue in full force and effect.

3.7. **Headings and Gender**. The headings herein are for purposes of convenience only and shall not be used in construing the provisions hereof. As used herein, the male gender shall include the female and neuter genders, the singular shall include the plural and the plural, the singular.

3.8. **Attorneys' Fees**. If Franchisor becomes a party to any legal proceedings concerning this Agreement by reason of any act or omission of Candidate or its authorized representatives, Candidate shall be liable to Franchisor for the reasonable attorneys' fees and court costs incurred by Franchisor in the legal proceedings. If either party commences a legal proceeding against the other party arising out of or in connection with this Agreement, the prevailing party shall be entitled to have and recover from the other party its reasonable attorneys' fees and costs of suit.

3.9. **Cumulative Remedies**. Any specific right or remedy set forth in this Agreement, legal, equitable, or otherwise, shall not be exclusive, but shall be cumulative with all other rights or remedies set forth herein or allowed or allowable by law.

3.10. **Notices**. Except as otherwise stated in this Agreement, all notices which are required by this Agreement shall be deemed to be delivered 3 days after being placed in the U.S. Mail, certified mail, return receipt requested or priority mail with delivery receipt confirmation, or one day after being sent by United Parcel Service or other receipted overnight courier service if addressed to a party at the address stated in the introductory paragraph of this Agreement, or other address of which a party has given notice to the other, or immediately by hand delivery to a party. Franchisee shall provide Franchisor Franchisee's physical address for notice purposes under this Section and shall keep Franchisor updated of any changes thereto.

3.11. **Governing Law**. This Agreement takes effect upon its acceptance and execution by Franchisor in California, and shall be interpreted and construed under the laws of California.

3.12. **Venue**. The parties agree that any action brought by either party against the other in any court, whether federal or state, shall be brought within the city and county in which Franchisor has its principal place of business at the time the action is initiated, and the parties hereby waive all questions of personal jurisdiction or venue for the purpose of carrying out this provision.

3.13. **Counterparts and Electronic Transmission; Electronic Signatures**. This Agreement may be executed in any number of counterparts, each of which shall be deemed to be an original and all of which together shall be deemed to be one and the same instrument. Copies of this Agreement with signatures that have been transmitted by email or by facsimile shall constitute and be deemed original copies of this Agreement for all purposes, provided that the copies are fully executed, dated and identical in form to the original hard copy version of this Agreement. In addition, this Agreement may be signed electronically by the Parties and electronic signatures appearing on this Agreement shall be deemed to be the same as handwritten signatures for the purposes of the validity, enforceability and admissibility of this Agreement.

IN WITNESS WHEREOF, the parties have executed this Agreement as of the Effective Date.

FRANCHISOR:	**CANDIDATE**:
ADVANCED FRESH CONCEPTS FRANCHISE CORP., A California corporation	
By: _____	By:_____
Name: _____	Name:_____
Title: _____	Title:_____

EXHIBIT Q

TABLET AND RICE SHEETER SPECIFICATIONS

Galaxy Tab A9+ 5G

BUY NOW

S

SAMSUNG Shop Mobile TV & AV Appliances Monitors Wearables Accessories

Galaxy Tab A9 | Tab A9+

Samsung and Cookies

This site uses cookies. By clicking ACCEPT or continuing to browse the site you are agreeing to our use of cookies. Find out more here

Accept

nage simulated. Color and availability may vary depending on country or carrier.

Galaxy Tab A9+ 5G

BUY NOW

Features Spec Review Support

Screen

Memory

5G

Classic and contemporary

Stylish with a touch of cool, the Galaxy Tab A9 and Tab A9+ features a sleek design and a smooth metal body. Enjoy Samsung's signature tablet design in Graphite, Silver and Navy with each hue highlighting effortless charm.

Samsung and Cookies

This site uses cookies. By clicking ACCEPT or continuing to browse the site you are agreeing to our use of cookies. Find out more here

Accept

Tab A9+ are available in Graphite, Silver and Navy. Color availability may vary by country or carrier.

Expansive, bright visuals with smooth motion

Experience the joy of entertainment on the large, bright display. Galaxy Tab A9+'s high screen refresh rate lets you immerse in the visuals with smooth and fluid motion. Even when you are out in the sun, step into the captivating world of your favorite content.

* Image simulated for illustrative purposes.
** Measured diagonally, Galaxy Tab A9's screen size is 8.7" in the full rectangle without accounting for the rounded corners. Galaxy Tab A9+'s screen size is 11.0" in the full rectangle without accounting for the rounded corners. Actual viewable area is less due to the rounded corners.
*** Galaxy Tab A9's screen refresh rate is up to 60Hz. Galaxy Tab A9+'s screen refresh rate is up to 90Hz.

Samsung and Cookies

This site uses cookies. By clicking ACCEPT or continuing to browse the site you are agreeing to our use of cookies. Find out more here

Accept

Galaxy Tab A9+ 5G

BUY NOW

Features Spec Review Support

Galaxy Tab A9 and Tab A9+ come with up to 8GB of RAM memory, ensuring less lag while you multi-task. Plus, the built-in 128GB storage saves all your hi-res videos, photos and files. You can expand the storage with a microSD card — up to 1TB. Store more of what you love and delete less.

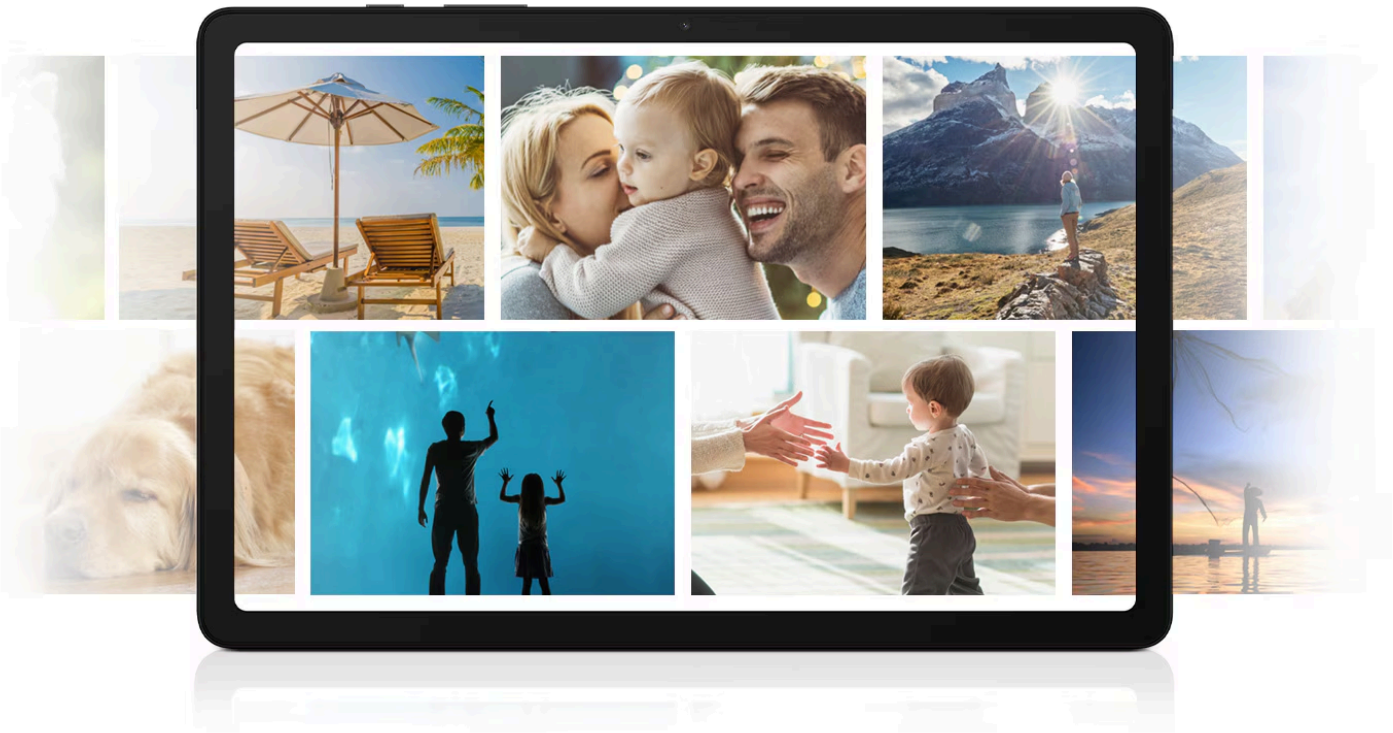

* Image simulated for illustrative purposes.
** Storage options and availability may vary by country or region.
*** Actual storage availability may vary depending on pre-installed software.
**** Two memory and storage options are available for Galaxy Tab A9 and Tab A9+: 4GB memory and 64GB storage, 8GB memory and 128GB storage.
***** MicroSD card sold separately. All models support microSD cards with up to 1TB storage. External memory can be used to store media (photos, video and music files), but not applications. Availability may vary by country and manufacturer.

Samsung and Cookies

This site uses cookies. By clicking ACCEPT or continuing to browse the site you are agreeing to our use of cookies. Find out more here

Accept

lay, browse faster with 5G

Galaxy Tab A9+ 5G

BUY NOW

Features Spec Review Support

* Image simulated for illustrative purposes.
** 5G connectivity supported on Galaxy Tab A9+ only.
*** Requires optimal 5G connection. 5G services are only supported in 5G network enabled locations. Actual speed may vary depending on country, carrier and user environment.

Samsung and Cookies

This site uses cookies. By clicking ACCEPT or continuing to browse the site you are agreeing to our use of cookies. Find out more here

Accept

into three. Multiply your productivity

Conquer multiple tasks at once. With Galaxy Tab A9+, you can sketch out architectural plans and choose captivating visuals and video chat — up to three apps all on one screen without ever closing a window.

* Up to two apps can be displayed simultaneously on Galaxy Tab A9. Up to three apps can be displayed simultaneously on Galaxy Tab A9+.
** Certain applications may not support multi-tasking.
*** Image simulated for illustrative purposes. Actual UI may be different.

Surround yourself with rich audio

Take a deep dive into a rich soundscape with speakers that provide an enveloping audio experience. Whether you're enjoying a movie or music, Galaxy Tab A9+ lets you fully engage in 3D sound with stunning clarity and depth.

Samsung and Cookies

This site uses cookies. By clicking ACCEPT or continuing to browse the site you are agreeing to our use of cookies. Find out more here

Accept

Galaxy Tab A9+ 5G

BUY NOW

Features Spec Review Support

* Image simulated for illustrative purposes.
** Galaxy Tab A9 includes Dual Speakers (1.0W). Galaxy Tab A9+ includes Quad Speakers (1.2W).
*** Both Galaxy Tab A9 and Galaxy Tab A9+ support Dolby Atmos.

Secure your peace of mind

Keep your information safe and sound. Store important data in the Secure Folder and monitor the overall security status of your device on the Privacy Dashboard. Make the most of your Samsung Galaxy experience, worry-free of security issues.

Samsung and Cookies

This site uses cookies. By clicking ACCEPT or continuing to browse the site you are agreeing to our use of cookies. Find out more here

Accept

Galaxy Tab A9+ 5G

BUY NOW

Features Spec Review Support

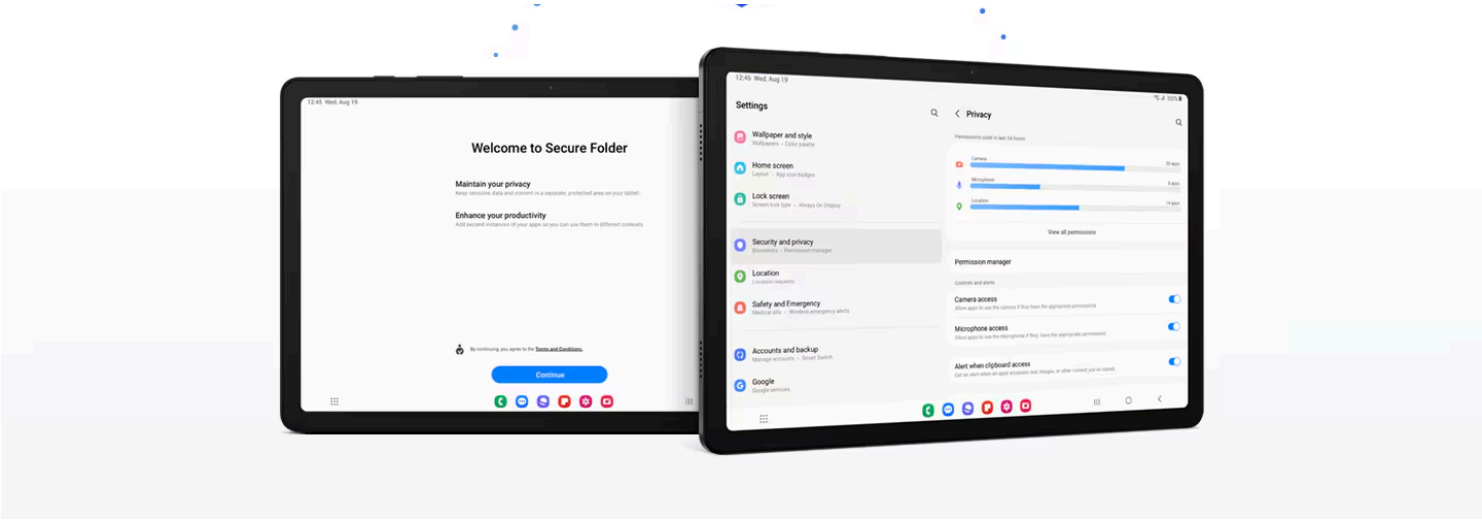

* Image simulated for illustrative purposes. Actual UI may be different.

Quick Share at hyperspeed

Quick Share

Sharing your photos, videos and documents is fast and easy with Quick Share. Just a few taps and you can instantly send file
Book to other nearby Galaxy devices — even to multiple devices. Want to send a file to a non-Galaxy device? It's as

Samsung and Cookies

This site uses cookies. By clicking ACCEPT or continuing to browse the site you are agreeing to our use of cookies. Find out more here

Accept

Galaxy Tab A9+ 5G

BUY NOW

Features Spec Review Support

* All functions are supported from One UI 5.1. Availability of One UI 5.1 may vary depending on device, country, region and carrier.
** Each device needs to have One UI 5.1, have Bluetooth turned on and be connected to the same Samsung account.
*** Continue app on other devices is only compatible with Samsung Internet and Samsung Notes. For this feature to work, the two devices you are going to use must be signed in to the same Samsung account and connected to the same Wi-Fi network, with Bluetooth and Continue on other devices feature enabled on both devices.
**** Image simulated for illustrative purposes. Actual UI may be different.

Specifications

Expand all

Overview

Size (Main Display)	Weight (g)	CPU Speed	CPU Type
11.0" (278.2mm)	491	2.2GHz, 1.8GHz	Octa-Core

Processor

Display

Camera

Storage/Memory

Samsung and Cookies

This site uses cookies. By clicking ACCEPT or continuing to browse the site you are agreeing to our use of cookies. Find out more here

Accept

Galaxy Tab A9+ 5G

BUY NOW

Features Spec Review Support

Sensors

Physical specification

Battery

Audio and Video

Services and Applications

Reviews Galaxy Tab A9+ 5G

4.8 (18 Reviews)

Recommended by **100**% of customers.

Write a review

5 stars	**83%** (15)
4 stars	**17%** (3)
3 stars	**0%** (0)
2 stars	**0%** (0)
1 stars	**0%** (0)

Reviews with images & videos

All Image Video

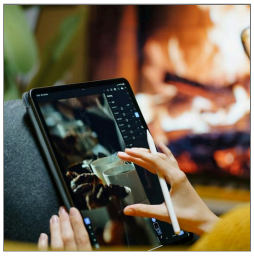

Samsung and Cookies

This site uses cookies. By clicking ACCEPT or continuing to browse the site you are agreeing to our use of cookies. Find out more here

Accept

Sort Most relevant

Galaxy Tab A9+ 5G

BUY NOW

Features Spec Review Support

2025-09-07
Uttar Pradesh, INDIA

Excellent feature 👍 😊 Battery performance good No laggggggg 😀

Helpful?

Originally posted on Galaxy Tab A9+ 5G(SM-X216BZAEMEA)

Features	Performance	Design	Value
5	4	4	4

5

Meekah

2024-09-13

Bought this on Amazon just yesterday and received it within just 4 hours of ordering it. I love Amazon prime.. The speakers on here are some of the most impressive I have ever heard on it any device including the fact that the speakers on this tablet destroy just about any laptop speakers I have ever heard .. even high-end gaming laptops wish they could sound this good. The specs are very great across the board for the price. The GPU could be a little better but no...

View more

I recommended this product.

Helpful? (7)

Originally posted on Galaxy Tab A9+ 5G(SM-X216BDBEMEA)

Features	Performance	Design	Value
4	4	5	5

4

Janii94

2024-06-27

Overall, its good! excellent finished design smooth functioning. Not support the E-Sim feature is this only issue I have faced.

Samsung and Cookies

This site uses cookies. By clicking ACCEPT or continuing to browse the site you are agreeing to our use of cookies. Find out more here

Accept

I recommended this product.

Helpful? (7)

Originally posted on Galaxy Tab A9+ 5G(SM-X216BZAEMEA)

Features	Performance	Design	Value

Galaxy Tab A9+ 5G

BUY NOW

Features Spec Review Support

Lookit

2024-05-19

5

Had for a month and it has been awesome. Plenty of speed, great video quality

I recommended this product.

Helpful? (8)

Originally posted on Galaxy Tab A9+ 5G(SM-X216BZAEMEA)

Features	Performance	Design	Value
5	5	5	5

Sivaprasad KG

2024-06-22

5

Really I am lucky to buy the new model of galaxy tab A9+5G silver... Its various advantages than the previous one really excited me... Its a perfect companion with my samsung galaxy phone also... Truly it is honoured by 5*...!!!

Helpful? (6)

Originally posted on Galaxy Tab A9+ 5G(SM-X216BZAEMEA)

Features	Performance	Design	Value
5	5	5	5

Vishnu

2024-05-05

5

Super powerful tablet computer and it was in buget also but flash light not given

Helpful? (11)

Originally posted on Galaxy Tab A9+ 5G(SM-X216BZAEMEA)

Features	Performance	Design	Value
4	5	3	4

Samsung and Cookies

This site uses cookies. By clicking ACCEPT or continuing to browse the site you are agreeing to our use of cookies. Find out more here

Accept

5

VERY GOOD DISPLAY AND SOUND. GOOD FOR WORK AND ENTERTAINMENT. I PURCHASED 3MONTHS AGO. I WANT A PEN TO WRITE NOTES.

Galaxy Tab A9+ 5G

BUY NOW

Features Spec Review Support

Navaros

2025-04-05
London ON

Features	Performance	Design	Value
5	5	5	4

4

Bought 6 months ago and very happy with my budget tablet. Needed same memory and some other semi-decent specs like a phone.. no way I could use anything less than 8gb RAM and 1080 display. Battery life is good if this isn't your main device. Would like android1ui update past 14-6.1. SIM slot works great, can leave my phone at home and tablet functions perfectly with phone app and speakerphone (or headset too I presume) and you can delete many pre-installed apps.

Helpful?

Originally posted on Galaxy Tab A9+ 5G(SM-X216BZAEMEA)

Features	Performance	Design	Value
3	4	3	5

View more

Authentic Reviews™ bazaarvoice

Solutions & Tips

What to do when your Samsung Galaxy device appears to be slow or unresponsive

Samsung and Cookies

This site uses cookies. By clicking ACCEPT or continuing to browse the site you are agreeing to our use of cookies. Find out more here

Accept

ice may appear to be charging slowly or not charging at all

or speaker is not working properly

What to do if your Samsung Galaxy Tab is not charging

Product support

Find answers the question you have about the product

Product support

Get the most from Samsung device and services.

Learn more

Live Chat

See how products work and get advice on which models fit your needs.

Learn more

* Key feature may different from Key Spec

* Images are for illustration purposes only and the accessories are sold separately.

* Features and Specifications are accurate as of commercial launch but may be subject to change without prior notification.

* Memory size : User memory is less than the total memory due to storage of the operating system and software used to operate the phones features. Actual user memory will vary depending on the mobile phone operator and may change after software upgrades are performed.

* Network Band: The bandwidths supported by the device may vary depending on the region or service provider.

* Network: 5G network availability may vary depending on the country, network provider and user environment.

* All specifications and descriptions provided herein may be different from the actual specifications and descriptions for the product. Samsung reserves the right to make changes to this web page and the product described herein, at anytime, without obligation on Samsung to provide notification of such change. All functionality, features, specifications, GUI and other product information provided in this web page including, but not limited to, the benefits, design, pricing, components, performance, availability, and capabilities of the product are subject to change without notice or obligation. The contents within the screen are simulated images and are for demonstration purposes only.

* User memory is less than the total memory due to storage of the operating system and software used to operate the device features. Actual user memory will vary depending on the operator and may change after software upgrades are performed

* Wi-Fi connection and speed may vary depending on the usage environment.

Samsung and Cookies

This site uses cookies. By clicking ACCEPT or continuing to browse the site you are agreeing to our use of cookies. Find out more here

Accept

of commercial launch but may be subject to change without prior notification.

atory condition. Typical value is the estimated average value considering the deviation in battery capacity among the dard. Rated (minimum) capacity is 7,040mAh.

s a full rectangle without accounting for the rounded corners.

n size is 8.7" in the full rectangle without accounting for the rounded corners. Galaxy Tab A9+'s screen size is 11.0" in the nded corners. Actual viewable area is less due to the rounded corners.

* CPU Speed - Based on maximum clock speed, the maximum clock speed of performance core and efficiency core respectively.

Galaxy Tab A9+ 5G

BUY NOW

Features **Spec** **Review** **Support**

factors.

* Size and weight may vary by the device's configuration and manufacturing process.

* Images are for illustration purposes only and the accessories are sold separately.

Copyright© 1995-2026 Samsung. All rights reserved.

Samsung and Cookies

This site uses cookies. By clicking ACCEPT or continuing to browse the site you are agreeing to our use of cookies. Find out more here

Accept

ZD410 Direct Thermal Printer

Ultra-compact and fast “fits anywhere” 2-inch printer

If you need fast, dependable printing in the most space constrained areas, you need the ZD410. This ultra-compact “fits anywhere” printer is designed for the smallest of work spaces. When it comes to flexibility, the ZD410 shines — this printer creates high-quality labels, receipts, tags and wristbands. This super-fast printer keeps your workers productive. Deployment is a breeze — the ZD410 is loaded with connectivity options. The ZD410 is easy to use, operate and troubleshoot, ensuring your printer is always up and running. And Zebra OneCare service maximizes the availability and productivity of your ZD410 printers with unmatched from-the-manufacturer support that covers everything — from worn out printheads to normal wear and tear. The ZD410 — the little printer designed with big business functionality.

Ultra Compact “Fits Anywhere” Printer
The ZD410 is the smallest printer in its class, fitting easily in the most space-constrained desktop or shelf.

Adaptable to Meet Your Current and Future Needs
The movable media sensor supports media with off-center black marks, die-cut notches or multiple labels across the width. Easily deploy in practically any technology environment with virtually every modern connectivity option, including USB, auto-sensing serial or 10/100 Ethernet and the latest wireless options — 802.11ac Wi-Fi and Bluetooth 4.1.

You can support Wi-Fi and Ethernet connectivity simultaneously. Add new communication or media handling options in the future, such as serial or Ethernet connectivity, and a peeler and a cutter, right on site. Backwards compatibility with existing applications, formats and printer languages allows you to easily upgrade from your aging Zebra LP 2824 Plus — just plug in the ZD410 and you’re back up and running. And with support for Zebra ZPL and EPL printer languages and many non-Zebra languages, it’s easy to upgrade from competitive printers.

Easy to Use and Troubleshoot
Five status icons — status, pause, data, supplies and network — provide the additional information you need to keep your Zebra printer up, running and available. Now, at glance, users can see if the media needs to be replenished, if the network connection is down and much more.

Easy to Clean and Sanitize Healthcare Model
Disinfectant-ready plastics and a sealed button interface make it easy to clean and disinfect the ZD410 healthcare model — crucial in hospitals and clinics. And with the 300 dpi printing option, even the small labels on specimen containers and prescriptions are highly legible.

The ZD410 — the little printer designed with big business functionality.
For more information, visit www.zebra.com/zd410

Link-OS for Unparalleled Ease of Management

Zebra's Link-OS unique printer software platform makes it easier than ever to integrate, manage and maintain one printer, a group of specific printers or all printers anywhere in the world via the cloud. And a quick tap of an NFC-enabled mobile device on the ZD410 provides access to Zebra's extensive knowledge base of how-to videos and more for fast issue resolution.[1]

Optional Battery for Cordless Operation

With the removable desktop battery power option, you can easily transport the ZD410 printer on a cart to enable on-the-spot printing to reduce steps, increase productivity and improve task accuracy. The battery housing mounts securely to the printer base and connecting the battery is as simple as snapping the battery into the housing. And the high-capacity battery can power it all for a full shift — the printer at maximum print speed, along with a peeler, cutter and keyboard.

Backed by Zebra's Worldwide Service and Support

Access repair support services, live-agent technical support and software support quickly anywhere around the globe through Zebra and its trusted network of more than 10,000 partners. Zebra OneCare™ provides enhanced coverage that exceeds standard warranty for normal wear and tear, priority repair turnaround times at the depot and more — all for a tiny fraction of the cost of a single repair.

Specifications

Standard Features

- Direct Thermal print method
- ZPL and EPL programming languages
- 5 status icon, 3 button user interface
- USB 2.0, USB Host
- OpenACCESS™ for easy media loading
- Dual-wall frame construction
- ENERGY STAR qualified
- ZebraDesigner Essentials – easy label design tool free at www.zebra.com/zebradesigner
- Two-year standard warranty

Physical Characteristics

Dimensions	8.6 in. L x 4.5 in. W x 6.0 in. H 220 mm L x 115 mm W x 151 mm H
Weight	2.2 lbs./1.0 kg

Printer Specifications

Resolution	203 dpi/8 dots per mm Optional 300 dpi/12 dots per mm
Memory	512 MB Flash; 256 MB SDRAM
Maximum Print Width	2.2 in./56 mm for 203 dpi and 300 dpi
Maximum Print Speed	6 in./152 mm per second (203 dpi) 4 in./102 mm per second (300 dpi)
Media Sensors	Full width, moveable reflective/black mark sensor; multi-position transmissive/ gap sensor
Firmware	ZPL II; EPL 2; EPL Line Mode; XML; ZBI

Media Characteristics

Maximum Label Length	39.0 in./991 mm
Maximum Label and Media Width	2.36 in./60 mm
Media Roll Size	5.00 in./127 mm outer diameter Core inner diameter: 0.5 in. (12.7mm) and 1.0 in. (25.4mm) standard, 1.5 in. (38.1mm), 2.0 in., (50.8mm) and 3.0 in. (76.2mm) using optional adapters
Thickness	0.003 in. (0.08 mm) min. - 0.0075 (.1905 mm)
Media Types	Roll-fed or fan-fold, die cut or continuous direct thermal labels with or without black mark, tag stock, continuous receipt paper, and wristbands

Operating Characteristics

Operating Temperature	40° to 105° F/4.4° to 41° C
Storage Temperature	-40° to 140° F/-40° to 60° C
Operating Humidity	10% to 90% non-condensing
Storage Humidity	5% to 95% non-condensing

Options and Accessories

Media Handling	Field installable dispenser — label peel and present with label present sensor; field installable cutter
Communications	Field installable RS-232 auto-sensing Serial, DB-9; Factory installed or field installable Ethernet — 10/100 internal; factory installed wireless dual radio: 802.11ac Wi-Fi and Bluetooth 4.1; Bluetooth Low Energy included as standard on network connected models
Battery	Provides power to the printer to support a full shift of printing at maximum print speed; supports all media handling options
Healthcare Model	Healthcare model with IEC 60601-1 compliant power supply and healthcare wipeable plastics
Real Time Clock	Real time clock included as standard on network connected models
Keyboard Display Unit	ZKDU keyboard display units for stand-alone printing solutions
Mounting Plate	Optional accessory to secure ZD Series printers to countertops or shelves

Fonts/Graphics/Symbologies

Barcode Ratios	2:1 and 3:1
1D Barcodes	Code 11, Code 39, Code 93, Code 128, ISBT-128, UPC-A, UPC-E, EAN-8, EAN-13, UPC and EAN 2-or 5-digit extensions, Plessey, Postnet, Standard 2-of-5, Industrial 2-of-5, Interleaved 2-of-5, Logmars, MSI, Codabar and Planet Code
2D Barcodes	Codablock, PDF417, Code 49, DataMatrix, MaxiCode, QR Code, MicroPDF, Aztec
Fonts and Graphics	16 resident expandable ZPL II bitmap fonts, two resident scalable ZPL fonts, five resident expandable EPL2 fonts, native open-type font support, Unicode compliant. China units include SimSun simplified Chinese font 64 MB user available non-volatile memory, 8 MB user available SDRAM

Regulatory

IEC 60950-1, EN55022 Class B, EN55024, EN61000-3-2, EN61000-3-3, FCC Class B, ICES-003, FCC 15.209; 15.247(d), IC RSS 247, EN 300 328, EN 301 893, EN 62311, cTUVus CE Marking, VCCI, C-Tick, S-Mark, CCC, CU, BSMI, KCC, SABS, IN-Metro, BIS, NOM

Environmental Compliance

Environment• RoHS Directive 2011/65/EU; Amendment 2015/863
• REACH SVHC 1907/2006
A complete list of product and materials compliance, please visit: www.zebra.com/environment

Print DNA

This printer is supported by our powerful Print DNA suite of applications, utilities and developer tools that give our printers better performance, simplified remote manageability, and easier integration. Print DNA features may vary by model and may require a Support Contract. For more information, please visit www.zebra.com/printdna

Markets and Application

Retail

- Return tags
- Shelf labeling
- Price markdowns
- Prescription labeling
- Coupon printing

Healthcare

- Prescription labels
- Patient record labels
- Lab and specimen labeling
- Patient ID wristbands

Transportation and Logistics

- Routing labels
- Asset tracking tags

Manufacturing (light industrial)

- Work-in-process labeling
- Product labeling

Security

- Visitor ID
- Evidence tracking

Travel and Hospitality

- Ticketing
- Luggage/bag tags

Operating Characteristics

Electrical	Auto-detectable (PFC Compliant) 100-240VAC, 50-60Hz; ENERGY STAR qualified; optional 2750 mAh battery

Printer Supplies

Keep your Zebra printer up and running with genuine Zebra printer supplies, available directly from Zebra.

Recommended Services

Zebra OneCare SV

Footnotes

1. NFC Print Touch not available on all models.

Product Warranty

ZD410 printers are warranted against defects in workmanship and materials for a period of 2 (two) years from the date of shipment. For the complete warranty statement, please visit: www.zebra.com/warranty.

The Zebra wordmark and logo are trademarks of Zebra Technologies Corp., registered in many jurisdictions worldwide. All other trademarks are the property of their respective owners. ©2026 Zebra Technologies Corp. and/or its affiliates. 09/18/2020

Samsung
Mobile Press

Tablet & PC

Galaxy Tab A7 Lite

Images | Videos | Tech Specs | Related Articles

Samsung Galaxy Tab A7 Lite

Display	8.7-inch* 1340x800 (WXGA+) TFT * *Measured diagonally as a full rectangle without accounting for the rounded corners.* *Actual viewable area is less due to the rounded corners.*
OS	Android 11
Dimension	212.5 x 124.7 x 8.0mm

Samsung
Mobile Press

Weight	Wi-Fi: 366g LTE: 371g
Camera	[Rear] 8MP AF [Front] 2MP
Memory*	3GB RAM with 32GB internal storage/ 4GB RAM with 64GB internal storage microSD** up to 1TB * *Storage availability may differ by country, model, color, or carrier. Actual storage space availability may vary depending on pre-installed software and by country, model, file size and format.* ** *MicroSD card sold separately.*
Processor	Octa-core 4x2.3GHz + 4x1.8GHz
Battery*	5,100mAh (15W Adaptive Fast Charging supported**) * *Typical value tested under third-party laboratory condition. Typical value is the estimated average value considering the deviation in battery capacity among the battery samples tested under IEC 61960 standard.* ** *A charger for 15W is sold separately.*
Connectivity	LTE* Wi-Fi 5 (802.11 a/b/g/n/ac), Wi-Fi Direct, Bluetooth® v5.0 * *Availability of LTE model varies by country and carrier.*

Samsung
Mobile Press

Color*	Gray, Silver * *Product color availability may vary depending on country, region, and carrier.*
Connectors	Type C USB 2.0, 3.5mm Ear jack
Sensors	Accelerometer, Compass, Light sensor
GPS	GPS+GLONASS, Beidou, Galileo
Audio	Dual Stereo Speakers sound by AKG, Dolby Atmos®
Video	Recording: FHD (1920x1080) @ 30fps Playback: FHD (1920x1080) @ 30fps
Accessories*	Book Cover, Clear Cover * *Accessories are available to purchase separately.*

*All functionality, features, specifications and other product information provided in this document including, but not limited to, the benefits, design, pricing, components, performance, availability, and capabilities of the product are subject to change without notice.

Samsung
Mobile Press

Related Channels

ZD411 Printer Specifications

Specifications are provided for reference and are based on printer tests using Zebra brand supplies. Results may vary in actual application settings or when using other than recommended Zebra supplies. Zebra recommends always qualifying any application with thorough testing.

Standard Features

- 6 ips maximum print speed
- ZPL II® and EPL2™ programming languages
- Connectivity: USB 2.0, USB Host
- Printer setup mobile app for Android™ and iOS via Bluetooth® Low Energy (BLE) connection
  - BLE is best used for printer setup and light data transfer events. For best performance when printing, use a printer with Bluetooth Classic.
  - For additional information see the application notes
- OpenACCESS™ design for easy media loading
- Real Time Clock (RTC)
- 203 dpi print resolution (8 dots/mm)
- 2.2 in./56 mm max print width (203 dpi)
- Direct thermal and thermal transfer printing of barcodes, text and graphics
- 512 MB of Flash memory
- 256 MB DDR3 SDRAM
- Head-up sensor
- Multi-position transmissive and full-width reflective sensor
- 5 in./127 mm max outside diameter media capability
- Fan-fold media feed slot
- Link-OS® printer operating system
- Print Touch enabled via NFC
- Unicode compliant for multi-language printing
- 16 resident expandable ZPL II bitmap fonts
- Two resident scalable ZPL fonts
- Multiple DOS and Windows® codepage support

- Windows drivers
- Printer utilities
- Linear and 2-D barcode symbologies
- PDF Direct
- ENERGY STAR® certified, meets Energy Efficiency Level VI
- Two-year standard warranty

Healthcare Models—Standard Features

- Healthcare-preferred white color scheme
- Healthcare-compliant power supply, IEC 60601-1 certified
- Disinfectant-ready, easy-to-clean plastics with sealed button interface
- UV-resistant housing supports UV cleaning protocols

Optional Features

- Healthcare model–direct thermal only
- 300 dpi print resolution (12 dots per mm)
- Field-installable cutter
  - Continuous paper, linered label and tag stock (Note: Cutting through labels and liner is not supported)
  - Maximum thickness 0.0075 in./0.1905 mm
- Field-installable peeler (dispenser)–label peel and present with label taken sensor with cutter, direct thermal model only

Connectivity Options

- Factory installed: dual radio Wi-Fi™ 6 (802.11ax) and Bluetooth 5.3 (MIMO)
- Field installable: dual radio Wi-Fi 6 (802.11ax) and Bluetooth 5.3 (SISO)
- Factory installed or field installable: dual radio Wi-Fi 5 (802.11ac) and Bluetooth 4.2
- Field installable: 10/100 Ethernet
- Field installable: Serial RS-232 auto-sensing

Accessories

- ZKDU–Zebra keyboard display unit for standalone printing solution
- ZD-Series Battery (2750 mAh) for cordless operation
- Mounting adapter bracket–enables printer to be mounted in same location as LP/TLP2824 Plus printer
- Media core adapters to accommodate 1.5 in., ID core sizes

ZBI 2.0

- Field installed via activation key

Software

- Zebra DNA™ software–includes a full suite of applications, utilities and developer tools. For more information, visit www.zebra.com/zebradna

Programming Languages

- Set-Get-Do commands to set and get printer configuration details
- ZPL II–Universal language for Zebra printers. Simplifies label formatting and enables format compatibility with existing systems that run Zebra printers
- EPL2–Eltron Programming Language simplifies label formatting and enables format compatibility with legacy applications
- EPL1–Line Mode available on direct thermal, 203 dpi model only
- Web View–Connect and control Zebra barcode printers via the printer's web interface using a common Web browser (ZPL mode)
- XML-Enabled Printing–allows XML communications for barcode label printing, eliminating license fees and printer service hardware while lowering customization and programming costs

Printer Specifications

Parameter	203 dpi resolution (8 dots/mm)	300 dpi resolution (12 dots/mm)
Speed in./Sec–ips (mm/sec)	Programmable 2, 3, 4, 5 or 6 max. (51, 76, 102, 127 with max. 152)	Programmable 2, 3 or 4 max. (51, 76, with max. 102)
Dot Pitch	0.0049 in./0.125 mm	0.0033 in./0.0847 mm
Min. Print Length	One Dot	One Dot
Max. Print Length	39.0 in./991 mm	39.0 in./991 mm
Min. Print Width	One Dot	One Dot
Max. Print Width	2.2 in./56 mm	2.13 in./54 mm

ZPL Programming Language (ZPL/ZPL II)

- Communicates in printable ASCII characters
- Compatible with mainframe, mini and PC hosts
- Downloadable objects include graphics and bitmap fonts, label templates and formats
- Automatic memory allocation for format while printing
- Automatic serialization of fields
- Format inversion (white on black)
- Mirror-image printing
- Four position field rotation (0°, 90°, 180°, 270°)
- Slew command
- Programmable label quantities with print, pause
- Status messages to host upon request

Ribbon Specifications

	ZD411 thermal transfer only
Ribbon Outside Diameter	1.34 in./34 mm
Ribbon Standard Length	243 ft./74 m
Ribbon Ratio	1:1 media to ribbon
Ribbon Width	1.3-2.24 in./33-58 mm
Ribbon Core I.D.	0.5 in./12.7 mm

Media Specifications

- Media Width: 0.585–2.36 in./6.4–60mm
  - Label Length:
    - Minimum 0.25 in./6.4 mm (tear)
    - Minimum 0.5 in./12.7 mm (with cutter)
    - Minimum 0.5 in./12.7 mm (with peeler)
    - Maximum 39 in./991 mm

    Core inner diameter:
    - Standard–0.5 in./12.7 mm, 1.0 in./25.4 mm
    - With optional adaptor kit–1.5 in./38.1 mm, 2.0 in./50.8 mm, 3.0 in./76.2 mm
- Max Roll Outer Diameter: 5.00 in./127 mm
- Media Thickness: 0.0024 in./0.06 mm min, 0.0075 in./0.1905 mm max (tear off mode only)
- Media Sensing: black line, gap, notch
- Media Type:
  - Roll-fed or fan-fold
  - Label stock (die cut or continuous, direct thermal or thermal transfer)
  - Tag stock (die cut or continuous, direct thermal or thermal transfer)
  - Receipt paper (continuous, direct thermal)
  - Wristband stock (direct thermal or thermal transfer)

Font Specifications: 203 DPI (8 Dots/mm)

Font	Matrix (in dots) (H × W)	Type†	Minimum Character Size (H x W) in in.	Max CPI
A	9 × 5	U-L-D	.044 x .030	33.3
B	11 × 7	U	.054 × .044	22.7
C, D	18 × 10	U-L-D	.088 × .059	16.9
E	28 × 15	OCR-B	.138 × .098	10.2
F	26 × 13	U-L-D	.128 × .079	12.7
G	60 × 40	U-L-D	.295 × .236	4.2
H	21 × 13	OCR-A	.103 × .093	10.8
GS	24 × 24	SYMBOL	.118 × .118	8.5
P-V	20 × 18	U-L-D	Backward compatible with S-300 Scalable (Smooth) Font	
Ø	15 × 12	U-L-D		

†U—Uppercase L—Lowercase D—Descenders

Font Specifications: 300 DPI (12 Dots/mm)

Font	Matrix (in dots) (H × W)	Type†	Minimum Character Size (H x W) in in.	Max CPI
A	9 × 5	U-L-D	.030 x .020	50.8
B	11 × 7	U	.037 × .030	33.8
C, D	18 × 10	U-L-D	.060 × .040	25.4
E	41 × 20	OCR-B	.138 × .085	11.5
F	26 × 13	U-L-D	.085 × .053	19.06
G	60 × 40	U-L-D	.200 × .160	6.36
H	30 × 19	OCR-A	.100 × .098	10.02
GS	24 × 24	SYMBOL	.80 × .80	12.7
P-V	20 × 18	U-L-D	Scalable (Smooth) Font	
Ø	15 × 12	U-L-D		

†U—Uppercase L—Lowercase D—Descenders

Font Specifications

- Character Fonts: Standard bitmapped Zebra fonts: A, B, C, D, E (OCR-B), F, G, H, (OCR-A), GS, P, Q, R, S, T, U, V and Ø Smooth font (CG Triumvirate™ Bold Condensed*)
- Supports user-defined fonts and graphics, including custom logos
- Bitmap fonts are expandable up to 10 times, height and width independent. Fonts E and H (OCR-B and OCR-A), however, are not considered in spec when expanded
- Smooth scalable font Ø (CG Triumvirate Bold Condensed*) is expandable dot-by-dot, height and width independent, while maintaining edges to a max. 1500 × 1500 dots
- Printers sold in China include the Simplified Chinese SimSun font pre-installed
- 64 MB user available non-volatile memory storage for downloadable objects
- 8 MB user available SDRAM

* Contains UFST® from Agfa Monotype Corporation

ZPL Barcode Symbologies

- Barcode ratios: 2:1 (non-rotated) and 3:1
- Linear barcodes: Code 11, Code 39, Code 93, Code 128, UPC-A, UPC-E, EAN-8, EAN-13, EAN-14, UPC-A and UPC-E with EAN 2 or 5 digit extensions, Plessey, POSTNET, Standard 2 of 5, Industrial 2 of 5, Interleaved 2 of 5, LOGMARS, MSI, Codabar, and GS1 DataBar (formerly RSS)
- 2-dimensional barcodes: PDF417, MicroPDF-417, Code 49, Maxicode, Codablock, Data Matrix, QR code, and Aztec

EPL Programming Language (EPL2)

- ASCII EPL2 programming language (Page Mode)
- Field rotations
- Variable field support (up to 100)
- Counter support (up to 10)
- Variable field addition and subtraction
- Status reporting
- Form, fonts and graphics storage
- Simple set of formatting commands
- Support of selected barcode

EPL Barcode Symbologies

- Linear barcodes: Code 39, Code 128A, B and C (User selectable/Auto), UCC/EAN-128, Code 93, Codabar, Interleaved 2 of 5, UPC-A, UPC-E, UPC-A with 2 and 5 add on, UPC-E with 2 and 5 add on, EAN 13, EAN 8, EAN 13 with 2 and 5 add on, EAN 8 with 2 and 5 add on, Postnet (5, 9, 11, and 13 digit) Japanese Postnet, Plessey (MSI-1), MSI-3, German Post Code, RSS-14 (limited, truncated, stacked)
- 2-dimensional barcodes: Maxicode (modes 2,3,4,6), PDF417 (MicroPDF417 and MacroPDF417), Data Matrix

Code Pages Supported

- DOS: 437, 850, 851, 852, 855, 857, 860, 861, 862, 863, 865, 866, 869, 737, Big 5, GB2312, GB18030
- Windows: 1250, 1251, 1252, 1253, 1254, 1255, 1256, 1257

Electrical Specifications

- Auto-ranging external power supply with C13 type connector
- Output Voltage/Current: 24V, 2.08A
- Input: 100-240 VAC, 50-60 Hz
- ENERGY STAR certified; Energy Efficiency Level VI certified
- Healthcare models include IEC 60601-1 certified power supply

Font Specifications

Type	Width	Height	SP	CPI	Chars
Font1	8	12	2	20.3	160
Font2	10	16	2	16.9	160
Font3	12	20	2	4.5	160
Font4	14	24	2	12.7	160
Font5	32	48	4	5.6	80

Interface/Connectivity Types

- Auto-sensing Serial–RS232 field-installable option:
  - Software selectable
    - Baud rate (default 9600)
    - Parity (default none)
    - Data length (default 8)
    - Stop bit (default 1)
  - Flow control–hardware and software
  - Connector: DB-9 Type: 9 pin D Sub connector female (standard)
  - Includes +5 VDC- 160 mA power output capability
- Wireless–factory or field-installable option
  - Dual radio Wi-Fi 6 (802.11ax) and Bluetooth 5.3
  - Dual radio Wi-Fi 5 (802.11ac) and Bluetooth 4.2
- USB:
  - Version 2.0 full speed, bi-directional
  - Connector–Type B Female
- Internal 10/100 Ethernet-field installable option

Agency approvals

- IEC 60950-1, EN55022 Class B, EN55024, EN61000-3-2, EN61000-3-3, FCC Class B, ICES-003, FCC 15.209; 15.247(d), IC RSS 247, EN 300 328, EN 301 893, EN 62311, cTUVus
- CE Marking, VCCI, C-Tick, S-Mark, CCC, CU, BSMI, KCC, SABS, IN-Metro, BIS, NOM

Physical Specifications

ZD411	
Dimensions	**ZD411 thermal transfer model** • 9.56 in. L x 5.46 in. W x 6.66 in. H • 242.9 mm L x 138.7 mm W x 169.2 mm H **ZD411 direct thermal model** • 8.6 in. L x 4.5 in. W x 6.0 in. H • 220 mm L x 115 mm W x 151 mm H
Weight	**ZD411 thermal transfer model** • 3.59 lbs./1.629 kg **ZD411 direct thermal model** • 2.2 lbs./1.0 kg

Operating Environment

ZD411	
Operational Temperature	40° to 105°F (4.4° to 41°C)
Non-Operational Temperature	-40° to 140°F (-40° to 60°C)
Operational Humidity	10 to 90% non-condensing
Non-Operational Humidity	5 to 95% non-condensing

Preventative Maintenance

Zebra recommends cleaning the printer on a regular basis using standard Zebra cleaning supplies. Refer to the User's Guide for more details.

Cleaning

The exterior is cleaned with a lint-free cloth, and if necessary, a mild detergent solution or desktop cleaner can be used. Interior components (printhead, platen, media path and dispenser bar) are cleaned with alcohol or blown air.

For cleaning healthcare models refer to: zebra.com/DeviceDisinfection

Media Registration

Media registration and minimum label length are affected by media type, width and print speed. Performance improves as these factors are optimized. Zebra recommends always qualifying any application with prior testing.

For more information, visit www.zebra.com/zd411

ZEBRA

NA and Corporate Headquarters
+1 800 423 0442
inquiry4@zebra.com

Asia-Pacific Headquarters
+65 6858 0722
contact.apac@zebra.com

EMEA Headquarters
zebra.com/locations
contact.emea@zebra.com

Latin America Headquarters
zebra.com/locations
la.contactme@zebra.com

ZEBRA and the stylized Zebra head are trademarks of Zebra Technologies Corp., registered in many jurisdictions worldwide. The Bluetooth® word mark and logos are registered trademarks owned by Bluetooth SIG, Inc. and any use of such marks by Zebra is under license. All other trademarks are the property of their respective owners. ©2025 Zebra Technologies Corp. and/or its affiliates. 03/20/2025

Product Specifications

Product Name	Rice Mat Maker for Commercial Use
Machine Name	ＭＡＫＩ MAKER
Model Name	ＡＳＭ８６５Ａ
Power Source	ＡＣ１２０Ｖ，６０Ｈｚ
Power Consumption	１１５Ｗ，１Ａ
External Dimensions	W 13.7in. x D 16.9 in. (max 23.0 in.) x H 23.2 in. (W 348 mm × D 430 mm（max585mm） × H 590 mm) ＊Excluding the Power Cord and salient of the Screws.
Weight	７０．５lｂｓ.(32 kg.)
Rice Mat Forming Size	
Rice Mat Width	7.4 in.(185mm) (vertical roll forming unit)/8.2 in.(205mm) (horizontal roll forming unit)
Rice Mat Length	1.2 in. ～ 8.6 in. (30 mm to 215 mm)
Rice Mat Thickness	0.2 in. ～ 0.6 in. (５ mm to １５ mm)
Rice Amount Adjustable Range	1.4 oz. ～ 14.0 oz. (40 to 400 ｇ)
Seaweed Size Available	7.4in. x 4.2 in. ～ 8.4 in. (185mm x 105 mm to 210 mm)
Forming Capacity (Continuous Supply Operation)	
Cycle time	３．０ to ４．０ seconds
Forming capacity per hour	９００ to １２００ mats per hour
Hopper Capacity (Rice Amount)	Maximum: Approx. １８．１ lｂｓ.(８．２ kg)
Rice Supply	Automatic stirring supply (beltless) method
Rice Mat Thickness Adjustment Method	Motor drive method (Automatic setting)
Optional Functions	Heater function: equipped with a heater at the back of the Rice Guide Auto supply function: equipped with a function to automatically start operation after the rice mat is removed
Accessories	Pick Plate x 2
Optional Parts	Extension switch & extension cable (The switch can be used as a foot switch when connected to the extension cable.)
Fuse Capacity	2 amperes (A)
Power Cord	Grounding type Plug (9.8 ft. (3m) Cord) Inlet plug-in type

External Diagrams

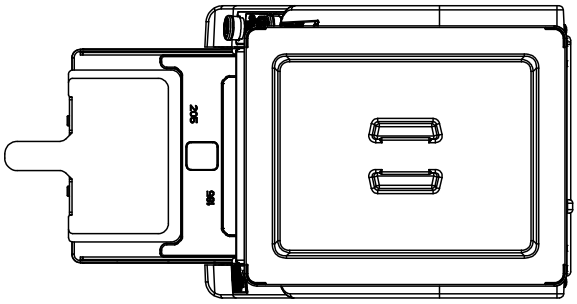

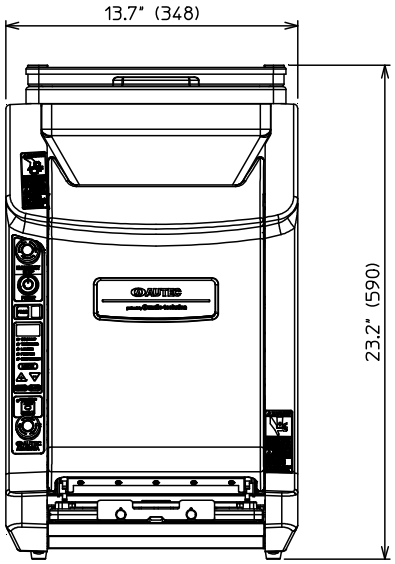

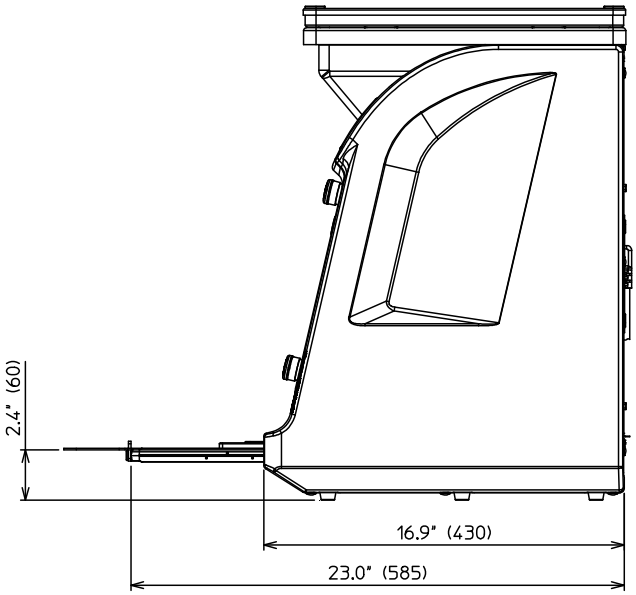

● Specifications and design of the machine are liable to change without prior notice for purposes of improvement.

Specifications

General Specifications

Name		Rice Sheet MACHINE
Model		SVR-NYA-EH
Dimensions		W360 X D550 X H640 mm
Weight		Approx. 36 kg or less (reference value)
Power Supply		AC 110V - 120V
Power Consumption		70W
Rated Frequency		50/60Hz
Power Cord		A UL/CSA approved power supply cord set shall be used. Type STO, 60 C, VW-1, 3Cx16AWG, rated 300V, 2 mm finished length min, with molded-on attachment plug NEMA5-15p.
Hopper Capacity		7.5kg (Approximately 2.5 "shou"*3)
Number of Roll Sizes		6 Settable Patterns
Rice Amount*1	Thin Roll	Approx. 80g
	Medium Roll	Approx. 140g
	Thick Roll	Approx. 285g
Performance*2	Thin Roll	Approx. 950 rolls/hour
	Medium Roll	Approx. 850 rolls/hour
	Thick Roll	Approx. 750 rolls/hour

Operation Environment (items prepared by the customer)	Installation Site	Indoors
	Condition of Installation	On a flat counter or table, where the top surface is not slippery.
	Ambient Air Temperature	Between 5℃ and 35℃ Under the condition of no dew condensations on any point of the machine surface.
	Relative Humidity	Between 30% and 85%
	Atmosphere Environment	No dust No corrosive gas

*1 The default value is adjustable. The value depends on the settings of length, thickness, and density of rice.

*2 Handling time of filling, 3 seconds for each roll, is included.

*3 "shou" is a Japanese measurement unit for the amount of dried rice. The weight of cooked rice is to be about 3 kg for 1 "shou". 7.5kg of sushi rice corresponds to 12.5L (liters).

Note!

- Place the machine on a flat surface. If the machine is placed on an inclined plane, it cannot work enough as shown in Specifications.

SUZUMO
WE LOVE RICE

Next Generation

Rice Sheet Making Machine

SVS-FCA

High Performance & User Friendly

High Quality!

Suzumo original technology enables you to get excellent quality

High Productivity!

1,250 rice sheets per hour
*Double sheets supply mode

High Capacity!

Max. 10kg of cooked rice

Easy Set Up!

17% smaller than conventional model

Easy Operation!

Only a few steps to make rice sheet

Easy Maintenance!

5% fewer parts than conventional model

How to make

Option

Pick-up Plate

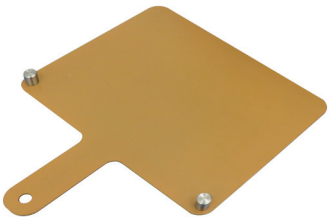

Menu

Small Roll

Large Roll

Uramaki Roll

Hand Roll

Dimensions

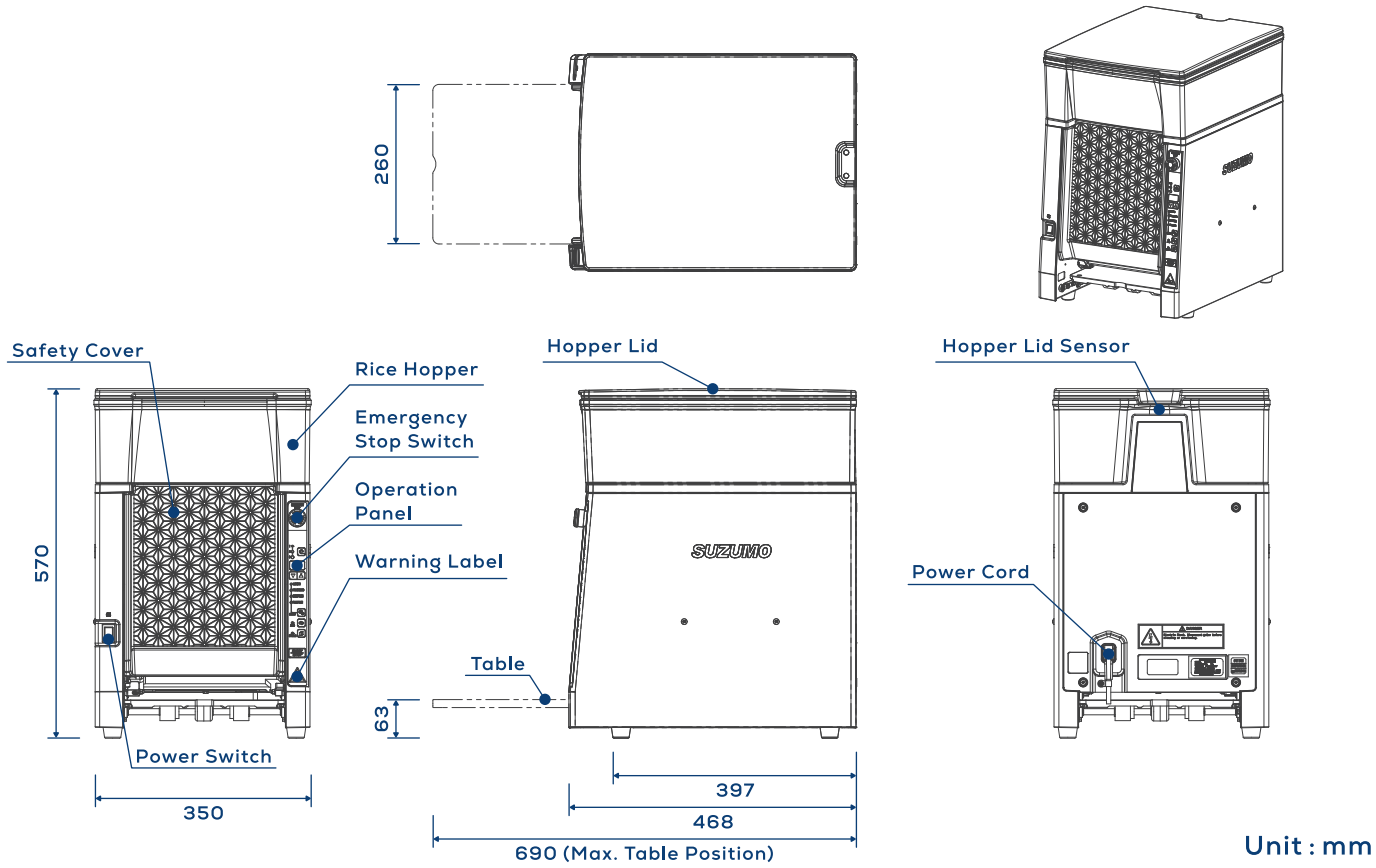

Specifications

Model	SVS-FCA-EH (UL/NSF standards certified) SVS-FCA (CE & UKCA certification declared)
Input	AC110-120V (SVS-FCA-EH) AC220-240V (SVS-FCA) 50/60Hz
Power Rating	100W (SVS-FCA-EH) 110VA (SVS-FCA)
Capacity	Small roll: 1,250 sheets/hr (Thickness 7mm, Length 80mm, Double Mode) Medium roll: 1,000 sheets/hr (Thickness 8mm, Length 110mm, Double Mode) Large roll: 750 sheets/hr (Thickness 12mm, Length 160mm)

Hopper Capacity	Approx. 10kg of cooked rice
Weight	31kg
Dimensions	350W×468D×570Hmm (Table closed) 350W×690D×570Hmm (Max. table position)
Rice Amount	Approx. 70-300g
Power Cable	Approx. 2m
Functions	Double sheets supply mode Automatic supply mode 3 sizes can be memorized

*Designs and specifications are subject to change without notice.
*While capacity expresses the machine`s performance capabilities, it is predicated upon the machine being operated correctly.

Contact Us

Suzumo Machinery Co., Ltd.

Global Business Division
Tel. +81 3-3993-1407
e-mail overseas@suzumo.co.jp

Visit Our Website

https://www.suzumokikou.com

Contact in North America
Suzumo International Corporation

Head Office (CA) : Tel. +1 310-328-0400
East Office (NJ) : Tel. +1 201-568-1900
e-mail sic@suzumokikou.com

Contact in Singapore
Suzumo Singapore Corporation Pte. Ltd.

Tel. +65 6254-2080
e-mail sales@suzumo-sg.com

Always Leading - Always Innovating

mG-T Scales

Revolutionize Your Retail POS with the mG-T Scale Line

Star is proud to offer its mG-T line of point-of-sale (POS) scales, with NTEP and Measurement Canada-certified scales delivering Class III precision in weight measurement. The mG-T series is effortless to set up, pairing seamlessly to your POS system through Bluetooth, USB*, or Serial connectivity. With easy integration using Star's SDK, these scales are compatible with iOS, Android, and Windows platforms.

Designed with value in mind, the mG-T scales are engineered to simplify your POS operations while elevating the customer experience. They are perfectly suited for the grocery sector, ideal for weighing produce, deli items, salad bar offerings, and bulk commodities like grains, nuts, dried fruits, candies, coffee, tea, and more. Beyond grocery, the mG-T series finds its place in eCommerce setups and the cannabis industry, serving roles from cultivation to packaging larger quantities by weight.

The mG-T series stands out as reliable, accurate, and user-friendly solutions, catering to a diverse range of business needs. By optimizing POS operations and enhancing customer satisfaction, these scales are an invaluable asset for businesses looking to streamline their processes and improve service quality.

To further improve its functionality, an optional backlit pole display is offered for the mG-T UDB series connecting through the serial port to prominently display the weight in kilograms, ounces, or pounds. Powered directly by the scale, this display mirrors the scale's own display, providing accuracy and versatility in customer interactions.

Cannabis Ready!

Key Features:

- NTEP and Measurement Canada Certified
- Class III Accuracy
- Connect to Windows, Android, and iOS
- Serial, USB*, & Bluetooth Connectivity
- Large 13.5"x10.4" Platter Size
- Backlit LCD Screen
- Auto-Power Off
- Convenient pole display available for UDB models (optional)

*Connectivity varies by model

mG-T Scales

Always Leading - Always Innovating

	mG-T12	mG-T30	mG-T60
Model Name Suffix	T12 / T12UDB	T30 / T30UDB	T60 / T60UDB
Interface	mG-T : Serial RS-232 and Bluetooth (BLE) mG-T UDB: Serial RS-232, USB-C, and Bluetooth (BLE)		
Markets	Ideal for grocery, mailrooms, delis, salad bars, bulk sales of any kind, certain eCommerce applications and cannabis cultivation and preparation.		
Platter Size	13.5”x10.4”		
Class	Class III		
Software Support	mG Series SDK for iOS & Android Data Output Tool for Windows OPOS Register for Windows		
Certifications	NTEP and Measurement Canada Certified		
Minimum Capacity	0.04lbs, 20g, 1oz	0.1lbs, 40g, 2oz	0.2lbs, 100g, 4oz
Maximum Capacity	12 lbs, 6kg, 192oz	30lbs, 12kg, 480oz	60lbs, 30kg, 960oz
Intended Uses:	Retail POS and Mailroom	Retail POS, Shipping, Mailroom, Food Service	Shipping, Mailroom, Retail POS, Food Service, Cannabis Growers
Readability	0.002lb, 0.001 kg, 0.05oz	0.005lb, 0.002 kg, 0.1oz	0.01lb, 0.005 kg, 0.2oz
What’s Included	mG-T: Power supply, serial cable, user manual mG-T UDB: USB power adaptor, serial cable, USB-A to USB-C cable, and user manual		
Power Bank Compatible	mG-T UDB Only: Scale: 5V; 55 mA Scale and External Display: 5V; 110 mA		

Clear Viewing with the mG-T UDB Pole Display

Key Benefits:
Dual Visibility: Ensures easy reading for both operators and customers.
Energy Efficient: Draws power directly from the scale, simplifying use.
Enhanced Readability: Provides clear, high-contrast display in any setting.

Note: The pole display is only compatible with the mG-T UDB series scales.

Models	Part Numbers
mG-T12	37950460
mG-T30	37950480
mG-T60	37950500
Pole Display	37951000
mG-T12UDB	37950470
mG-T30UDB	37950490
mG-T60UDB	37950510

Included with Optional Pole Display:

- Pole display
- Stainless-steel pole
- Bottom bracket
- 4 screws
- Plastic cover
- Installation instructions
- Power Bank

Copyright © 2026 Star Micronics America, Inc. All rights reserved. Star Micronics and the Star Logo are trademarks of Star Micronics America, Inc.

(848) 216-3300 | www.starmicronics.com | sales@starmicronics.com

EFFECTIVE DATES

State Effective Dates

The following states have franchise laws that require that the Franchise Disclosure Document be registered or filed with the state, or be exempt from registration: California, Hawaii, Illinois, Indiana, Maryland, Michigan, Minnesota, New York, North Dakota, Rhode Island, South Dakota, Virginia, Washington, and Wisconsin.

This document is effective and may be used in the following states, where the document is filed, registered or exempt from registration, as of the Effective Date stated below:

State	Effective Date
California	Exempt
Hawaii	Pending
Illinois	Exempt
Indiana	Pending
Maryland	Exempt
Michigan	Pending
Minnesota	Pending
New York	Exempt
North Dakota	Pending
Rhode Island	Pending
South Dakota	Pending
Virginia	Exempt
Washington	Pending
Wisconsin	Pending

Other states may require registration, filing, or exemption of a franchise under other laws, such as those that regulate the offer and sale of business opportunities or seller-assisted marketing plans.

EXHIBIT R

RECEIPTS

RECEIPT
(Franchisee's Copy)

This disclosure document summarizes provisions of the franchise agreement and other information in plain language. Read this disclosure document and all agreements carefully.

If AFC offers you a franchise, AFC must provide this disclosure document to you 14 calendar-days before you sign a binding agreement with, or make a payment to, the franchisor or an affiliate in connection with the proposed franchise sale.

New York requires that we give you this disclosure document at the earlier of the first personal meeting or 10 business days before the execution of the franchise or other agreement or the payment of any consideration that relates to the franchise relationship. Michigan requires that we give you this disclosure document at least 10 business days before the execution of any binding franchise or other agreement or the payment of any consideration that relates to the franchise relationship, whichever occurs first.

If AFC does not deliver this disclosure document on time or if it contains a false or misleading statement, or a material omission, a violation of federal and state law may have occurred and should be reported to the Federal Trade Commission, Washington D.C. 20580 and the state administrator listed in Exhibit N to the disclosure document.

The name, principal business address and phone number of each franchise seller offering the franchise is:

Franchisor:

Advanced Fresh Concepts Franchise Corp.
19700 Mariner Avenue
Torrance, California 90503
Telephone: 310-604-3200
info@afcsushi.com
www.afcsushi.com

Franchise Seller:

Name of Individual(s) selling on behalf of Franchisor:
_____
_____
_____
Advanced Fresh Concepts Franchise Corp.
19700 Mariner Avenue
Torrance, California 90503
Telephone: 310-604-3200

Issuance Date: July 31, 2026.

We authorize Incorp Services, Inc. 5716 Corsa Avenue, Suite 110, Westlake Village, California 91362-7354 to receive service of process for us or see Exhibit N if you are located outside California.

I received a Disclosure Document dated July 31, 2026, that included the following Exhibits:

A.	Financial Statements	J.	Food Service Counter Transfer Agreement
B.	Franchise Application	K.	Promissory Note
C.	Franchise Agreement	L.	Table of Contents of Manuals
D.	Full-Time Location Franchise Addendum	M.	List of Franchisees, Company Owned Locations, Transfers, Terminations, Non-Renewals, Ceased Operations/Other in our Last Fiscal Year
E.	Part-Time Location Franchise Addendum	N.	List of State Administrators and Agents for Service of Process
F.	Self-Service Location Addendum	O.	State Specific Addenda
G.	General Release	P.	Confidentiality Agreement
H.	Assignment of Franchise Agreement and Franchisor Consent	Q.	Tablet and Rice Sheeter Specifications
I.	Asset Sale and Purchase Agreement	R.	Receipts

Date: _____

_____
PROSPECTIVE FRANCHISEE'S SIGNATURE

_____
(Print Name)

Keep This Copy for Your Records.

RECEIPT
(Franchisor's Copy)

This disclosure document summarizes provisions of the franchise agreement and other information in plain language. Read this disclosure document and all agreements carefully.

If AFC offers you a franchise, AFC must provide this disclosure document to you 14 calendar-days before you sign a binding agreement with, or make a payment to, the franchisor or an affiliate in connection with the proposed franchise sale.

New York requires that we give you this disclosure document at the earlier of the first personal meeting or 10 business days before the execution of the franchise or other agreement or the payment of any consideration that relates to the franchise relationship. Michigan requires that we give you this disclosure document at least 10 business days before the execution of any binding franchise or other agreement or the payment of any consideration that relates to the franchise relationship, whichever occurs first.

If AFC does not deliver this disclosure document on time or if it contains a false or misleading statement, or a material omission, a violation of federal and state law may have occurred and should be reported to the Federal Trade Commission, Washington D.C. 20580 and the state administrator listed in Exhibit N to the disclosure document.

The name, principal business address and phone number of each franchise seller offering the franchise is:

Franchisor:

Advanced Fresh Concepts Franchise Corp.
19700 Mariner Avenue
Torrance, California 90503
Telephone: 310-604-3200
info@afcsushi.com
www.afcsushi.com

Franchise Seller:

Name of Individual(s) selling on behalf of Franchisor:
_____
_____
_____
Advanced Fresh Concepts Franchise Corp.
19700 Mariner Avenue
Torrance, California 90503
Telephone: 310-604-3200

Issuance Date: July 31, 2026.

We authorize Incorp Services, Inc. 5716 Corsa Avenue, Suite 110, Westlake Village, California 91362-7354 to receive service of process for us or see Exhibit N if you are located outside California.

I received a Disclosure Document dated July 31, 2026, that included the following Exhibits:

A.	Financial Statements	J.	Food Service Counter Transfer Agreement
B.	Franchise Application	K.	Promissory Note
C.	Franchise Agreement	L.	Table of Contents of Manuals
D.	Full-Time Location Franchise Addendum	M.	List of Franchisees, Company Owned Locations, Transfers, Terminations, Non-Renewals, Ceased Operations/Other in our Last Fiscal Year
E.	Part-Time Location Franchise Addendum	N.	List of State Administrators and Agents for Service of Process
F.	Self-Service Location Addendum	O.	State Specific Addenda
G.	General Release	P.	Confidentiality Agreement
H.	Assignment of Franchise Agreement and Franchisor Consent	Q.	Tablet and Rice Sheeter Specifications
I.	Asset Sale and Purchase Agreement	R.	Receipts

Date: _____

_____
PROSPECTIVE FRANCHISEE'S SIGNATURE

_____
(Print Name)

Return this copy to us.